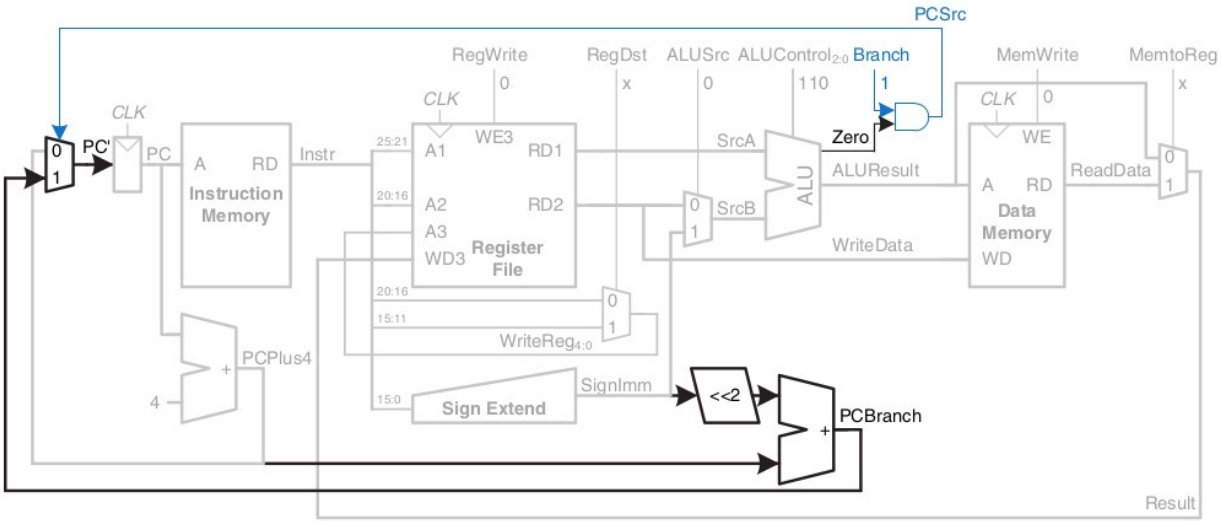
PCSrc
RegWrite
RegDst
ALUSrc
ALUControl2:0
Branch
MemWrite
MemtoReg
CLK
PC'
PC
A
RD
Instruction Memory
Instr
25:21
20:16
15:11
15:0
A1
A2
A3
WD3
WE3
RD1
RD2
Register File
SrcA
SrcB
ALU
Zero
ALUResult
WriteData
WE
Data Memory
WD
ReadData
WriteReg4:0
PCPlus4
4
Sign Extend
SignImm
<<2
PCBranch
Result

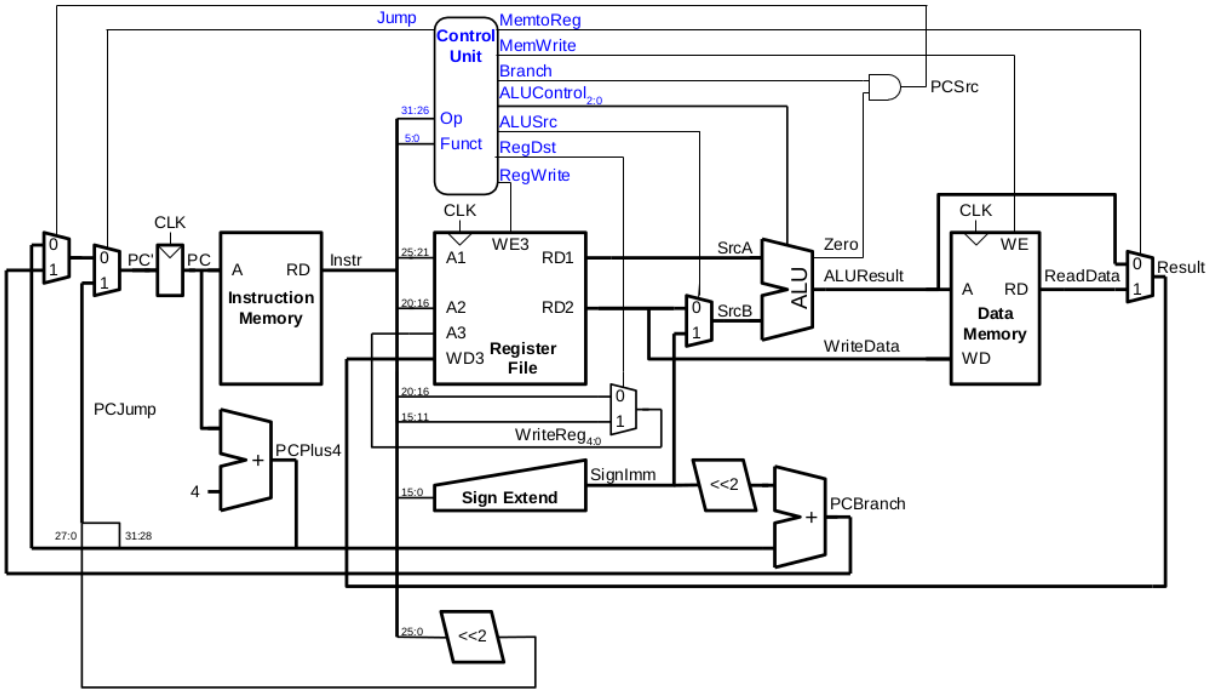
Jump
Control Unit
MemtoReg
MemWrite
Branch
ALUControl2:0
ALUSrc
RegDst
RegWrite
Op
Funct
31:26
5:0
PCSrc
CLK
PC'
PC
A
RD
Instruction Memory
Instr
25:21
20:16
15:11
15:0
A1
A2
A3
WD3
WE3
RD1
RD2
Register File
SrcA
SrcB
ALU
Zero
ALUResult
WriteData
WE
Data Memory
WD
ReadData
Result
PCJump
PCPlus4
4
WriteReg4:0
Sign Extend
SignImm
<<2
PCBranch
27:0
31:28
25:0