Task 1- Installing Requirements

```
!pip install --quiet cirq
!pip install qiskit
!pip install pylatexenc
```

```
   ━━━━━━━━━━━━━━━━━━━━━━━━━━━━━━━━━━━━━━━━ 69.3/69.3 kB 5.3 MB/s eta 0:00:00
   ━━━━━━━━━━━━━━━━━━━━━━━━━━━━━━━━━━━━━━━━ 596.5/596.5 kB 35.5 MB/s eta 0:00:00
   ━━━━━━━━━━━━━━━━━━━━━━━━━━━━━━━━━━━━━━━━ 18.3/18.3 MB 100.5 MB/s eta 0:00:00
   ━━━━━━━━━━━━━━━━━━━━━━━━━━━━━━━━━━━━━━━━ 294.6/294.6 kB 24.9 MB/s eta 0:00:00
   ━━━━━━━━━━━━━━━━━━━━━━━━━━━━━━━━━━━━━━━━ 203.2/203.2 kB 16.3 MB/s eta 0:00:00
   ━━━━━━━━━━━━━━━━━━━━━━━━━━━━━━━━━━━━━━━━ 53.0/53.0 kB 5.0 MB/s eta 0:00:00
   ━━━━━━━━━━━━━━━━━━━━━━━━━━━━━━━━━━━━━━━━ 6.5/6.5 MB 93.2 MB/s eta 0:00:00
   ━━━━━━━━━━━━━━━━━━━━━━━━━━━━━━━━━━━━━━━━ 2.3/2.3 MB 76.9 MB/s eta 0:00:00
   ━━━━━━━━━━━━━━━━━━━━━━━━━━━━━━━━━━━━━━━━ 2.7/2.7 MB 29.2 MB/s eta 0:00:00
   ━━━━━━━━━━━━━━━━━━━━━━━━━━━━━━━━━━━━━━━━ 1.7/1.7 MB 63.2 MB/s eta 0:00:00
   ━━━━━━━━━━━━━━━━━━━━━━━━━━━━━━━━━━━━━━━━ 117.7/117.7 kB 10.2 MB/s eta 0:00:00
   ━━━━━━━━━━━━━━━━━━━━━━━━━━━━━━━━━━━━━━━━ 739.1/739.1 kB 47.5 MB/s eta 0:00:00
  Building wheel for rpcq (setup.py) ... done
Collecting qiskit
  Downloading qiskit-1.4.2-cp39-abi3-manylinux_2_17_x86_64.manylinux2014_x86_64.whl.metadata (12 kB)
Collecting rustworkx>=0.15.0 (from qiskit)
  Downloading rustworkx-0.16.0-cp39-abi3-manylinux_2_17_x86_64.manylinux2014_x86_64.whl.metadata (10 kB)
Requirement already satisfied: numpy<3,>=1.17 in /usr/local/lib/python3.11/dist-packages (from qiskit) (1.26.4)
Requirement already satisfied: scipy>=1.5 in /usr/local/lib/python3.11/dist-packages (from qiskit) (1.14.1)
Requirement already satisfied: sympy>=1.3 in /usr/local/lib/python3.11/dist-packages (from qiskit) (1.13.1)
Collecting dill>=0.3 (from qiskit)
  Downloading dill-0.3.9-py3-none-any.whl.metadata (10 kB)
Requirement already satisfied: python-dateutil>=2.8.0 in /usr/local/lib/python3.11/dist-packages (from qiskit) (2.8.2)
Collecting stevedore>=3.0.0 (from qiskit)
  Downloading stevedore-5.4.1-py3-none-any.whl.metadata (2.3 kB)
Requirement already satisfied: typing-extensions in /usr/local/lib/python3.11/dist-packages (from qiskit) (4.12.2)
Collecting symengine<0.14,>=0.11 (from qiskit)
  Downloading symengine-0.13.0-cp311-cp311-manylinux_2_17_x86_64.manylinux2014_x86_64.whl.metadata (1.2 kB)
Requirement already satisfied: six>=1.5 in /usr/local/lib/python3.11/dist-packages (from python-dateutil>=2.8.0->qiskit)
Collecting pbr>=2.0.0 (from stevedore>=3.0.0->qiskit)
  Downloading pbr-6.1.1-py2.py3-none-any.whl.metadata (3.4 kB)
Requirement already satisfied: mpmath<1.4,>=1.1.0 in /usr/local/lib/python3.11/dist-packages (from sympy>=1.3->qiskit) (
Requirement already satisfied: setuptools in /usr/local/lib/python3.11/dist-packages (from pbr>=2.0.0->stevedore>=3.0.0-
Downloading qiskit-1.4.2-cp39-abi3-manylinux_2_17_x86_64.manylinux2014_x86_64.whl (6.8 MB)
   ━━━━━━━━━━━━━━━━━━━━━━━━━━━━━━━━━━━━━━━━ 6.8/6.8 MB 17.5 MB/s eta 0:00:00
Downloading dill-0.3.9-py3-none-any.whl (119 kB)
   ━━━━━━━━━━━━━━━━━━━━━━━━━━━━━━━━━━━━━━━━ 119.4/119.4 kB 10.2 MB/s eta 0:00:00
Downloading rustworkx-0.16.0-cp39-abi3-manylinux_2_17_x86_64.manylinux2014_x86_64.whl (2.1 MB)
   ━━━━━━━━━━━━━━━━━━━━━━━━━━━━━━━━━━━━━━━━ 2.1/2.1 MB 67.8 MB/s eta 0:00:00
Downloading stevedore-5.4.1-py3-none-any.whl (49 kB)
   ━━━━━━━━━━━━━━━━━━━━━━━━━━━━━━━━━━━━━━━━ 49.5/49.5 kB 5.0 MB/s eta 0:00:00
Downloading symengine-0.13.0-cp311-cp311-manylinux_2_17_x86_64.manylinux2014_x86_64.whl (49.7 MB)
   ━━━━━━━━━━━━━━━━━━━━━━━━━━━━━━━━━━━━━━━━ 49.7/49.7 MB 9.7 MB/s eta 0:00:00
Downloading pbr-6.1.1-py2.py3-none-any.whl (108 kB)
   ━━━━━━━━━━━━━━━━━━━━━━━━━━━━━━━━━━━━━━━━ 109.0/109.0 kB 9.2 MB/s eta 0:00:00
Installing collected packages: symengine, rustworkx, pbr, dill, stevedore, qiskit
Successfully installed dill-0.3.9 pbr-6.1.1 qiskit-1.4.2 rustworkx-0.16.0 stevedore-5.4.1 symengine-0.13.0
Collecting pylatexenc
  Downloading pylatexenc-2.10.tar.gz (162 kB)
     ━━━━━━━━━━━━━━━━━━━━━━━━━━━━━━━━━━━━━━━━ 162.6/162.6 kB 5.2 MB/s eta 0:00:00
  Preparing metadata (setup.py) ... done
Building wheels for collected packages: pylatexenc
  Building wheel for pylatexenc (setup.py) ... done
  Created wheel for pylatexenc: filename=pylatexenc-2.10-py3-none-any.whl size=136816 sha256=9e33e364bd66db7d50e0288e432
  Stored in directory: /root/.cache/pip/wheels/b1/7a/33/9fdd892f784ed4afda62b685ae3703adf4c91aa0f524c28f03
Successfully built pylatexenc
Installing collected packages: pylatexenc
Successfully installed pylatexenc-2.10
```

Task 1 - Required Imports (Run Before Task-1 Part-1 and 2)

Cirq:

```
import cirq
import cirq_google
from cirq.contrib.svg import SVGCircuit
```

Qiskit:

```
from qiskit.circuit import QuantumCircuit, Parameter
```

Misc:

```
import numpy as np
import pylatexenc
import matplotlib
```

Task 1 - Part 1 (Using Cirq)

```
qubits=[cirq.LineQubit(i) for i in range(5)] #I am using line qubits. Here I am creating them and storing them in a list


circuit=cirq.Circuit() #creating empty circuit
circuit.append(cirq.H.on_each(qubits))                #Applying hadamard on all of them

circuit.append([cirq.CNOT(qubits[0],qubits[1]),       #Here I am appending a list of CNOT gate objects to the circuit. Each (
                cirq.CNOT(qubits[1],qubits[2]),
                cirq.CNOT(qubits[2],qubits[3]),
                cirq.CNOT(qubits[3],qubits[4])])

circuit.append(cirq.SWAP(qubits[0],qubits[4]))        #This is the swap gate for first and last qubit

circuit.append(cirq.rx(np.pi/2)(qubits[3]))           #Here I am applying the rx gate i.e. rotate about x-axis gate.

SVGCircuit(circuit)                                   #I have used SVGCircuit for showing a good picture of the circuit. Howe
```

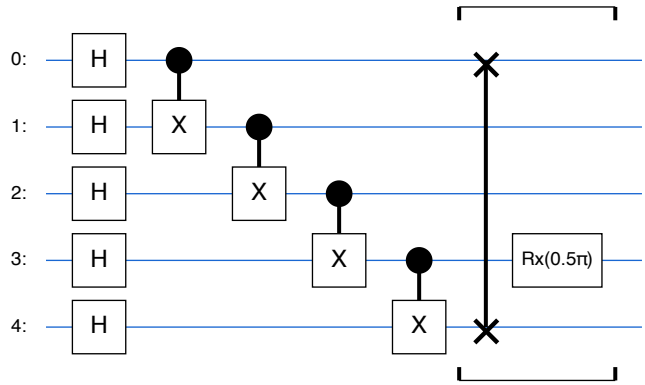

Task 1- Part 2 (Using Qiskit)

```
circuit=QuantumCircuit(5,1)
circuit.h([0,2,3,4])      #Applying hadamard to first, third and fourth qubit. We laso applied it to the 5th qubit as we are
circuit.rx(np.pi/3,1)     #rotating second qubit by pi/3 around X
circuit.cswap(4,0,2)      #Fredkin on 1st and 3rd with last qubit as control
circuit.cswap(4,1,3)      #Fredkin on 2nd and 4th with last qubit as control
circuit.h(4)              #Applying hadamard on ancilla again
circuit.measure(4,0)      #measuring ancilla (Greater probability of 0 means greater similarity. We can find probability thr
print(circuit)
#Here we can also use circuit.draw('mpl') for a beautified version
```

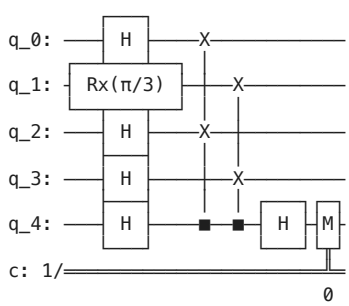

Task-2 Installing Requirements (Run before going to Task 2- Required Imports)

```
!pip install energyflow          #for loading quark-gluon data
!pip install torch
!pip install torch-geometric
!pip install torch-cluster       #this might take 10-15 mins to install. Ateast that was the case on colab
!pip install scikit-learn
```

```
  Attempting uninstall: nvidia-cusparse-cu12
    Found existing installation: nvidia-cusparse-cu12 12.5.1.3
    Uninstalling nvidia-cusparse-cu12-12.5.1.3:
      Successfully uninstalled nvidia-cusparse-cu12-12.5.1.3
  Attempting uninstall: nvidia-cudnn-cu12
    Found existing installation: nvidia-cudnn-cu12 9.3.0.75
    Uninstalling nvidia-cudnn-cu12-9.3.0.75:
      Successfully uninstalled nvidia-cudnn-cu12-9.3.0.75
  Attempting uninstall: nvidia-cusolver-cu12
    Found existing installation: nvidia-cusolver-cu12 11.6.3.83
    Uninstalling nvidia-cusolver-cu12-11.6.3.83:
      Successfully uninstalled nvidia-cusolver-cu12-11.6.3.83
Successfully installed nvidia-cublas-cu12-12.4.5.8 nvidia-cuda-cupti-cu12-12.4.127 nvidia-cuda-nvrtc-cu12-12.4.127 nvidi
Collecting torch-geometric
  Downloading torch_geometric-2.6.1-py3-none-any.whl.metadata (63 kB)
     ━━━━━━━━━━━━━━━━━━━━━━━━━━━━━━━━━━━━━━━━ 63.1/63.1 kB 2.8 MB/s eta 0:00:00
Requirement already satisfied: aiohttp in /usr/local/lib/python3.11/dist-packages (from torch-geometric) (3.11.14)
Requirement already satisfied: fsspec in /usr/local/lib/python3.11/dist-packages (from torch-geometric) (2025.3.0)
Requirement already satisfied: jinja2 in /usr/local/lib/python3.11/dist-packages (from torch-geometric) (3.1.6)
Requirement already satisfied: numpy in /usr/local/lib/python3.11/dist-packages (from torch-geometric) (1.26.4)
Requirement already satisfied: psutil>=5.8.0 in /usr/local/lib/python3.11/dist-packages (from torch-geometric) (5.9.5)
Requirement already satisfied: pyparsing in /usr/local/lib/python3.11/dist-packages (from torch-geometric) (3.2.1)
Requirement already satisfied: requests in /usr/local/lib/python3.11/dist-packages (from torch-geometric) (2.32.3)
Requirement already satisfied: tqdm in /usr/local/lib/python3.11/dist-packages (from torch-geometric) (4.67.1)
Requirement already satisfied: aiohappyeyeballs>=2.3.0 in /usr/local/lib/python3.11/dist-packages (from aiohttp->torch-g
Requirement already satisfied: aiosignal>=1.1.2 in /usr/local/lib/python3.11/dist-packages (from aiohttp->torch-geometri
Requirement already satisfied: attrs>=17.3.0 in /usr/local/lib/python3.11/dist-packages (from aiohttp->torch-geometric)
Requirement already satisfied: frozenlist>=1.1.1 in /usr/local/lib/python3.11/dist-packages (from aiohttp->torch-geometr
Requirement already satisfied: multidict<7.0,>=4.5 in /usr/local/lib/python3.11/dist-packages (from aiohttp->torch-geome
Requirement already satisfied: propcache>=0.2.0 in /usr/local/lib/python3.11/dist-packages (from aiohttp->torch-geometri
Requirement already satisfied: yarl<2.0,>=1.17.0 in /usr/local/lib/python3.11/dist-packages (from aiohttp->torch-geometr
Requirement already satisfied: MarkupSafe>=2.0 in /usr/local/lib/python3.11/dist-packages (from jinja2->torch-geometric)
Requirement already satisfied: charset-normalizer<4,>=2 in /usr/local/lib/python3.11/dist-packages (from requests->torch
Requirement already satisfied: idna<4,>=2.5 in /usr/local/lib/python3.11/dist-packages (from requests->torch-geometric)
Requirement already satisfied: urllib3<3,>=1.21.1 in /usr/local/lib/python3.11/dist-packages (from requests->torch-geome
Requirement already satisfied: certifi>=2017.4.17 in /usr/local/lib/python3.11/dist-packages (from requests->torch-geome
Downloading torch_geometric-2.6.1-py3-none-any.whl (1.1 MB)
   ━━━━━━━━━━━━━━━━━━━━━━━━━━━━━━━━━━━━━━━━ 1.1/1.1 MB 29.3 MB/s eta 0:00:00
Installing collected packages: torch-geometric
Successfully installed torch-geometric-2.6.1
Collecting torch-cluster
  Downloading torch_cluster-1.6.3.tar.gz (54 kB)
     ━━━━━━━━━━━━━━━━━━━━━━━━━━━━━━━━━━━━━━━━ 54.5/54.5 kB 3.5 MB/s eta 0:00:00
  Preparing metadata (setup.py) ... done
Requirement already satisfied: scipy in /usr/local/lib/python3.11/dist-packages (from torch-cluster) (1.14.1)
Requirement already satisfied: numpy<2.3,>=1.23.5 in /usr/local/lib/python3.11/dist-packages (from scipy->torch-cluster)
Building wheels for collected packages: torch-cluster
  Building wheel for torch-cluster (setup.py) ... done
  Created wheel for torch-cluster: filename=torch_cluster-1.6.3-cp311-cp311-linux_x86_64.whl size=2057700 sha256=7e82e35
  Stored in directory: /root/.cache/pip/wheels/ef/de/7d/a4211822af99147b93800e9e204f0be21294e3c0b95b3b861a
Successfully built torch-cluster
Installing collected packages: torch-cluster
Successfully installed torch-cluster-1.6.3
Requirement already satisfied: scikit-learn in /usr/local/lib/python3.11/dist-packages (1.6.1)
Requirement already satisfied: numpy>=1.19.5 in /usr/local/lib/python3.11/dist-packages (from scikit-learn) (1.26.4)
Requirement already satisfied: scipy>=1.6.0 in /usr/local/lib/python3.11/dist-packages (from scikit-learn) (1.14.1)
Requirement already satisfied: joblib>=1.2.0 in /usr/local/lib/python3.11/dist-packages (from scikit-learn) (1.4.2)
Requirement already satisfied: threadpoolctl>=3.1.0 in /usr/local/lib/python3.11/dist-packages (from scikit-learn) (3.6.
```

Task-2 Required Imports (Run before running the Task-2 Graph Based ...)

```
import torch
import torch.nn as nn
from torch.nn import functional
from torch_geometric.loader import DataLoader
from torch_geometric.data import Data
from torch_geometric.nn import global_mean_pool, global_max_pool, GATConv, EdgeConv
from sklearn.model_selection import train_test_split
from torch_cluster import knn_graph
import energyflow
```

Task-2 Graph Based Quark-Gluon Classification Architectures

The objective of task-2 is to explore two graph based architectures for classification of quarks and gluon jets in the dataset provided in the task.

I have chosen the following graph based architectures:

1. Graph Attention Networks (**GAT**)
2. Dynamic Graph Convolutional Neural Networks (**DGCNN**)

Before I explore these models, I would like to explain how I projected this dataset to a set of interconnected nodes and edges-

Each jet in the dataset has been considered as a graph (i.e set of interconnected nodes and edges). There are 100,000 jets in total. Thus we would have 100,000 graphs.

Every jet is a 2-D array in the dataset. It is an array of particles. Every particle in the jet is a 1-D array consisting of 4 features (pt, rapidity, azimuthal angle, and pdgid)

Thus I am considering every particle in the jet as a node inside the graph. The features are basically attributes of that node. Since features can vary over several orders of magnitude, I also normalize each feature which helps in stabilizing training and ensures that all features contribute comparably when computing distances. The dataset is also padded with zeros as particles for jets that have lesser than the maximum number of particles. However, these don't provide any information thus they are removed.

Now coming to edges, I constructed edges for each node by using the k-Nearest Neighbors approach. For every node, I connected it to its k-NN based on euclidean distance in the feature space. In the current case, using k=16 neighbors typically provides sufficient connectivity for the GAT or DGCNN to learn meaningful representations without overwhelming the model with too many edges.

Also, in the k-NN graph, I have not included self-loops (edges from a node to itself) since they do not provide additional relational information.

Additionaly, GAT uses a fixed (static) graph using the raw features. In case of DGCNN, the benefit is in dynamically recomputing the k-NN graph at each layer to capture evolving relationships as the node features get updated.

Once the nodes are processed by the network layers, I have applied global pooling to aggregate node-level information into a single, fixed-size graph-level representation. This aggregated vector is used for the final classification task.

The **create_graph_list** function below shows what I have written above.

It loads the data set as two arrays-

A 3-D array (X) of shape (N,M,d) where N is the number of jets, M is max number of particles per jet and d is the number of features per particle.

A 1-D array (Y) of the output labels (Quark/Gluon) for every jet

Then performs normalization, removing padding, k-NN graph finding. It returns a list of PyG objects which are basically jets wrapped up with their respective labels. Run the cell below to preprocess the dataset and get it into appropriate for running through the models

```
def create_graph_list(k):

    X,Y=energyflow.qg_jets.load(num_data=100000, pad=True, ncol=4, generator='pythia',with_bc=False, cache_dir='~/.energyflo

    data_list=[]

    for i in range(X.shape[0]):                                     #Iterating through the jets to create a graph for each
        x=torch.tensor(X[i], dtype=torch.float)                     # shape: (M, d)
        x=(x-x.mean(dim=0))/x.std(dim=0)                            #Normalizing the features across particles (for each fe
        mask=(x.abs().sum(dim=1)>1e-8)                              #Removing padded particles (all input features 0)
        x=x[mask]
        edge_index=knn_graph(x,k=k,loop=False)                      #Finds k-NN for every node/particle in the graph/jet in
        label=torch.tensor([Y[i]],dtype=torch.long)                 #I am wrapping the label as a tensor as well to add to
        data_list.append(Data(x=x,edge_index=edge_index,y=label))   #creating a PyG data object and appending it to a list

    return data_list
```

GAT:

GAT layers learn to weigh each neighbor's influence differently by computing attention scores. Multiple attention heads allow the model to capture different types of interactions. This is why I have chose GAT as one of my architectures as not all particles contribute equally to identifying a jet as quark- or gluon-initiated. GAT's attention mechanism lets the network focus more on the most informative particle interactions. The heads enable the network to learn various aspects of the relationships between particles, which is crucial given the complex structure of jets.

After processing through three GAT layers, I have used global mean pooling to aggregate node features into a single graph-level feature, which is then fed into a fully connected layer for classification.

Below is the implementation of the GAT. Please run the cell so that it can be used later.

```
class QG_GAT(nn.Module):

  def __init__(self, in_channels, hidden_channels, out_channels=2, heads=4):

    super().__init__()
    #3 processing layers
    self.layer_1=GATConv(in_channels, hidden_channels, heads=heads, concat=True)            #'heads' attention heads and th
    self.layer_2=GATConv(hidden_channels*heads, hidden_channels, heads=heads, concat=True)   #Thus input channels is hidden_
    self.layer_3=GATConv(hidden_channels*heads, hidden_channels, heads=1, concat=False)      #1 attention head only now ther

    self.fc=nn.Linear(hidden_channels, out_channels)                                         #maps to final outputs

  def forward(self, x, edge_index, batch):

    x=functional.elu(self.layer_1(x, edge_index))                                            #Applying GAT layers with ELU a
    x=functional.elu(self.layer_2(x, edge_index))
    x=functional.elu(self.layer_3(x, edge_index))

    x=global_mean_pool(x, batch)

    return self.fc(x)
```

DGCNN-

Instead of using a fixed graph, DGCNN recomputes the graph (using k-NN) at every layer. This means that after each layer, as the node features change, the graph's connectivity is updated accordingly. Thus, I used DGCNN the network learns, the optimal relationships between particles can change. DGCNN's dynamic graph construction allows the network to update these relationships at every layer, capturing higher-level, context-dependent interactions.

DGCNN uses EdgeConv layers that consider both a node and its neighbors. EdgeConv layers are particularly good at learning local structures, which is important because the spatial and energy distributions of particles in a jet are key to distinguishing between quark and gluon jets.

After several EdgeConv layers, global pooling (both max and mean) aggregates the node features into a graph-level feature vector, which is then passed through a fully connected layer to yield class scores.

Below is the implementation of the DGCNN. Please run the cell so that it can be used later.

```
class QG_DGCNN(nn.Module):

  def __init__(self, in_channels, hidden_channels, out_channels=2, k=16):

    super().__init__()
    self.k=k
    #4 processing layers
    self.conv_layer_1=EdgeConv(nn.Sequential(nn.Linear(2*in_channels, hidden_channels),nn.ReLU(), nn.Linear(hidden_channels,
    self.conv_layer_2=EdgeConv(nn.Sequential(nn.Linear(2*hidden_channels, hidden_channels), nn.ReLU(), nn.Linear(hidden_char
    self.conv_layer_3=EdgeConv(nn.Sequential(nn.Linear(2*hidden_channels, hidden_channels), nn.ReLU(), nn.Linear(hidden_char
    self.conv_layer_4=EdgeConv(nn.Sequential(nn.Linear(2*hidden_channels, hidden_channels), nn.ReLU(), nn.Linear(hidden_char

    self.conv_layer_list=[self.conv_layer_1, self.conv_layer_2, self.conv_layer_3, self.conv_layer_4]

    self.fc=nn.Linear(hidden_channels*2, out_channels)


  def forward(self, x, edge_index, batch):

    for layer in self.conv_layer_list:
      edge_index = knn_graph(x, k=self.k, batch=batch, loop=False)                 #Dynamically computing the k-NN graph bas
      x=layer(x, edge_index)                                                       #Updating the node features using the cur

    x_max=global_max_pool(x, batch)
    x_mean=global_mean_pool(x, batch)
    x=torch.cat([x_max, x_mean], dim=1)                                            #Concatenating both pooled representatior

    return self.fc(x)
```

Below are functions for training and testing. These are used for a single epoch and are iteratively run later in main() for multiple (20) epochs

Please run the cell so that they can be used later

```
def train_epoch(model, loader, optimizer, device):

    model.train()                                                  #Putting model in train mode
    total_loss=0
    for batch in loader:                                           #going through the batches here
        batch=batch.to(device)
        optimizer.zero_grad()                                      #I am clearing all previous gradient computations here
        forward=model(batch.x, batch.edge_index, batch.batch)      #Running the forward method in the given model here
        loss=functional.cross_entropy(forward, batch.y)            #Calculating cross entropy loss
```

```
        loss.backward()                                         #Backpropagation
        optimizer.step()                                        #Updating the parameters
        total_loss+=loss.item()*batch.num_graphs                #Loss for each batch is weighted with the number of graphs
    return total_loss/len(loader.dataset)                       #Returns the average loss per graph/jet for an epoch

def test_epoch(model, loader, device):

    model.eval()                                                #Putting model in evaluation mode
    correct=0
    for batch in loader:
        batch=batch.to(device)
        with torch.no_grad():                                   #Disabling gradient computation for evaluation
            forward=model(batch.x, batch.edge_index, batch.batch) #Running the forward method in the model here
            prediction=forward.argmax(dim=1)                    #Predicted class
            correct+=prediction.eq(batch.y).sum().item()        #Number of correctly predicted graphs
    return correct/len(loader.dataset)                          #Returning accuracy
```

Below is the main functions that trains and tests both these models on 'num_epochs' epochs. I am using 20 as num_epochs when I call main.

Please run the cell to train, test and generate best accuracy values when predicting with both models.

I only split the dataset into training and test sets for simplicity, but a validation set can be put in as well with a different split.

```
def main(num_epochs):

    device=torch.device('cuda' if torch.cuda.is_available() else 'cpu')          #Checking if MPS (as I am training on a MacB
    print(device) #Can be used for checking what device being used for training
    data_list=create_graph_list(k=16)                                                #I am using k as 16 for k-NN
    train_data,test_data=train_test_split(data_list, test_size=0.2, random_state=42)    #I have used a 80:20 split for traini

    train_loader=DataLoader(train_data, batch_size=32, shuffle=True)                 #I am doing batch processing here
    test_loader=DataLoader(test_data, batch_size=32, shuffle=False)                  #Each Batch contains 32 graphs/jets a

    in_channels=data_list[0].x.shape[1]                                              #Number of input freatures per partic

    gat_model=QG_GAT(in_channels, hidden_channels=64, out_channels=2, heads=4).to(device)   #Instance of our Quark Gluon GAT
    dgcnn_model=QG_DGCNN(in_channels, hidden_channels=64, out_channels=2, k=16).to(device)  #Instance of the DGCNN Classifier

    gat_optimizer=torch.optim.Adam(gat_model.parameters(), lr=1e-3)                     #I am using ADAM for training
    dgcnn_optimizer=torch.optim.Adam(dgcnn_model.parameters(), lr=1e-3)

    gat_best_accuracy, dgcnn_best_accuracy=0,0                                       #Starting Training and Testing here ov

    for epoch in range(num_epochs):

        gat_train_loss = train_epoch(gat_model, train_loader, gat_optimizer, device)
        gat_train_accuracy = test_epoch(gat_model, train_loader, device)
        gat_test_accuracy = test_epoch(gat_model, test_loader, device)

        dgcnn_train_loss = train_epoch(dgcnn_model, train_loader, dgcnn_optimizer, device)
        dgcnn_train_accuracy = test_epoch(dgcnn_model, train_loader, device)
        dgcnn_test_accuracy = test_epoch(dgcnn_model, test_loader, device)

        if gat_test_accuracy>gat_best_accuracy:
            gat_best_accuracy=gat_test_accuracy
            torch.save(gat_model.state_dict(), 'best_gat_model.pt')                  #Saving the best model parameters for

        if dgcnn_test_accuracy>dgcnn_best_accuracy:
            dgcnn_best_accuracy=dgcnn_test_accuracy
            torch.save(dgcnn_model.state_dict(), 'best_dgcnn_model.pt')

        print(f"Epoch: {epoch+1:02d}")
        print(f"GAT Loss: {gat_train_loss:.4f}, GAT Train Accuaracy: {gat_train_accuracy:.4f}, GAT Test Accuracy: {gat_test_a
        print(f"DGCNN Loss: {dgcnn_train_loss:.4f}, DGCNN Train Accuaracy: {dgcnn_train_accuracy:.4f}, DGCNN Test Accuracy: {
        print()

    print(f"\nTraining complete")
    print("Best GAT Accuracy:", gat_best_accuracy)
    print("Best DGCNN Accuracy:", dgcnn_best_accuracy)

if __name__=="__main__":
    main(num_epochs=20)
```

```
Epoch: 10
GAT Loss: 0.4806, GAT Train Accuaracy: 0.7764, GAT Test Accuracy: 0.7813
DGCNN Loss: 0.4653, DGCNN Train Accuaracy: 0.7908, DGCNN Test Accuracy: 0.7947

Epoch: 11
GAT Loss: 0.4804, GAT Train Accuaracy: 0.7791, GAT Test Accuracy: 0.7847
DGCNN Loss: 0.4637, DGCNN Train Accuaracy: 0.7871, DGCNN Test Accuracy: 0.7901

Epoch: 12
GAT Loss: 0.4796, GAT Train Accuaracy: 0.7795, GAT Test Accuracy: 0.7854
DGCNN Loss: 0.4625, DGCNN Train Accuaracy: 0.7877, DGCNN Test Accuracy: 0.7909

Epoch: 13
GAT Loss: 0.4793, GAT Train Accuaracy: 0.7784, GAT Test Accuracy: 0.7839
DGCNN Loss: 0.4615, DGCNN Train Accuaracy: 0.7899, DGCNN Test Accuracy: 0.7932

Epoch: 14
GAT Loss: 0.4790, GAT Train Accuaracy: 0.7795, GAT Test Accuracy: 0.7850
DGCNN Loss: 0.4592, DGCNN Train Accuaracy: 0.7868, DGCNN Test Accuracy: 0.7876

Epoch: 15
GAT Loss: 0.4792, GAT Train Accuaracy: 0.7786, GAT Test Accuracy: 0.7836
DGCNN Loss: 0.4584, DGCNN Train Accuaracy: 0.7922, DGCNN Test Accuracy: 0.7937

Epoch: 16
GAT Loss: 0.4785, GAT Train Accuaracy: 0.7782, GAT Test Accuracy: 0.7835
DGCNN Loss: 0.4567, DGCNN Train Accuaracy: 0.7933, DGCNN Test Accuracy: 0.7949

Epoch: 17
GAT Loss: 0.4785, GAT Train Accuaracy: 0.7798, GAT Test Accuracy: 0.7824
DGCNN Loss: 0.4556, DGCNN Train Accuaracy: 0.7862, DGCNN Test Accuracy: 0.7860

Epoch: 18
GAT Loss: 0.4775, GAT Train Accuaracy: 0.7786, GAT Test Accuracy: 0.7826
DGCNN Loss: 0.4549, DGCNN Train Accuaracy: 0.7958, DGCNN Test Accuracy: 0.7933

Epoch: 19
GAT Loss: 0.4773, GAT Train Accuaracy: 0.7786, GAT Test Accuracy: 0.7854
DGCNN Loss: 0.4531, DGCNN Train Accuaracy: 0.7944, DGCNN Test Accuracy: 0.7965

Epoch: 20
GAT Loss: 0.4775, GAT Train Accuaracy: 0.7763, GAT Test Accuracy: 0.7822
DGCNN Loss: 0.4530, DGCNN Train Accuaracy: 0.7965, DGCNN Test Accuracy: 0.7948


Training complete
Best GAT Accuracy: 0.78545
Best DGCNN Accuracy: 0.79655
```

Task-3

Inspired by my experience at the Yale Quantum Hackathon in April 2024, I spent that summer immersed in the IBM Quantum Platform and I started learning quantum computing. Since then, I have taken up coursework, done an internship project on Quantum Security, won two hackathons via quantum projects and I am also a research assistant at UConn exploring variational quantum algorithms like QAOA, and quantum key distribution protocols like BB84. Specifically in QAOA I am working with mixed binary optimization with ADMM formulations combined with QAOA. I have dived deep into the source code to do tasks such as sample filtering which is not available by default in the qiskit SDK. I am familiar with qiskit, cirq, and pennylane SDKs for development but I prefer qiskit and cirq as they seem more deterministic and intuitive to me.

My experiences so far have made me strongly interested in hybrid quantum-classical methods and their applications in complex optimization and pattern recognition tasks, which makes me particularly excited about the Q-MAML project.

Task 11: Installing Requirements

```
#All modules installed previously
#!pip install torch
!pip install --quiet cirq
```

```
     ━━━━━━━━━━━━━━━━━━━━━━━━━━━━━━━━━━━━━━━━ 61.0/61.0 kB 3.9 MB/s eta 0:00:00
     ━━━━━━━━━━━━━━━━━━━━━━━━━━━━━━━━━━━━━━━━ 45.6/45.6 kB 2.9 MB/s eta 0:00:00
  Preparing metadata (setup.py) ... done
    ━━━━━━━━━━━━━━━━━━━━━━━━━━━━━━━━━━━━━━━━ 1.9/1.9 MB 30.8 MB/s eta 0:00:00
    ━━━━━━━━━━━━━━━━━━━━━━━━━━━━━━━━━━━━━━━━ 532.7/532.7 kB 26.1 MB/s eta 0:00:00
    ━━━━━━━━━━━━━━━━━━━━━━━━━━━━━━━━━━━━━━━━ 60.5/60.5 kB 4.5 MB/s eta 0:00:00
    ━━━━━━━━━━━━━━━━━━━━━━━━━━━━━━━━━━━━━━━━ 69.3/69.3 kB 5.0 MB/s eta 0:00:00
    ━━━━━━━━━━━━━━━━━━━━━━━━━━━━━━━━━━━━━━━━ 596.5/596.5 kB 26.2 MB/s eta 0:00:00
    ━━━━━━━━━━━━━━━━━━━━━━━━━━━━━━━━━━━━━━━━ 18.3/18.3 MB 47.6 MB/s eta 0:00:00
    ━━━━━━━━━━━━━━━━━━━━━━━━━━━━━━━━━━━━━━━━ 294.6/294.6 kB 16.6 MB/s eta 0:00:00
    ━━━━━━━━━━━━━━━━━━━━━━━━━━━━━━━━━━━━━━━━ 203.2/203.2 kB 13.0 MB/s eta 0:00:00
    ━━━━━━━━━━━━━━━━━━━━━━━━━━━━━━━━━━━━━━━━ 53.0/53.0 kB 3.6 MB/s eta 0:00:00
```

```
━━━━━━━━━━━━━━━━━━━━━━━━━━━━━━━━━━━━━━━━ 6.5/6.5 MB 57.5 MB/s eta 0:00:00
━━━━━━━━━━━━━━━━━━━━━━━━━━━━━━━━━━━━━━━━ 2.3/2.3 MB 31.7 MB/s eta 0:00:00
━━━━━━━━━━━━━━━━━━━━━━━━━━━━━━━━━━━━━━━━ 2.7/2.7 MB 51.9 MB/s eta 0:00:00
━━━━━━━━━━━━━━━━━━━━━━━━━━━━━━━━━━━━━━━━ 1.7/1.7 MB 44.3 MB/s eta 0:00:00
━━━━━━━━━━━━━━━━━━━━━━━━━━━━━━━━━━━━━━━━ 117.7/117.7 kB 6.6 MB/s eta 0:00:00
━━━━━━━━━━━━━━━━━━━━━━━━━━━━━━━━━━━━━━━━ 739.1/739.1 kB 28.7 MB/s eta 0:00:00
Building wheel for rpcq (setup.py) ... done
```

Task 11: Required Imports

```
import torch
import torch.nn as nn
import torch.optim as optim
import cirq
import math
```

Task-11: Code

Hyperparameter Setup:

```
n_qubits = 4             #Using 4 qubits
n_params = 3 * n_qubits  # Each qubit has 3 rotation angles
n_samples = 50           # dataset size
n_epochs = 20            # training on 20 epochs
learning_rate = 0.02     # using lr = 0.02
eps = 1e-3               # finite-difference step size

input_dim = 5            # dimension of each input vector
hidden_dim = 16
output_dim = n_params    # MLP output: parameters for PQC
```

Circuits:

```
def build_circuit(params):
    """
    Build a 4-qubit circuit in Cirq applying single-qubit rotations
    and a chain of CNOTs, then measure the Z-expectation of qubit 0.
    """

    qubits = [cirq.LineQubit(i) for i in range(n_qubits)]  # Creating 4 linequbits


    reshaped = params.reshape(n_qubits, 3) # Converting params into shape (4, 3)
    # Each qubit i has 3 angles: (rX, rY, rZ) or we can do cirq.Rot, but let's just do separate rotations

    circuit = cirq.Circuit()

    # Single-qubit rotations
    for i in range(n_qubits):
        rx_angle, ry_angle, rz_angle = reshaped[i]
        circuit.append(cirq.rx(rx_angle)(qubits[i]))
        circuit.append(cirq.ry(ry_angle)(qubits[i]))
        circuit.append(cirq.rz(rz_angle)(qubits[i]))

    # Chain of CNOTs for entangling
    for i in range(n_qubits - 1):
        circuit.append(cirq.CNOT(qubits[i], qubits[i + 1]))

    return circuit, qubits

def run_circuit(params):
    """
    Construct and run the circuit, then return the expectation value of Z on qubit 0.
    """
    circuit, qubits = build_circuit(params)


    # We measure <Z> by appending a measurement in the computational basis in a simulation. For expectation using cirq's bui
    simulator = cirq.Simulator()
    result = simulator.simulate(circuit)
    final_state = result.final_state_vector   # final_state is a complex state vector of length 2^n_qubits

    # Expectation of Z on qubit 0 for state |psi> = sum_k alpha_k |k>.
    # |0>_Z -> amplitude indices that have 0 in the first qubit bit; |1>_Z -> those that have 1 in first qubit bit.
    # In general: <psi|Z_0|psi> = sum_{k} |alpha_k|^2 * z_k, where z_k = +1 if qubit-0 bit is 0, else -1.
```

```
    exp_val = 0.0
    dim = 2 ** n_qubits
    for idx in range(dim):
        amp = final_state[idx]
        prob = (amp.real**2 + amp.imag**2)
        # bit of qubit0 is (idx & 1)
        bit0 = (idx & 1)
        z_val = 1.0 if bit0 == 0 else -1.0
        exp_val += z_val * prob

    return torch.tensor([exp_val], dtype=torch.float32)
```

Custom Autograd Class for the Circuits:

```
class CircuitFunction(torch.autograd.Function):
    """
    A class that does forward pass by simulating the circuit,
    and backward pass by finite-differences on each parameter.
    """

    @staticmethod
    def forward(ctx, params):
        # (we do require_grad in the code that calls us, but here we do normal forward)
        params_ = params.detach().cpu().numpy() #detach and convert for cirq
        value = run_circuit(params_)
        ctx.save_for_backward(params)  # store for backward
        return value  # shape [1]

    @staticmethod
    def backward(ctx, grad_output):
        """
        Finite-difference approximation:
        derivative wrt param_i ~ (f(params + e_i*eps) - f(params - e_i*eps)) / (2*eps)
        """
        (params,) = ctx.saved_tensors
        params_np = params.detach().cpu().numpy()

        grad_params = torch.zeros_like(params)
        for i in range(len(params_np)):
            # + eps
            params_plus = params_np.copy()
            params_plus[i] += eps
            f_plus = run_circuit(params_plus)

            # - eps
            params_minus = params_np.copy()
            params_minus[i] -= eps
            f_minus = run_circuit(params_minus)

            # partial derivative
            dfdtheta_i = (f_plus - f_minus) / (2.0 * eps)
            grad_params[i] = dfdtheta_i

        # Multiply by incoming grad_output (chain rule)
        grad_params = grad_output * grad_params
        return grad_params


def quantum_forward(params):
    """
    Helper function that calls our custom autograd function.
    """
    return CircuitFunction.apply(params)
```

Creating MLP:

```
class MLP(nn.Module):
    def __init__(self, input_dim, hidden_dim, output_dim):
        super().__init__()
        self.net = nn.Sequential(
            nn.Linear(input_dim, hidden_dim),
            nn.ReLU(),
            nn.Linear(hidden_dim, hidden_dim),
            nn.ReLU(),
            nn.Linear(hidden_dim, output_dim)
        )
    def forward(self, x):
        return self.net(x)
```

Data Generation and Training Setup:

```
X = torch.randn(n_samples, input_dim) # Sample random data from normal distribution
y = torch.randn(n_samples, 1) # we want circuit output ~ some random values

model = MLP(input_dim, hidden_dim, output_dim)
optimizer = optim.Adam(model.parameters(), lr=learning_rate)
loss_fn = nn.MSELoss()
```

Training:

```
for epoch in range(n_epochs):
    total_loss = 0.0
    for i in range(n_samples):
        xi = X[i].unsqueeze(0)   # shape [1, input_dim]
        yi = y[i]               # shape [1]

        # 1) Forward MLP to get PQC parameters
        pqc_params = model(xi)  # shape [1, n_params]
        pqc_params = pqc_params.view(-1)  # flatten to [n_params]

        # 2) Evaluate quantum circuit
        out = quantum_forward(pqc_params) # shape [1]

        # 3) Compute MSE
        loss = loss_fn(out, yi)

        # 4) Backprop
        optimizer.zero_grad()
        loss.backward()
        optimizer.step()

        total_loss += loss.item()

    avg_loss = total_loss / n_samples
    print(f"Epoch [{epoch+1}/{n_epochs}] - Loss: {avg_loss:.6f}")

print("Training complete!")
```

```
Epoch [1/20] - Loss: 0.977558
Epoch [2/20] - Loss: 0.894064
Epoch [3/20] - Loss: 0.863842
Epoch [4/20] - Loss: 0.874149
Epoch [5/20] - Loss: 0.832021
Epoch [6/20] - Loss: 0.870231
Epoch [7/20] - Loss: 0.869434
Epoch [8/20] - Loss: 0.886635
Epoch [9/20] - Loss: 0.846890
Epoch [10/20] - Loss: 0.863747
Epoch [11/20] - Loss: 0.857026
Epoch [12/20] - Loss: 0.836613
Epoch [13/20] - Loss: 0.824598
Epoch [14/20] - Loss: 0.809233
Epoch [15/20] - Loss: 0.798381
Epoch [16/20] - Loss: 0.828946
Epoch [17/20] - Loss: 0.812880
Epoch [18/20] - Loss: 0.807946
Epoch [19/20] - Loss: 0.783687
Epoch [20/20] - Loss: 0.855771
Training complete!
```