Class 14: RNASeq Mini- Project

Patrick Nguyen (PID: A17680785)

Table of contents

Background . . . 1
Data Import . . . 1
  Clean up (data tidying) . . . 2
  Remove zero count genes . . . 3
DESeq Analysis . . . 3
  Setting up the DESeq object . . . 3
  Running DESeq . . . 3
  Getting results . . . 4
Volcano plot . . . 5
Add Annotation . . . 6
Pathway Analysis . . . 8
  KEGG . . . 9
  GO . . . 16
  Reactome . . . 18

Background

The data for today's mini-project comes from a knock-down study of an important HOX gene.

Data Import

```
countData <- read.csv("GSE37704_featurecounts.csv", row.names=1)
colData <- read.csv("GSE37704_metadata.csv", row.names=1)
```

```r
head(countData)
```

```
                 length SRR493366 SRR493367 SRR493368 SRR493369 SRR493370
ENSG00000186092    918         0         0         0         0         0
ENSG00000279928    718         0         0         0         0         0
ENSG00000279457   1982        23        28        29        29        28
ENSG00000278566    939         0         0         0         0         0
ENSG00000273547    939         0         0         0         0         0
ENSG00000187634   3214       124       123       205       207       212
                 SRR493371
ENSG00000186092         0
ENSG00000279928         0
ENSG00000279457        46
ENSG00000278566         0
ENSG00000273547         0
ENSG00000187634       258
```

```r
head(colData)
```

```
              condition
SRR493366 control_sirna
SRR493367 control_sirna
SRR493368 control_sirna
SRR493369      hoxa1_kd
SRR493370      hoxa1_kd
SRR493371      hoxa1_kd
```

Clean up (data tidying)

We need to remove the length column from our `countData` to make the columns match the rows in `colData`.

```r
countData <- countData[,-1]
```

Check match of `colData` and `countData`

```r
rownames(colData) == colnames(countData)
```

```
[1] TRUE TRUE TRUE TRUE TRUE TRUE
```

```r
head(countData)
```

```
                 SRR493366 SRR493367 SRR493368 SRR493369 SRR493370 SRR493371
ENSG00000186092         0         0         0         0         0         0
ENSG00000279928         0         0         0         0         0         0
ENSG00000279457        23        28        29        29        28        46
ENSG00000278566         0         0         0         0         0         0
ENSG00000273547         0         0         0         0         0         0
ENSG00000187634       124       123       205       207       212       258
```

Remove zero count genes

```r
to.keep <- rowSums(countData) > 0
countData <- countData[to.keep,]
```

DESeq Analysis

```r
library(DESeq2)
```

Setting up the DESeq object

```r
dds <- DESeqDataSetFromMatrix(countData = countData,
                              colData = colData,
                              design = ~condition)
```

```
Warning in DESeqDataSet(se, design = design, ignoreRank): some variables in
design formula are characters, converting to factors
```

Running DESeq

```r
dds <- DESeq(dds)
```

```
estimating size factors
```

```
estimating dispersions

gene-wise dispersion estimates

mean-dispersion relationship

final dispersion estimates

fitting model and testing
```

```r
dds
```

```
class: DESeqDataSet
dim: 15975 6
metadata(1): version
assays(4): counts mu H cooks
rownames(15975): ENSG00000279457 ENSG00000187634 ... ENSG00000276345
  ENSG00000271254
rowData names(22): baseMean baseVar ... deviance maxCooks
colnames(6): SRR493366 SRR493367 ... SRR493370 SRR493371
colData names(2): condition sizeFactor
```

Getting results

```r
res = results(dds)
head(res)
```

```
log2 fold change (MLE): condition hoxa1 kd vs control sirna
Wald test p-value: condition hoxa1 kd vs control sirna
DataFrame with 6 rows and 6 columns
                 baseMean log2FoldChange     lfcSE       stat      pvalue
                <numeric>      <numeric> <numeric>  <numeric>   <numeric>
ENSG00000279457   29.9136      0.1792571 0.3248216   0.551863 5.81042e-01
ENSG00000187634  183.2296      0.4264571 0.1402658   3.040350 2.36304e-03
ENSG00000188976 1651.1881     -0.6927205 0.0548465 -12.630158 1.43990e-36
ENSG00000187961  209.6379      0.7297556 0.1318599   5.534326 3.12428e-08
ENSG00000187583   47.2551      0.0405765 0.2718928   0.149237 8.81366e-01
ENSG00000187642   11.9798      0.5428105 0.5215598   1.040744 2.97994e-01
```

```
                     padj
                  <numeric>
ENSG00000279457 6.86555e-01
ENSG00000187634 5.15718e-03
ENSG00000188976 1.76549e-35
ENSG00000187961 1.13413e-07
ENSG00000187583 9.19031e-01
ENSG00000187642 4.03379e-01
```

Volcano plot

A plot of log2 fold change vs -log of Adjusted P-value

```
library(ggplot2)
```

```
ggplot(res) +
  aes(log2FoldChange, -log(padj)) +
  geom_point()
```

```
Warning: Removed 1237 rows containing missing values or values outside the scale range
(`geom_point()`).
```

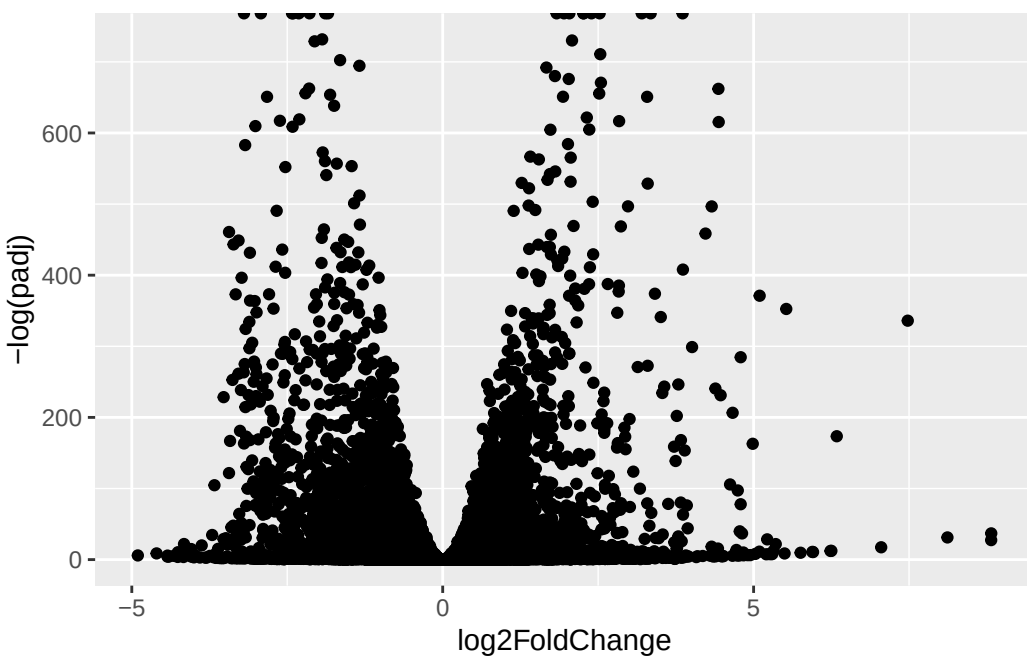

```r
mycols <- rep("gray", nrow(res))
mycols[res$log2FoldChange > 2] <- "blue"
mycols[res$log2FoldChange < -2] <- "blue"
mycols[ res$padj >= 0.05 ] <- "gray"
```

```r
ggplot(res) +
  aes(x= log2FoldChange, y= -log(padj)) +
  geom_point(col = mycols) +
  xlab("Log2(FoldChange)") +
  ylab("-Log(P-value)") +
  geom_vline(xintercept = c(-2,+2), col="red") +
  geom_hline(yintercept = -log(0.05), col="red")
```

```
Warning: Removed 1237 rows containing missing values or values outside the scale range
(`geom_point()`).
```

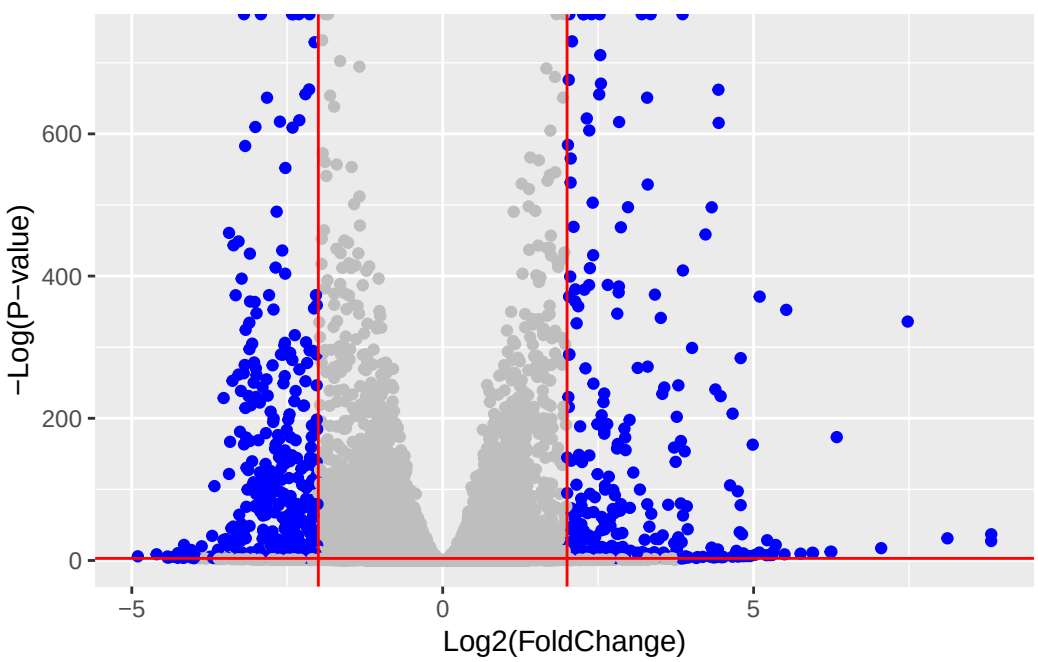

Add Annotation

```r
library("AnnotationDbi")
library("org.Hs.eg.db")
```

```r
columns(org.Hs.eg.db)
```

```
 [1] "ACCNUM"       "ALIAS"        "ENSEMBL"      "ENSEMBLPROT"  "ENSEMBLTRANS"
 [6] "ENTREZID"     "ENZYME"       "EVIDENCE"     "EVIDENCEALL"  "GENENAME"
[11] "GENETYPE"     "GO"           "GOALL"        "IPI"          "MAP"
[16] "OMIM"         "ONTOLOGY"     "ONTOLOGYALL"  "PATH"         "PFAM"
[21] "PMID"         "PROSITE"      "REFSEQ"       "SYMBOL"       "UCSCKG"
[26] "UNIPROT"
```

```r
res$symbol = mapIds(org.Hs.eg.db,
                    keys=row.names(res),
                    keytype="ENSEMBL",
                    column="SYMBOL",
                    multiVals="first")
```

```
'select()' returned 1:many mapping between keys and columns
```

```r
res$entrez = mapIds(org.Hs.eg.db,
                    keys=row.names(res),
                    keytype="ENSEMBL",
                    column="ENTREZID",
                    multiVals="first")
```

```
'select()' returned 1:many mapping between keys and columns
```

```r
res$name =   mapIds(org.Hs.eg.db,
                    keys=row.names(res),
                    keytype="ENSEMBL",
                    column="GENENAME",
                    multiVals="first")
```

```
'select()' returned 1:many mapping between keys and columns
```

```r
head(res, 10)
```

```
log2 fold change (MLE): condition hoxa1 kd vs control sirna
Wald test p-value: condition hoxa1 kd vs control sirna
DataFrame with 10 rows and 9 columns
                   baseMean log2FoldChange     lfcSE       stat      pvalue
                  <numeric>      <numeric> <numeric>  <numeric>   <numeric>
ENSG00000279457   29.913579      0.1792571 0.3248216   0.551863 5.81042e-01
ENSG00000187634  183.229650      0.4264571 0.1402658   3.040350 2.36304e-03
ENSG00000188976 1651.188076     -0.6927205 0.0548465 -12.630158 1.43990e-36
ENSG00000187961  209.637938      0.7297556 0.1318599   5.534326 3.12428e-08
ENSG00000187583   47.255123      0.0405765 0.2718928   0.149237 8.81366e-01
ENSG00000187642   11.979750      0.5428105 0.5215598   1.040744 2.97994e-01
ENSG00000188290  108.922128      2.0570638 0.1969053  10.446970 1.51282e-25
ENSG00000187608  350.716868      0.2573837 0.1027266   2.505522 1.22271e-02
ENSG00000188157 9128.439422      0.3899088 0.0467163   8.346304 7.04321e-17
ENSG00000237330    0.158192      0.7859552 4.0804729   0.192614 8.47261e-01
                      padj      symbol      entrez                   name
                  <numeric> <character> <character>            <character>
ENSG00000279457 6.86555e-01          NA          NA                     NA
ENSG00000187634 5.15718e-03      SAMD11      148398 sterile alpha motif ..
ENSG00000188976 1.76549e-35       NOC2L       26155 NOC2 like nucleolar ..
ENSG00000187961 1.13413e-07      KLHL17      339451 kelch like family me..
ENSG00000187583 9.19031e-01     PLEKHN1       84069 pleckstrin homology ..
ENSG00000187642 4.03379e-01       PERM1       84808 PPARGC1 and ESRR ind..
ENSG00000188290 1.30538e-24        HES4       57801 hes family bHLH tran..
ENSG00000187608 2.37452e-02       ISG15        9636 ISG15 ubiquitin like..
ENSG00000188157 4.21963e-16        AGRN      375790                  agrin
ENSG00000237330          NA      RNF223      401934 ring finger protein ..
```

```r
res = res[order(res$pvalue),]
write.csv(res, file="deseq_results.csv")
```

Pathway Analysis

```r
library(pathview)
```

```
##############################################################################
Pathview is an open source software package distributed under GNU General
```

```
Public License version 3 (GPLv3). Details of GPLv3 is available at
http://www.gnu.org/licenses/gpl-3.0.html. Particullary, users are required to
formally cite the original Pathview paper (not just mention it) in publications
or products. For details, do citation("pathview") within R.

The pathview downloads and uses KEGG data. Non-academic uses may require a KEGG
license agreement (details at http://www.kegg.jp/kegg/legal.html).
##############################################################################
```

```r
library(gage)
```

```r
library(gageData)
```

```r
data(kegg.sets.hs)
data(sigmet.idx.hs)
```

KEGG

```r
# Focus on signaling and metabolic pathways only
kegg.sets.hs = kegg.sets.hs[sigmet.idx.hs]

# Examine the first 3 pathways
head(kegg.sets.hs, 3)
```

```
$`hsa00232 Caffeine metabolism`
[1] "10"   "1544" "1548" "1549" "1553" "7498" "9"

$`hsa00983 Drug metabolism - other enzymes`
 [1] "10"     "1066"   "10720"  "10941"  "151531" "1548"   "1549"   "1551"
 [9] "1553"   "1576"   "1577"   "1806"   "1807"   "1890"   "221223" "2990"
[17] "3251"   "3614"   "3615"   "3704"   "51733"  "54490"  "54575"  "54576"
[25] "54577"  "54578"  "54579"  "54600"  "54657"  "54658"  "54659"  "54963"
[33] "574537" "64816"  "7083"   "7084"   "7172"   "7363"   "7364"   "7365"
[41] "7366"   "7367"   "7371"   "7372"   "7378"   "7498"   "79799"  "83549"
[49] "8824"   "8833"   "9"      "978"

$`hsa00230 Purine metabolism`
```

```
  [1] "100"    "10201"  "10606"  "10621"  "10622"  "10623"  "107"    "10714"
  [9] "108"    "10846"  "109"    "111"    "11128"  "11164"  "112"    "113"
 [17] "114"    "115"    "122481" "122622" "124583" "132"    "158"    "159"
 [25] "1633"   "171568" "1716"   "196883" "203"    "204"    "205"    "221823"
 [33] "2272"   "22978"  "23649"  "246721" "25885"  "2618"   "26289"  "270"
 [41] "271"    "27115"  "272"    "2766"   "2977"   "2982"   "2983"   "2984"
 [49] "2986"   "2987"   "29922"  "3000"   "30833"  "30834"  "318"    "3251"
 [57] "353"    "3614"   "3615"   "3704"   "377841" "471"    "4830"   "4831"
 [65] "4832"   "4833"   "4860"   "4881"   "4882"   "4907"   "50484"  "50940"
 [73] "51082"  "51251"  "51292"  "5136"   "5137"   "5138"   "5139"   "5140"
 [81] "5141"   "5142"   "5143"   "5144"   "5145"   "5146"   "5147"   "5148"
 [89] "5149"   "5150"   "5151"   "5152"   "5153"   "5158"   "5167"   "5169"
 [97] "51728"  "5198"   "5236"   "5313"   "5315"   "53343"  "54107"  "5422"
[105] "5424"   "5425"   "5426"   "5427"   "5430"   "5431"   "5432"   "5433"
[113] "5434"   "5435"   "5436"   "5437"   "5438"   "5439"   "5440"   "5441"
[121] "5471"   "548644" "55276"  "5557"   "5558"   "55703"  "55811"  "55821"
[129] "5631"   "5634"   "56655"  "56953"  "56985"  "57804"  "58497"  "6240"
[137] "6241"   "64425"  "646625" "654364" "661"    "7498"   "8382"   "84172"
[145] "84265"  "84284"  "84618"  "8622"   "8654"   "87178"  "8833"   "9060"
[153] "9061"   "93034"  "953"    "9533"   "954"    "955"    "956"    "957"
[161] "9583"   "9615"
```

```
foldchanges = res$log2FoldChange
names(foldchanges) = res$entrez
head(foldchanges)
```

```
     1266     54855      1465      2034      2150      6659
-2.422719  3.201955 -2.313738 -1.888019  3.344508  2.392288
```

```
keggres = gage(foldchanges, gsets=kegg.sets.hs)
```

```
attributes(keggres)
```

```
$names
[1] "greater" "less"    "stats"
```

```
head(keggres$less)
```

```
                                      p.geomean stat.mean        p.val
hsa04110 Cell cycle                  8.995727e-06 -4.378644 8.995727e-06
```

```
hsa03030 DNA replication              9.424076e-05 -3.951803 9.424076e-05
hsa03013 RNA transport                1.375901e-03 -3.028500 1.375901e-03
hsa03440 Homologous recombination     3.066756e-03 -2.852899 3.066756e-03
hsa04114 Oocyte meiosis               3.784520e-03 -2.698128 3.784520e-03
hsa00010 Glycolysis / Gluconeogenesis 8.961413e-03 -2.405398 8.961413e-03
                                            q.val set.size         exp1
hsa04110 Cell cycle                   0.001448312      121 8.995727e-06
hsa03030 DNA replication              0.007586381       36 9.424076e-05
hsa03013 RNA transport                0.073840037      144 1.375901e-03
hsa03440 Homologous recombination     0.121861535       28 3.066756e-03
hsa04114 Oocyte meiosis               0.121861535      102 3.784520e-03
hsa00010 Glycolysis / Gluconeogenesis 0.212222694       53 8.961413e-03
```

```
pathview(gene.data=foldchanges, pathway.id="hsa04110")
```

```
'select()' returned 1:1 mapping between keys and columns

Info: Working in directory C:/Users/patri/OneDrive/Desktop/Bimm143/class14

Info: Writing image file hsa04110.pathview.png
```

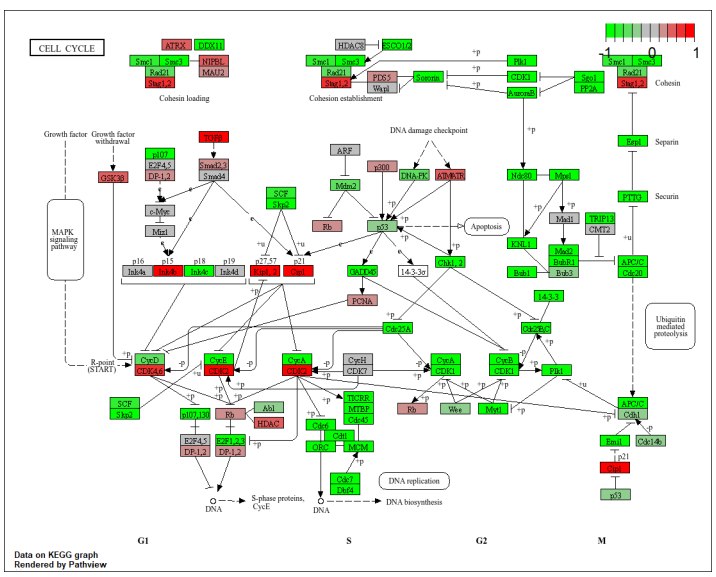


```
pathview(gene.data=foldchanges, pathway.id="hsa04110", kegg.native=FALSE)
```

```
'select()' returned 1:1 mapping between keys and columns
```

```
Warning: reconcile groups sharing member nodes!

     [,1] [,2]
[1,] "9"  "300"
[2,] "9"  "306"

Info: Working in directory C:/Users/patri/OneDrive/Desktop/Bimm143/class14

Info: Writing image file hsa04110.pathview.pdf
```

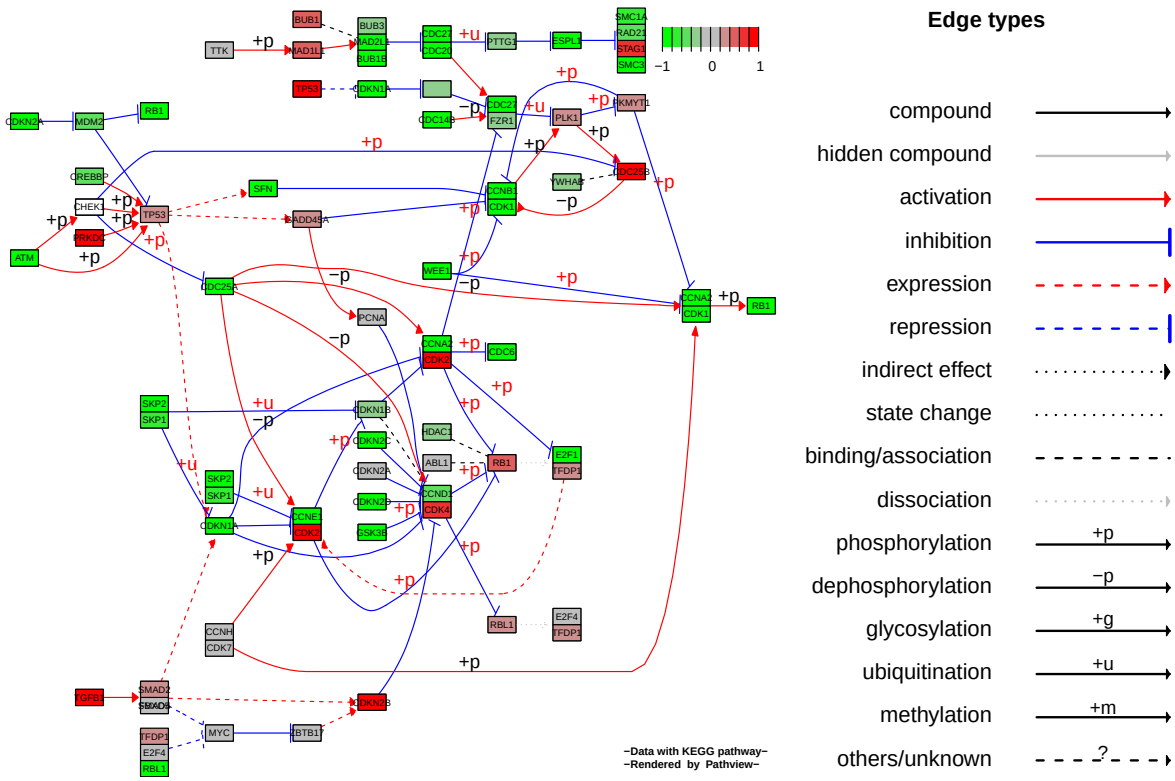


```r
## Focus on top 5 upregulated pathways here for demo purposes only
keggrespathways <- rownames(keggres$greater)[1:5]

# Extract the 8 character long IDs part of each string
keggresids = substr(keggrespathways, start=1, stop=8)
keggresids
```

```
[1] "hsa04640" "hsa04630" "hsa00140" "hsa04142" "hsa04330"
```

```r
pathview(gene.data=foldchanges, pathway.id=keggresids, species="hsa")
```

```
'select()' returned 1:1 mapping between keys and columns

Info: Working in directory C:/Users/patri/OneDrive/Desktop/Bimm143/class14

Info: Writing image file hsa04640.pathview.png

'select()' returned 1:1 mapping between keys and columns

Info: Working in directory C:/Users/patri/OneDrive/Desktop/Bimm143/class14

Info: Writing image file hsa04630.pathview.png

'select()' returned 1:1 mapping between keys and columns

Info: Working in directory C:/Users/patri/OneDrive/Desktop/Bimm143/class14

Info: Writing image file hsa00140.pathview.png

'select()' returned 1:1 mapping between keys and columns

Info: Working in directory C:/Users/patri/OneDrive/Desktop/Bimm143/class14

Info: Writing image file hsa04142.pathview.png

'select()' returned 1:1 mapping between keys and columns

Info: Working in directory C:/Users/patri/OneDrive/Desktop/Bimm143/class14

Info: Writing image file hsa04330.pathview.png
```

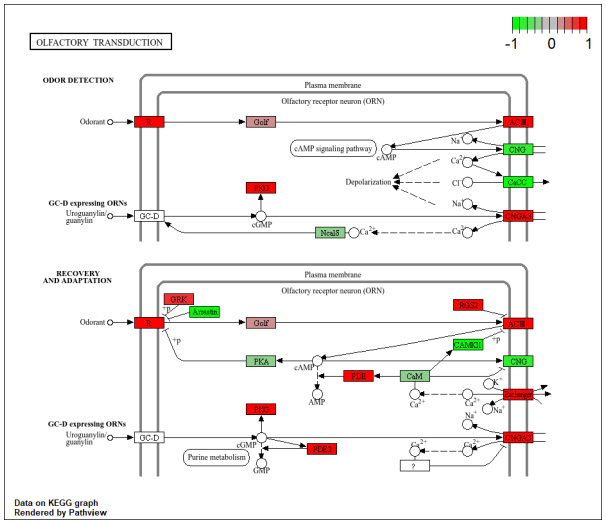
OLFAMOTORY TRANSDUCTION
-1 0 1
ODOR DETECTION
Plasma membrane
Olfactory receptor neuron (ORN)
Odorant
OR
Golf
ACIII
cAMP signaling pathway
cAMP
CNG
Depolarization
CaCC
PKA
GC-D expressing ORNs
Uroguanylin guanylin
GC-D
cGMP
Nccl8
RECOVERY AND ADAPTATION
GRK2
Arrestin
ROS2
CAMKII
PDE
CaM
PDE2
Purine metabolism
Data on KEGG graph
Rendered by Pathview

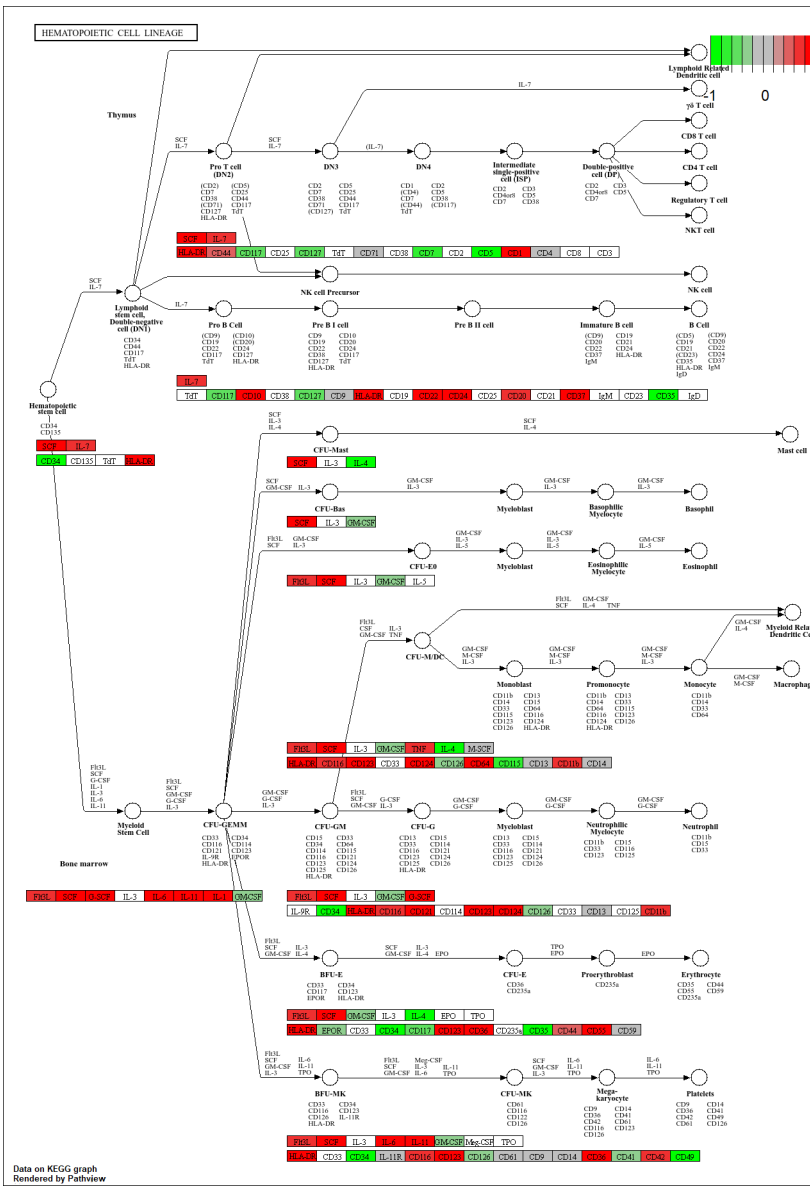
HEMATOPOIETIC CELL LINEAGE
Lymphoid Related Dendritic cell
γδ T cell
CD8 T cell
CD4 T cell
Regulatory T cell
NKT cell
Thymus
Pro T cell (DN2)
DN3
DN4
Intermediate single-positive cell (ISP)
Double-positive cell (DP)
NK cell Precursor
NK cell
Lymphoid stem cell, Double-negative cell (DN1)
Pro B Cell
Pre B I cell
Pre B II cell
Immature B cell
B Cell
Hematopoietic stem cell
CFU-Mast
Mast cell
CFU-Bas
Myeloblast
Basophilic Myelocyte
Basophil
CFU-E0
Eosinophilic Myelocyte
Eosinophil
CFU-M/DC
Monoblast
Promonocyte
Monocyte
Macrophag
Myeloid Stem Cell
CFU-GEMM
CFU-GM
CFU-G
Neutrophilic Myelocyte
Neutrophil
Bone marrow
BFU-E
CFU-E
Proerythroblast
Erythrocyte
BFU-MK
CFU-MK
Mega-karyocyte
Platelets
Data on KEGG graph
Rendered by Pathview

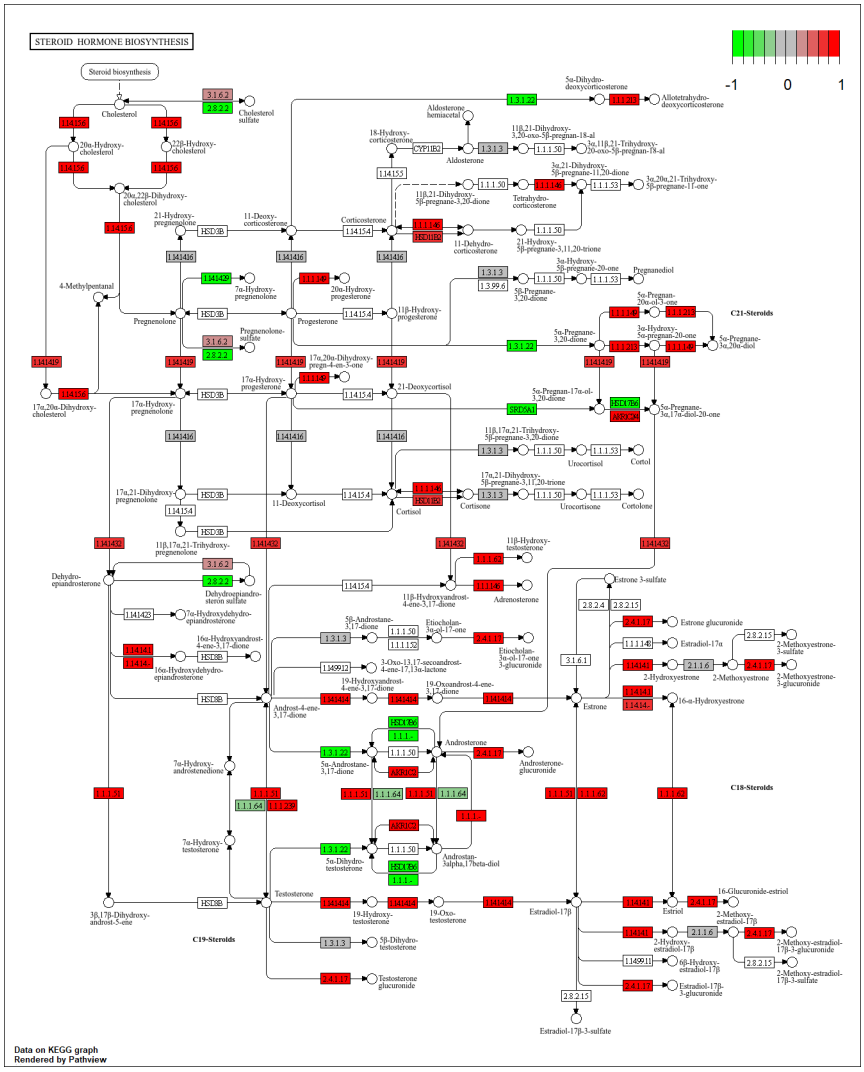
STEROID HORMONE BIOSYNTHESIS
-1
0
1
Steroid biosynthesis
Cholesterol
Cholesterol sulfate
20α-Hydroxy-cholesterol
22β-Hydroxy-cholesterol
20α,22β-Dihydroxy-cholesterol
21-Hydroxy-pregnenolone
11-Deoxy-corticosterone
Corticosterone
11-Dehydro-corticosterone
21-Hydroxy-5β-pregnane-3,11,20-trione
3α-Hydroxy-5β-pregnane-20-one
Pregnanediol
5β-Pregnane-3,20-dione
5α-Pregnan-20α-ol-3-one
C21-Steroids
5α-Pregnane-3α,20α-diol
5α-Pregnane-3α,17α-diol-20-one
5α-Pregnane-3α,20-dione
3α-Hydroxy-5α-pregnan-20-one
5α-Pregnane-3,20-dione
5α-Pregnan-17α-ol-3,20-dione
4-Methylpentanal
Pregnenolone
Pregnenolone-sulfate
7α-Hydroxy-pregnenolone
20α-Hydroxy-progesterone
Progesterone
11β-Hydroxy-progesterone
17α,20α-Dihydroxy-pregn-4-en-3-one
17α-Hydroxy-progesterone
21-Deoxycortisol
17α,20α-Dihydroxy-cholesterol
17α-Hydroxy-pregnenolone
11β,17α,21-Trihydroxy-5β-pregnane-3,20-dione
Urocortisol
Cortol
17α,21-Dihydroxy-5β-pregnane-3,11,20-trione
17α,21-Dihydroxy-pregnenolone
11-Deoxycortisol
Cortisone
Cortisol
Urocortisone
Cortolone
11β,17α,21-Trihydroxy-pregnenolone
11β-Hydroxy-testosterone
Dehydro-epiandrosterone
Dehydroepiandro-sterón sulfate
11β-Hydroxyandrost-4-ene-3,17-dione
Adrenosterone
Estrone 3-sulfate
7α-Hydroxydehydro-epiandrosterone
5β-Androstane-3,17-dione
Etiocholan-3α-ol-17-one
Estrone glucuronide
Estradiol-17α
2-Methoxyestrone-3-sulfate
16α-Hydroxyandrost-4-ene-3,17-dione
16α-Hydroxydehydro-epiandrosterone
3-Oxo-13,17-secoandrost-4-ene-17,13α-lactone
Etiocholan-3α-ol-17-one 3-glucuronide
2-Hydroxyestrone
2-Methoxyestrone
2-Methoxyestrone-3-glucuronide
19-Hydroxyandrost-4-ene-3,17-dione
19-Oxoandrost-4-ene-3,17-dione
Androst-4-ene-3,17-dione
Estrone
16-α-Hydroxyestrone
Androsterone
Androsterone-glucuronide
7α-Hydroxy-androstenedione
3α-Androstane-3,17-dione
C18-Steroids
7α-Hydroxy-testosterone
5α-Dihydro-testosterone
Androstan-3alpha,17beta-diol
Testosterone
3β,17β-Dihydroxy-androst-5-ene
19-Hydroxy-testosterone
19-Oxo-testosterone
Estradiol-17β
Estriol
16-Glucuronide-estriol
2-Methoxy-estradiol-17β
2-Hydroxy-estradiol-17β
2-Methoxy-estradiol-17β-3-glucuronide
6β-Hydroxy-estradiol-17β
2-Methoxy-estradiol-17β-3-sulfate
C19-Steroids
5β-Dihydro-testosterone
Testosterone glucuronide
Estradiol-17β-3-glucuronide
Estradiol-17β-3-sulfate
Data on KEGG graph
Rendered by Pathview

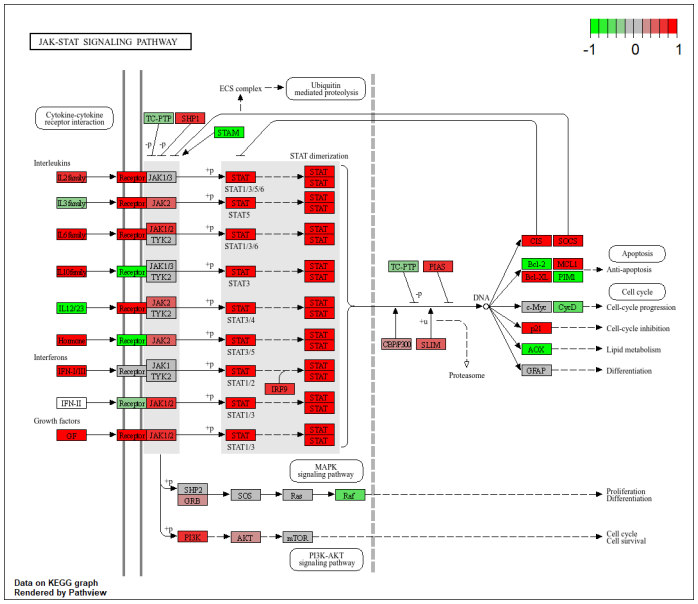

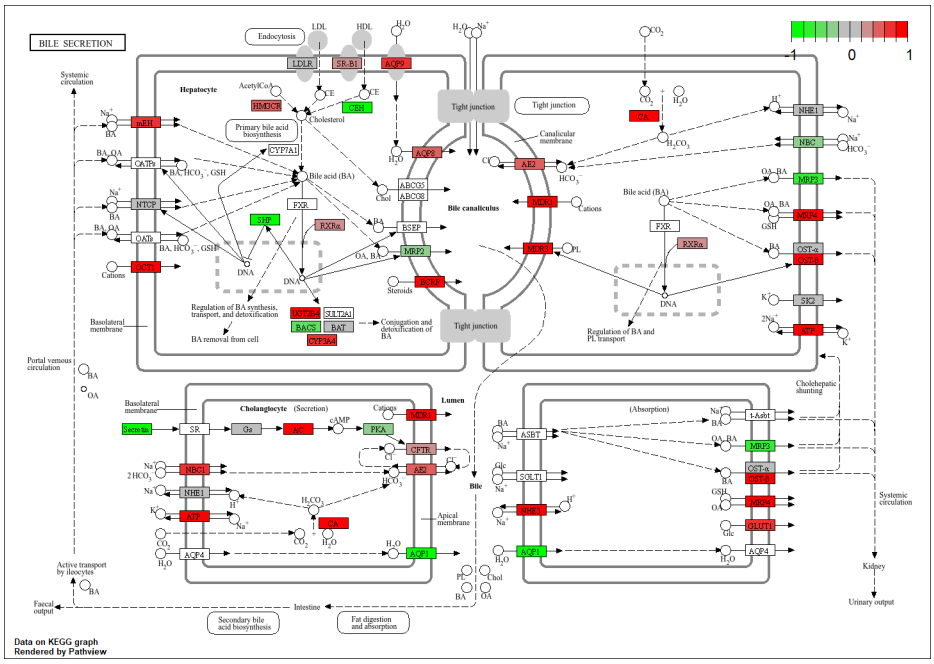

GO

```
data(go.sets.hs)
data(go.subs.hs)
```

```r
# Focus on Biological Process subset of GO
gobpsets = go.sets.hs[go.subs.hs$BP]

gobpres = gage(foldchanges, gsets=gobpsets)

lapply(gobpres, head)
```

```
$greater
                                          p.geomean stat.mean        p.val
GO:0007156 homophilic cell adhesion       8.519724e-05  3.824205 8.519724e-05
GO:0002009 morphogenesis of an epithelium 1.396681e-04  3.653886 1.396681e-04
GO:0048729 tissue morphogenesis           1.432451e-04  3.643242 1.432451e-04
GO:0007610 behavior                       1.925222e-04  3.565432 1.925222e-04
GO:0060562 epithelial tube morphogenesis  5.932837e-04  3.261376 5.932837e-04
GO:0035295 tube development               5.953254e-04  3.253665 5.953254e-04
                                              q.val set.size         exp1
GO:0007156 homophilic cell adhesion       0.1951953      113 8.519724e-05
GO:0002009 morphogenesis of an epithelium 0.1951953      339 1.396681e-04
GO:0048729 tissue morphogenesis           0.1951953      424 1.432451e-04
GO:0007610 behavior                       0.1967577      426 1.925222e-04
GO:0060562 epithelial tube morphogenesis  0.3565320      257 5.932837e-04
GO:0035295 tube development               0.3565320      391 5.953254e-04

$less
                                            p.geomean stat.mean        p.val
GO:0048285 organelle fission             1.536227e-15 -8.063910 1.536227e-15
GO:0000280 nuclear division              4.286961e-15 -7.939217 4.286961e-15
GO:0007067 mitosis                       4.286961e-15 -7.939217 4.286961e-15
GO:0000087 M phase of mitotic cell cycle 1.169934e-14 -7.797496 1.169934e-14
GO:0007059 chromosome segregation        2.028624e-11 -6.878340 2.028624e-11
GO:0000236 mitotic prometaphase          1.729553e-10 -6.695966 1.729553e-10
                                               q.val set.size         exp1
GO:0048285 organelle fission             5.841698e-12      376 1.536227e-15
GO:0000280 nuclear division              5.841698e-12      352 4.286961e-15
GO:0007067 mitosis                       5.841698e-12      352 4.286961e-15
GO:0000087 M phase of mitotic cell cycle 1.195672e-11      362 1.169934e-14
GO:0007059 chromosome segregation        1.658603e-08      142 2.028624e-11
GO:0000236 mitotic prometaphase          1.178402e-07       84 1.729553e-10

$stats
                                          stat.mean     exp1
```

```
GO:0007156 homophilic cell adhesion        3.824205 3.824205
GO:0002009 morphogenesis of an epithelium  3.653886 3.653886
GO:0048729 tissue morphogenesis            3.643242 3.643242
GO:0007610 behavior                        3.565432 3.565432
GO:0060562 epithelial tube morphogenesis   3.261376 3.261376
GO:0035295 tube development                3.253665 3.253665
```

Reactome

```r
sig_genes <- res[res$padj <= 0.05 & !is.na(res$padj), "symbol"]
print(paste("Total number of significant genes:", length(sig_genes)))
```

```
[1] "Total number of significant genes: 8147"
```

```r
write.table(sig_genes, file="significant_genes.txt", row.names=FALSE, col.names=FALSE, quote=
```

> Q: What pathway has the most significant "Entities p-value"? Do the most significant pathways listed match your previous KEGG results? What factors could cause differences between the two methods?

The pathway with the most significant p-value is "cell Cycle, Mitotic". The most significant pathways are similar to the KEGG results in that they both mention the "cell cycle" and "meiosis". Reactome slightly differs in that it specifies the specific process step (ex:DNA replication). The differences from these methods is due to the level of depth that each database goes into regarding their results which can affect both the number of genes displayed in the path way and the retrieved p-values from the results.

.