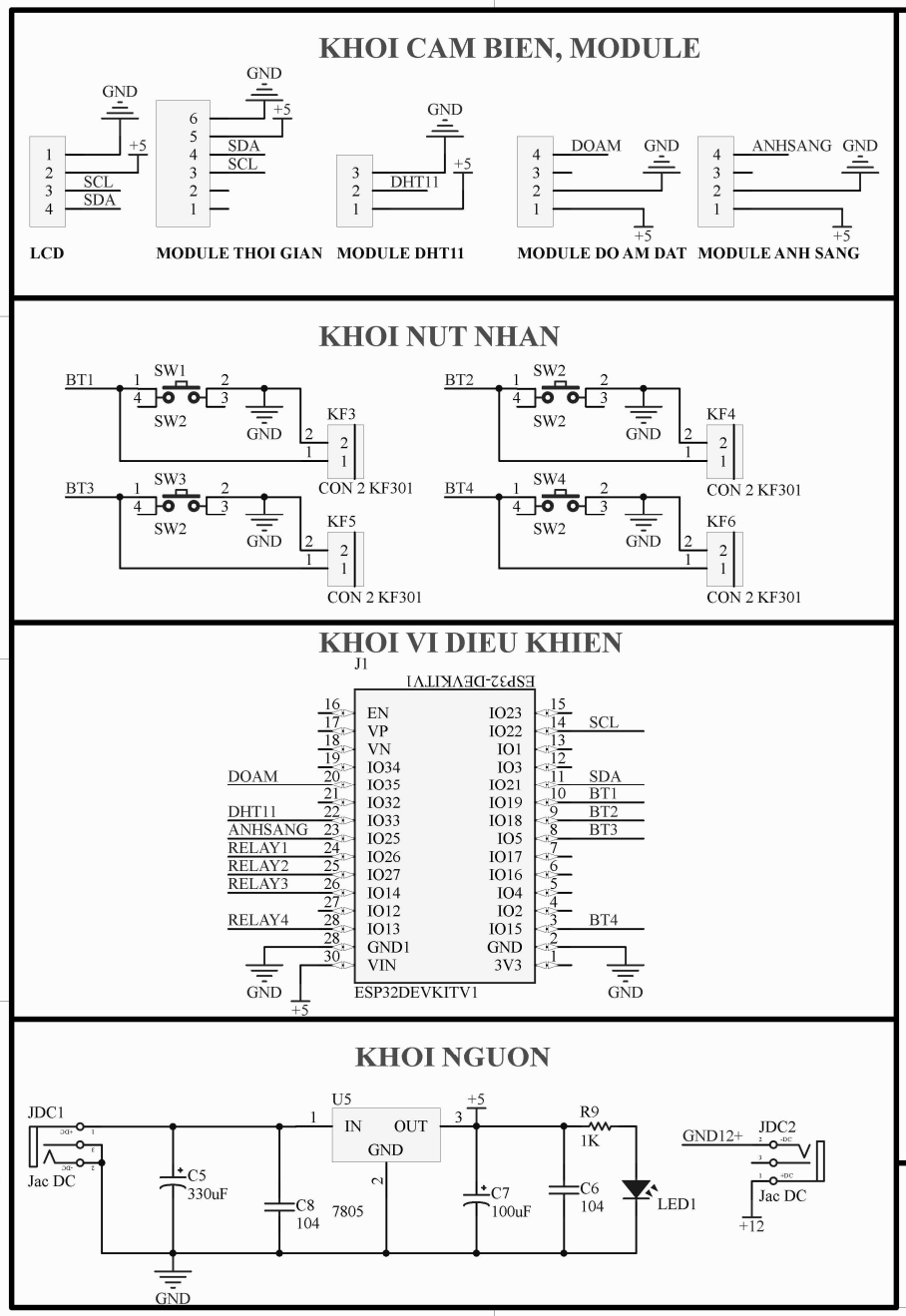


| Title | | |
|---|---|---|
| Size A4 | Number | Revision |
| Date: 5/23/2025 | Sheet of | |
| File: D:\DO AN TOT NGHIEP\...\SMART_GARDEN.SchDoc | Drawn By: | |