Sheet: sheet6D0E6B64

File: tranZPUter-SW_z80.sch

Sheet: sheet6D0E6B65

File: tranZPUter-SW_teensy35.sch

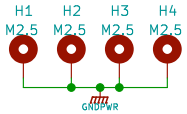

Capabilities upgrade for the Sharp MZ80A.
Providing upgraded hardware and an optional MPU for provision of SD services to host, alternative soft processors, ZPUTA Menu System and additional resources to enhance the Sharp MZ80A.

Sheet: /
File: tranZPUter-SW.sch

Title: tranZPUter SW

Size: A4	Date: 2020-06-10	**Rev: 1.0c**
KiCad E.D.A. kicad (5.1.2-1)-1		Id: 1/3

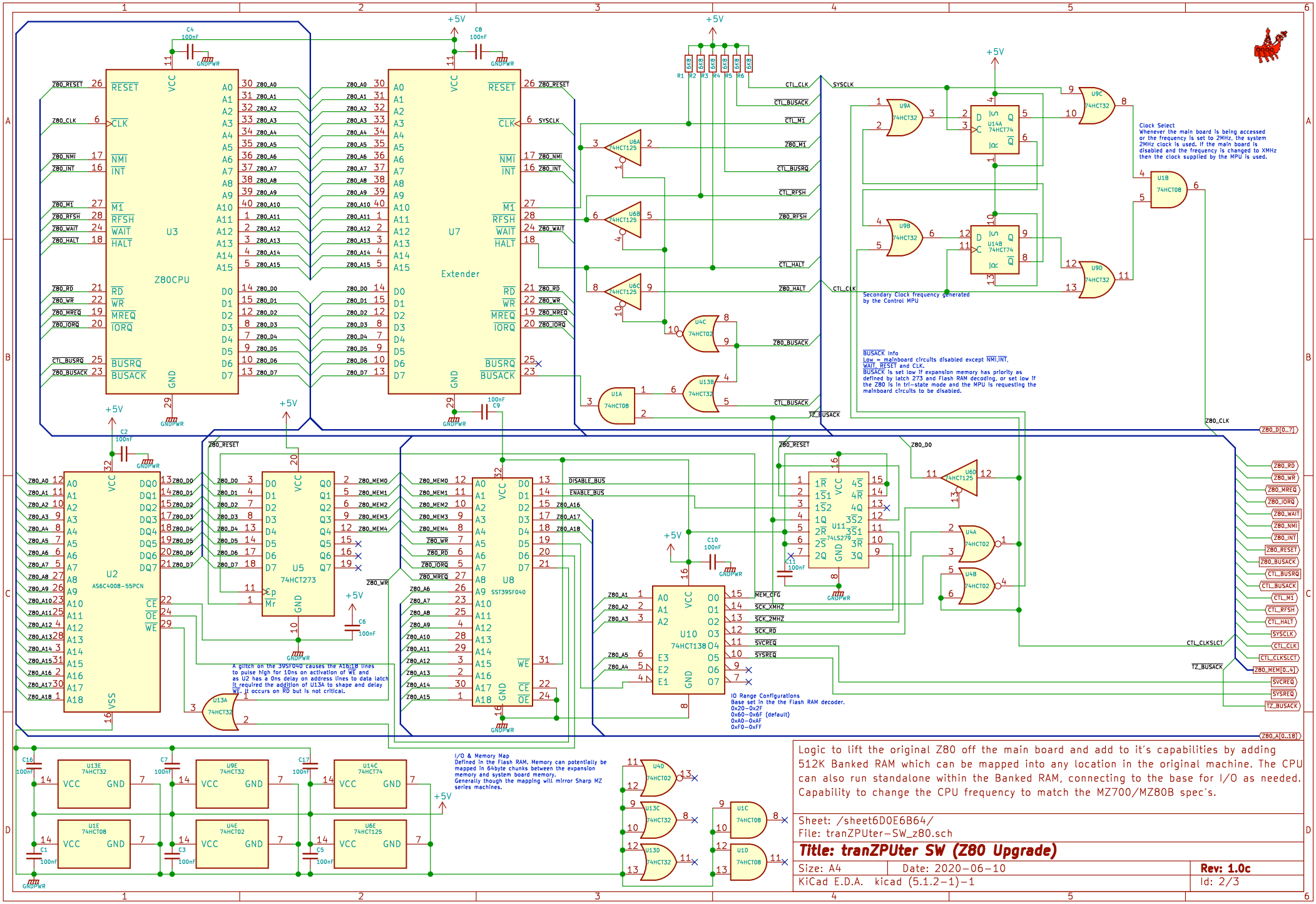

Logic to lift the original Z80 off the main board and add to it's capabilities by adding 512K Banked RAM which can be mapped into any location in the original machine. The CPU can also run standalone within the Banked RAM, connecting to the base for I/O as needed. Capability to change the CPU frequency to match the MZ700/MZ80B spec's.

Sheet: /sheet6D0E6B64/
File: tranZPUter-SW_z80.sch

Title: tranZPUter SW (Z80 Upgrade)

Size: A4	Date: 2020-06-10	Rev: 1.0c
KiCad E.D.A. kicad (5.1.2-1)-1		Id: 2/3

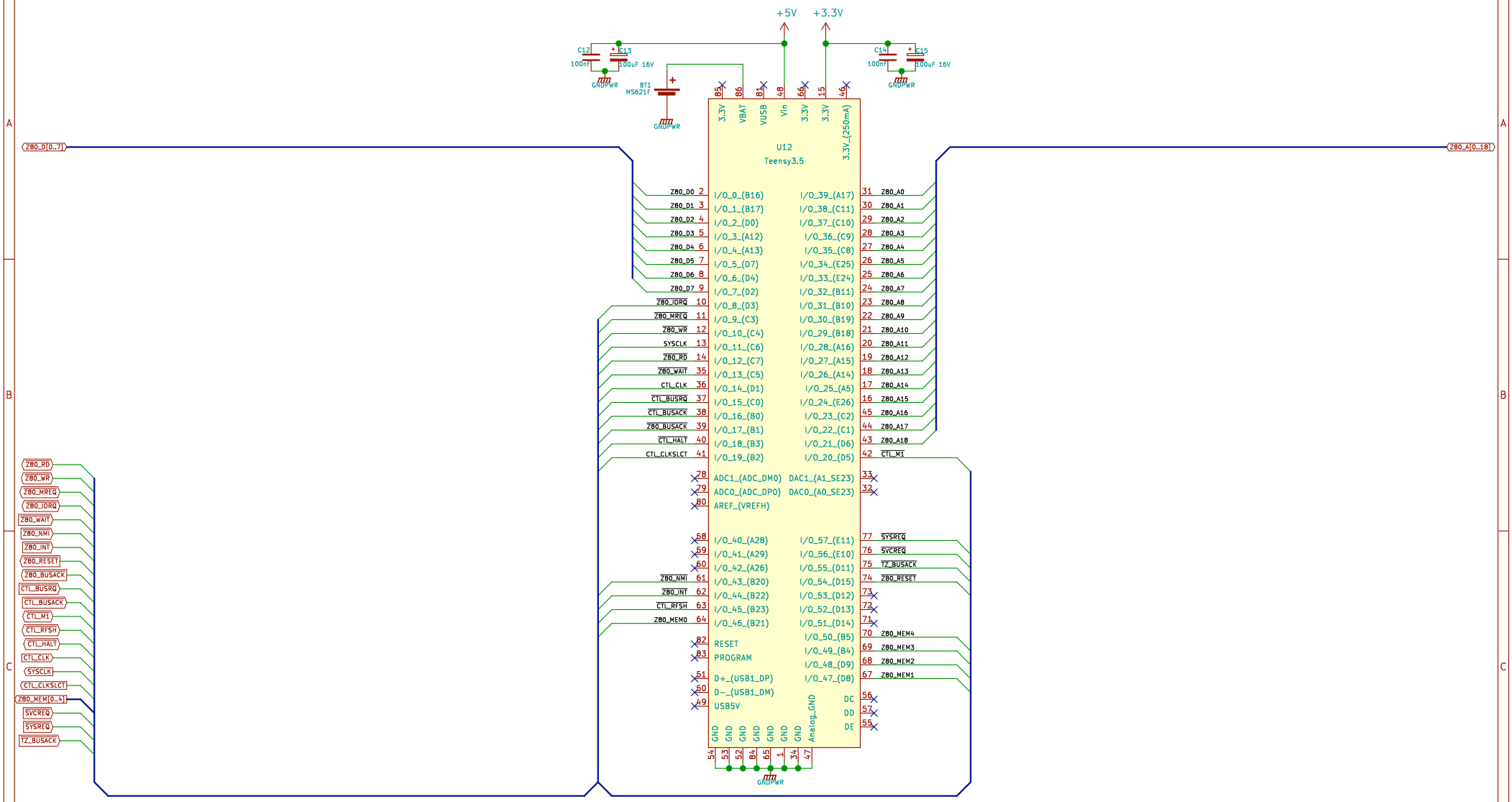

The Teensy 3.5 MPU from PJRC.COM.
A fully self-contained MPU using the Freescale K64F series MPU based on the Cortex-M4 ARM processor. This device is 5V tolerant so no specific voltage conversion is required.

Sheet: /sheet6D0E6B65/
File: tranZPUter-SW_teensy35.sch

Title: tranZPUter SW (MPU)

Size: A4	Date: 2020-06-10	**Rev: 1.0c**
KiCad E.D.A. kicad (5.1.2-1)-1		Id: 3/3