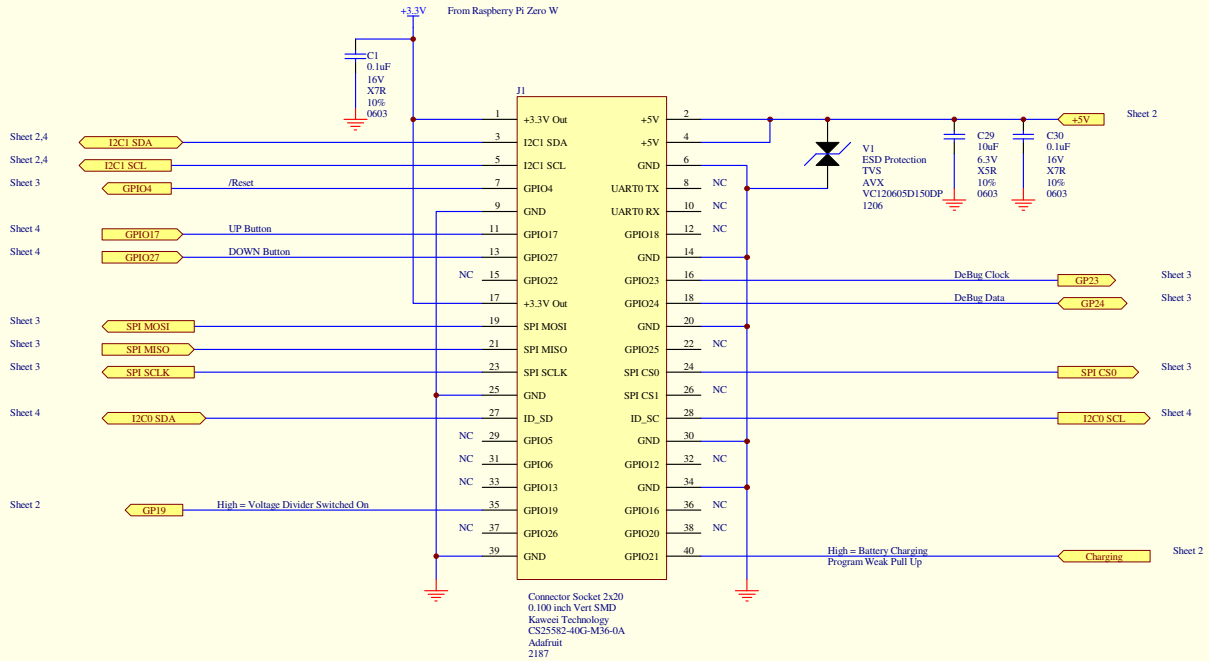

To connect a Pololu Wixel to a Raspberry Pi Zero W use the "USB" OTG connector
Use an Adafruit Product ID: 1099 (USB OTG Host Cable) and USB Cable

Raspberry Pi Zero W Connector

Kelly Designs	Project			
	Title: Explorer Board HAT			
Date: Oct 1, 2018	Size: B	FCSM No.	DWG No.: 1287	Rev: B1
File: Addy Design	Scale: None	ENG: Patrick Kelly, Jack Kelly	Sheet: 1 of 4	

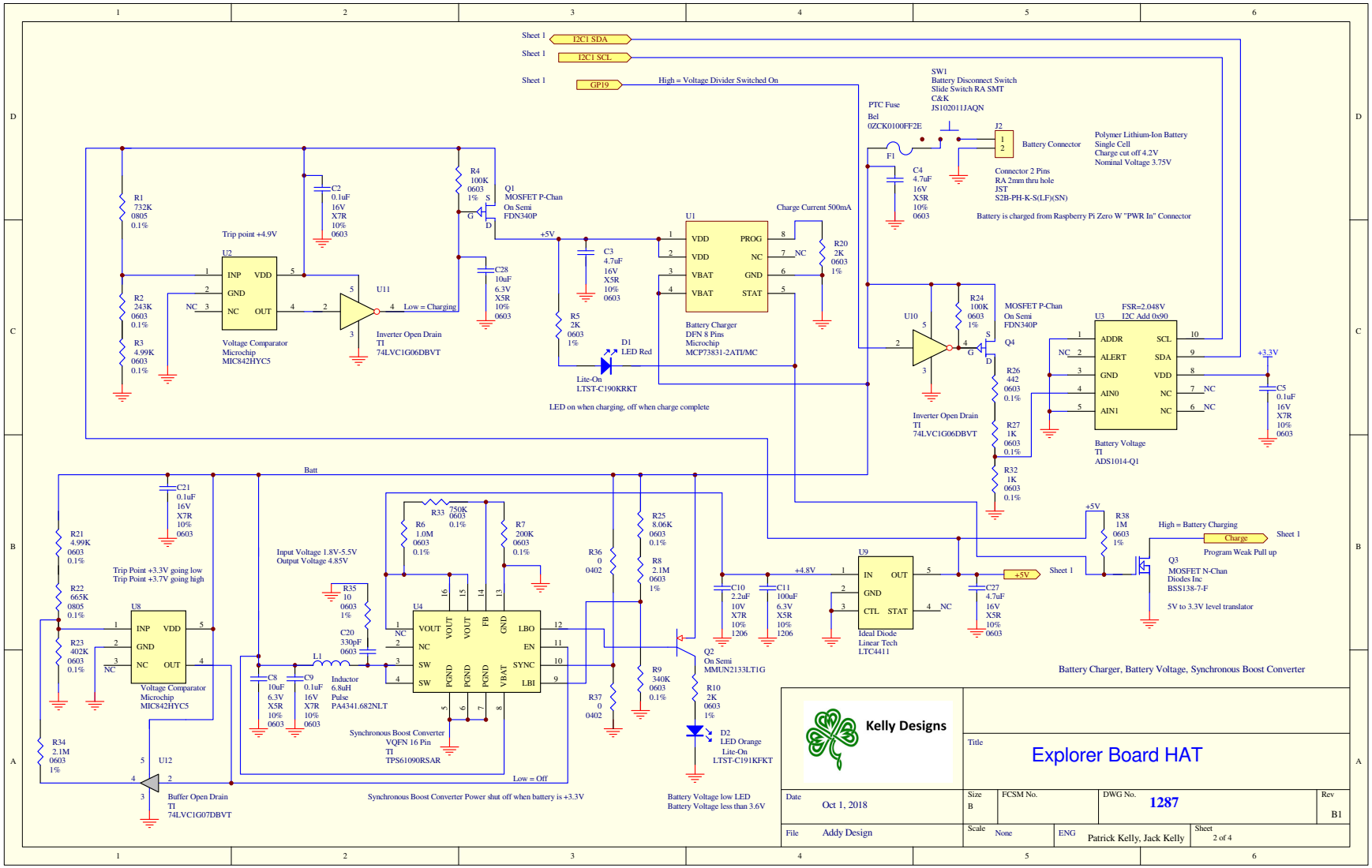
Sheet 1 I2C1 SDA
Sheet 1 I2C1 SCL
Sheet 1 GP19
High = Voltage Divider Switched On
SW1
Battery Disconnect Switch
Slide Switch RA SMT
C&K
JS102011JAQN
PTC Fuse
Bel
0ZCK0100FF2E
F1
C4
4.7uF
16V
X5R
10%
0603
J2
Battery Connector
Polymer Lithium-Ion Battery
Single Cell
Charge cut off 4.2V
Nominal Voltage 3.75V
Connector 2 Pins
RA 2mm thru hole
JST
S2B-PH-K-S(LF)(SN)
Battery is charged from Raspberry Pi Zero W "PWR In" Connector
R1
732K
0805
0.1%
R2
243K
0603
0.1%
R3
4.99K
0603
0.1%
Trip point +4.9V
U2
INP
VDD
GND
NC
OUT
Voltage Comparator
Microchip
MIC842HYC5
C2
0.1uF
16V
X7R
10%
0603
U11
Low = Charging
Inverter Open Drain
TI
74LVC1G06DBVT
R4
100K
0603
1%
Q1
MOSFET P-Chan
On Semi
FDN340P
C28
10uF
6.3V
X5R
10%
0603
+5V
C3
4.7uF
16V
X5R
10%
0603
R5
2K
0603
1%
D1
LED Red
Lite-On
LTST-C190KRKT
LED on when charging, off when charge complete
U1
VDD
VDD
VBAT
VBAT
PROG
NC
GND
STAT
Battery Charger
DFN 8 Pins
Microchip
MCP73831-2ATI/MC
Charge Current 500mA
R20
2K
0603
1%
U10
R24
100K
0603
1%
MOSFET P-Chan
On Semi
FDN340P
Q4
R26
442
0603
0.1%
R27
1K
0603
0.1%
R32
1K
0603
0.1%
Inverter Open Drain
TI
74LVC1G06DBVT
U3
FSR=2.048V
I2C Add 0x90
ADDR
ALERT
GND
AIN0
AIN1
SCL
SDA
VDD
NC
NC
Battery Voltage
TI
ADS1014-Q1
+3.3V
C5
0.1uF
16V
X7R
10%
0603
Batt
C21
0.1uF
16V
X7R
10%
0603
R21
4.99K
0603
0.1%
R22
665K
0805
0.1%
R23
402K
0603
0.1%
Trip Point +3.3V going low
Trip Point +3.7V going high
U8
INP
VDD
GND
NC
OUT
Voltage Comparator
Microchip
MIC842HYC5
R34
2.1M
0603
1%
U12
Buffer Open Drain
TI
74LVC1G07DBVT
Input Voltage 1.8V-5.5V
Output Voltage 4.85V
R35
10
0603
1%
C20
330pF
0603
L1
Inductor
6.8uH
Pulse
PA4341.682NLT
C8
10uF
6.3V
X5R
10%
0603
C9
0.1uF
16V
X7R
10%
0603
R6
1.0M
0603
0.1%
R33
750K
0603
0.1%
R7
200K
0603
0.1%
U4
VOUT
VOUT
VOUT
FB
GND
LBO
EN
SYNC
LBI
NC
NC
SW
SW
PGND
PGND
PGND
VBAT
Synchronous Boost Converter
VQFN 16 Pin
TI
TPS61090RSAR
Low = Off
Synchronous Boost Converter Power shut off when battery is +3.3V
R36
0
0402
R37
0
0402
R25
8.06K
0603
0.1%
R8
2.1M
0603
1%
R9
340K
0603
0.1%
Q2
On Semi
MMUN2133LT1G
R10
2K
0603
1%
D2
LED Orange
Lite-On
LTST-C191KFKT
Battery Voltage low LED
Battery Voltage less than 3.6V
C10
2.2uF
10V
X7R
10%
1206
C11
100uF
6.3V
X5R
10%
1206
+4.8V
U9
IN
OUT
GND
CTL
STAT
Ideal Diode
Linear Tech
LTC4411
C27
4.7uF
16V
X5R
10%
0603
+5V
Sheet 1
R38
1M
0603
1%
High = Battery Charging
Charge
Sheet 1
Program Weak Pull up
Q3
MOSFET N-Chan
Diodes Inc
BSS138-7-F
5V to 3.3V level translator
Battery Charger, Battery Voltage, Synchronous Boost Converter
Kelly Designs
Title
Explorer Board HAT
Date
Oct 1, 2018
Size
B
FCSM No.
DWG No.
1287
Rev
B1
File
Addy Design
Scale
None
ENG
Patrick Kelly, Jack Kelly
Sheet
2 of 4

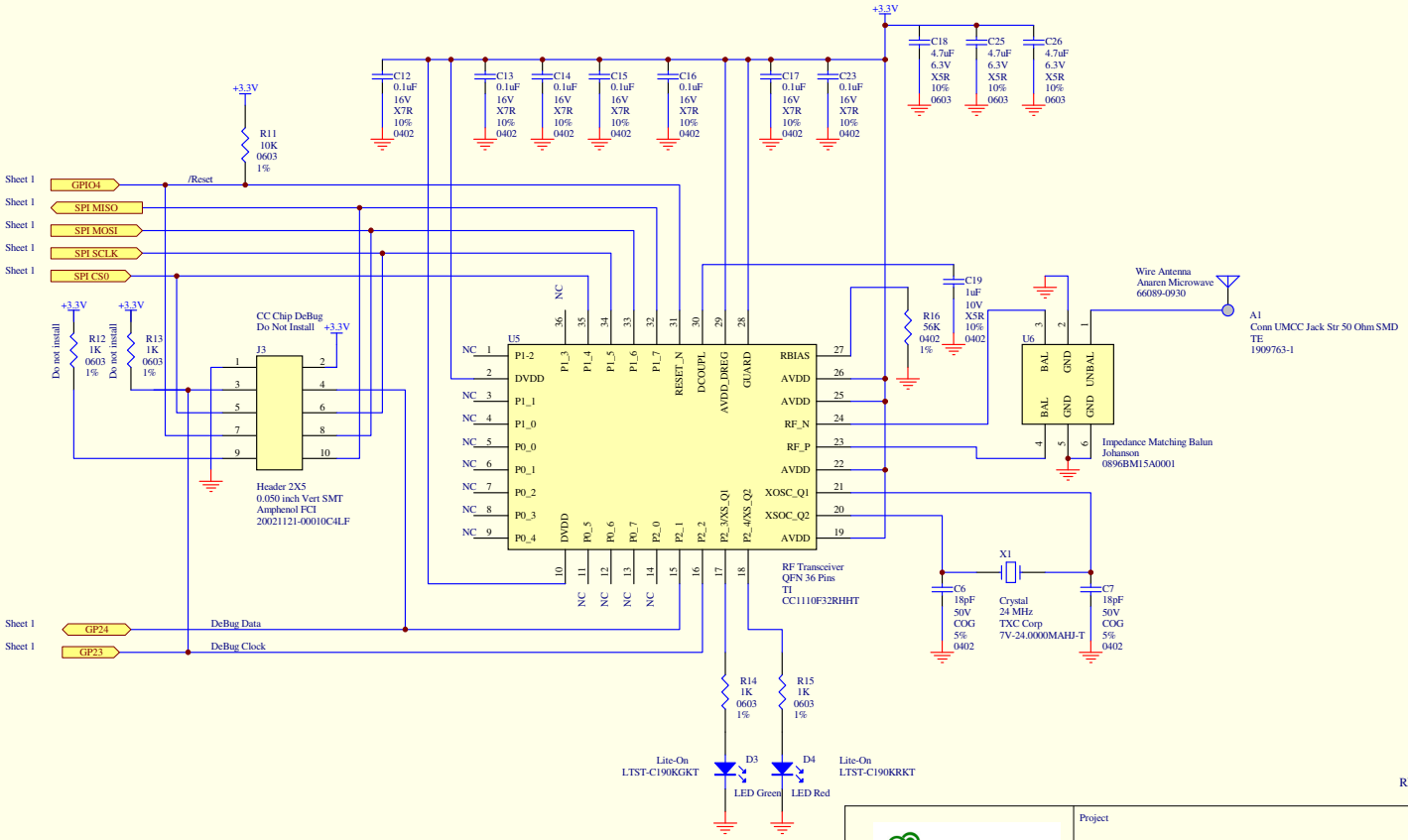

RF Transceiver

Kelly Designs

Project

Title

Explorer Board HAT

Date	Size	FCSM No.	DWG No.	Rev
Oct 1, 2018	B		1287	B1

File	Scale	ENG	Sheet
Addy Design	None	Patrick Kelly, Jack Kelly	3 of 4

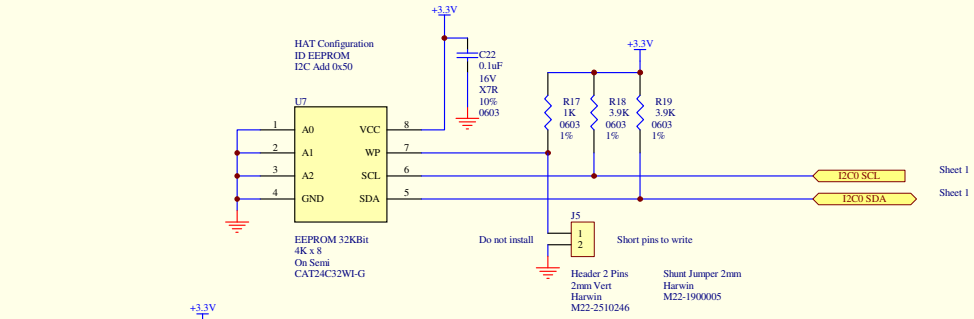

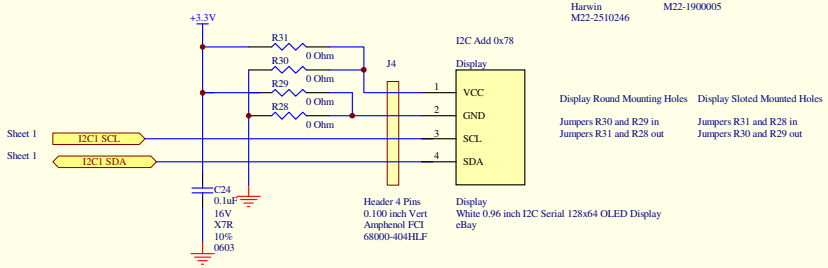

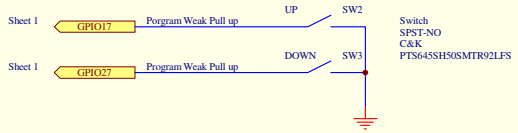

Display, Buttons, ID EEPROM

Kelly Designs

Project

Title

Explorer Board HAT

Date	Size	FCSM No.	DWG No.	Rev
Oct 1, 2018	B		1287	B1

File	Scale	ENG	Sheet
Addy Design	None	Patrick Kelly, Jack Kelly	4 of 4