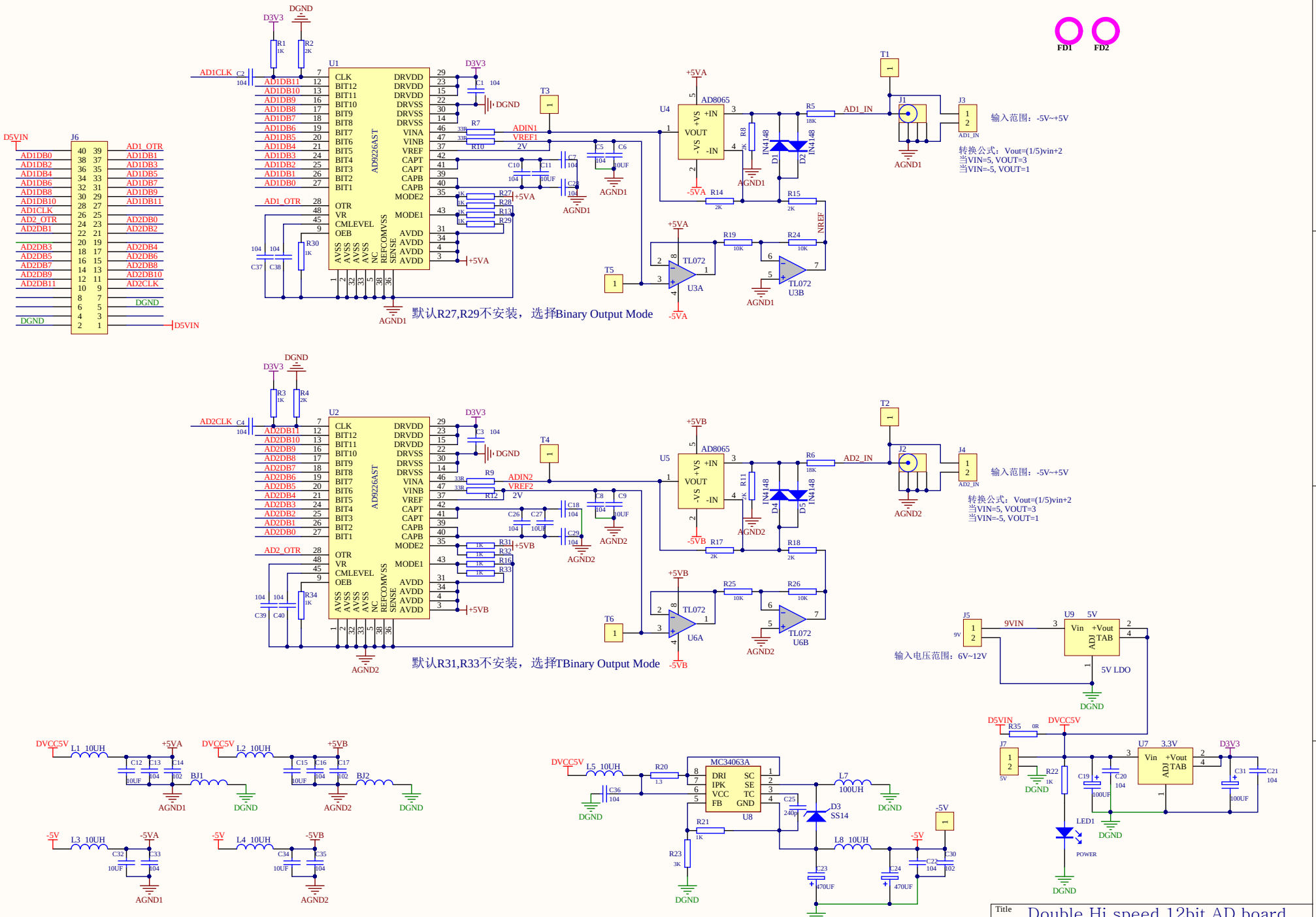
U1
AD9226AST
U2
AD9226AST
U4
AD8065
U5
AD8065
U3A
U6A
TL072
U3B
U6B
J6
J1
J2
J3
J4
J5
J7
U9
U7
U8
MC34063A
D1
D2
D3
D4
D5
LED1
POWER
FD1
FD2
输入范围：-5V~+5V
转换公式：Vout=(1/5)vin+2
当VIN=5, VOUT=3
当VIN=-5, VOUT=1
默认R27,R29不安装，选择Binary Output Mode
默认R31,R33不安装，选择TBinary Output Mode
输入电压范围：6V~12V
5V LDO
Title
Double Hi speed 12bit AD board
Size
A3
Number
WWW.HSEDA.COM
Revision
VER2.0
Date: 2019-03-20
Sheet
1 of
File: D:\work\..\AD9226V20.schDOC
Drawn By: HSEDA