/

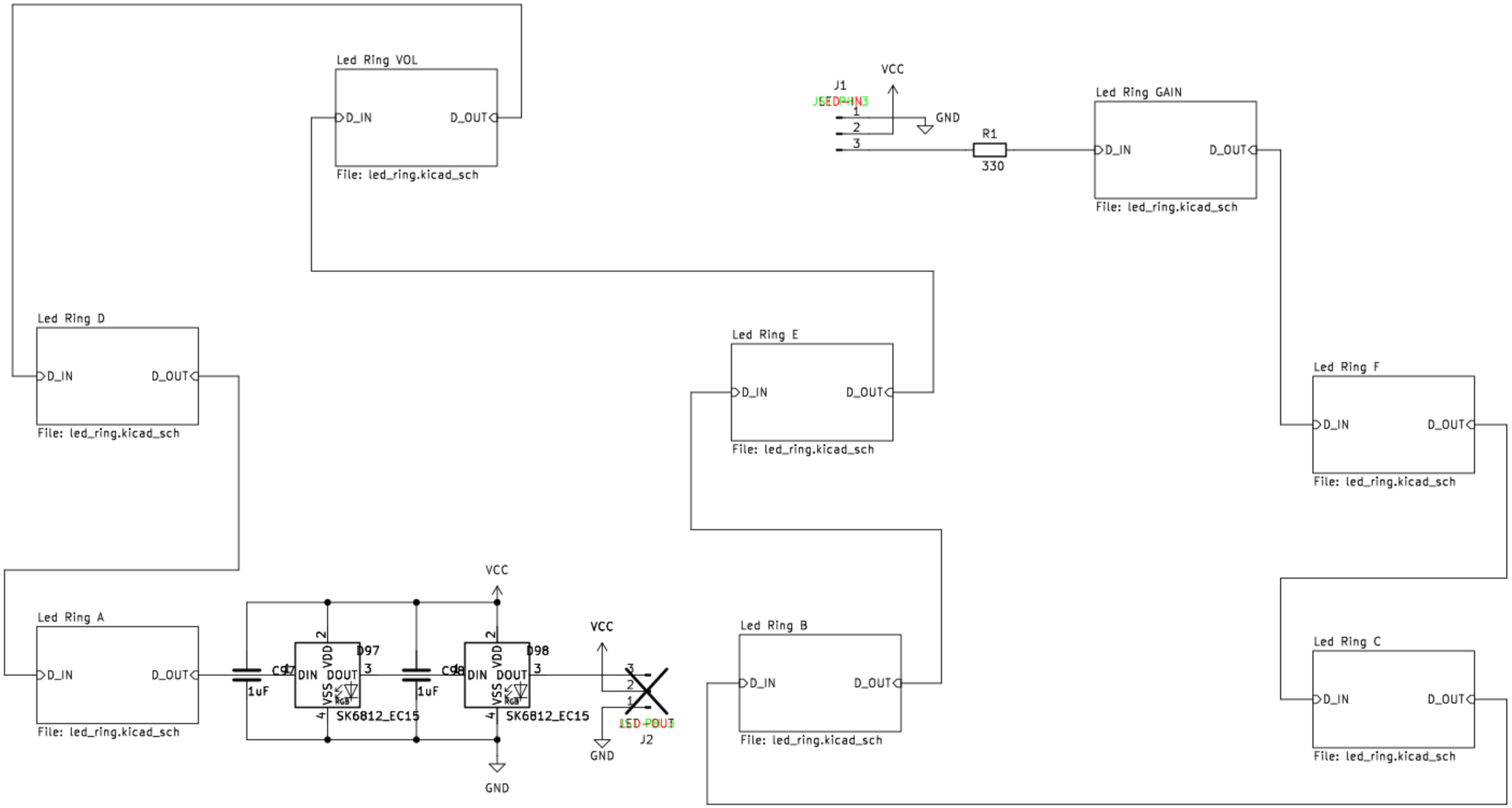
Led Ring VOL
D_IN
D_OUT
File: led_ring.kicad_sch
VCC
J1
JSEDPHN3
1
2
3
GND
R1
330
Led Ring GAIN
D_IN
D_OUT
File: led_ring.kicad_sch
Led Ring D
D_IN
D_OUT
File: led_ring.kicad_sch
Led Ring E
D_IN
D_OUT
File: led_ring.kicad_sch
Led Ring F
D_IN
D_OUT
File: led_ring.kicad_sch
Led Ring A
D_IN
D_OUT
File: led_ring.kicad_sch
C97
1uF
D97
DIN
DOUT
VDD
VSS
SK6812_EC15
C98
1uF
D98
DIN
DOUT
VDD
VSS
SK6812_EC15
VCC
GND
LED-POUT
J2
GND
Led Ring B
D_IN
D_OUT
File: led_ring.kicad_sch
Led Ring C
D_IN
D_OUT
File: led_ring.kicad_sch

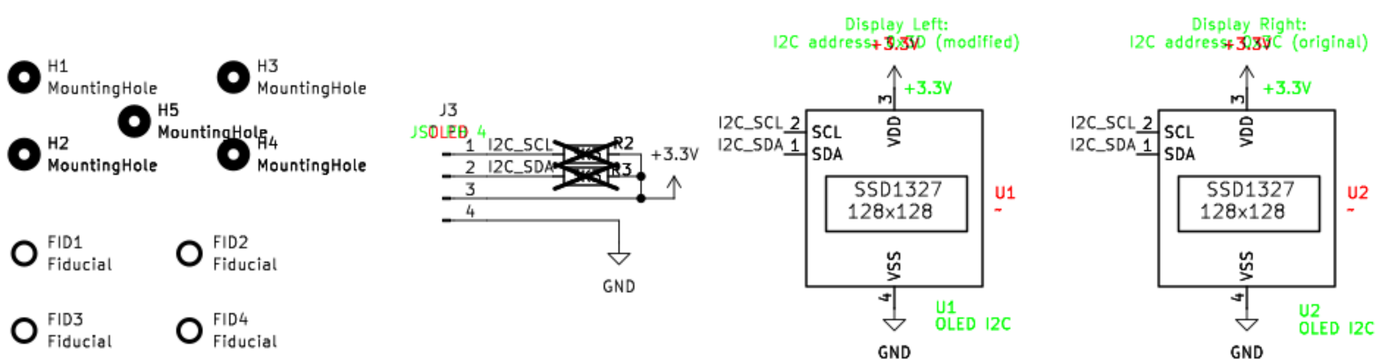
H1
MountingHole
H3
MountingHole
H5
MountingHole
H2
MountingHole
H4
MountingHole
FID1
Fiducial
FID2
Fiducial
FID3
Fiducial
FID4
Fiducial
J3
JSOLED
1
2
3
4
I2C_SCL
I2C_SDA
R2
R3
+3.3V
GND
Display Left:
I2C address 0x3D (modified)
+3.3V
I2C_SCL
I2C_SDA
SCL
SDA
VDD
VSS
SSD1327
128x128
U1
U1
OLED I2C
GND
Display Right:
I2C address 0x3C (original)
+3.3V
I2C_SCL
I2C_SDA
SCL
SDA
VDD
VSS
SSD1327
128x128
U2
U2
OLED I2C
GND

/Led Ring A

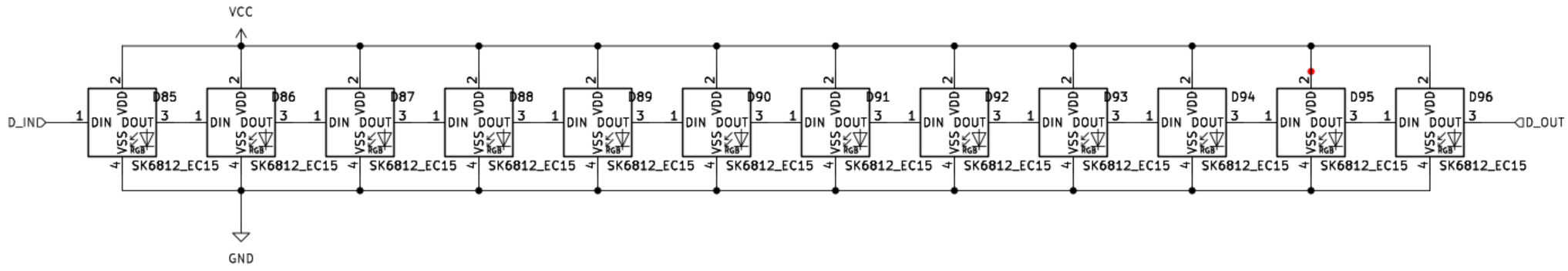
VCC
D_IN
D_OUT
D85
D86
D87
D88
D89
D90
D91
D92
D93
D94
D95
D96
DIN
DOUT
VDD
VSS
SK6812_EC15
GND

H13
Actuator

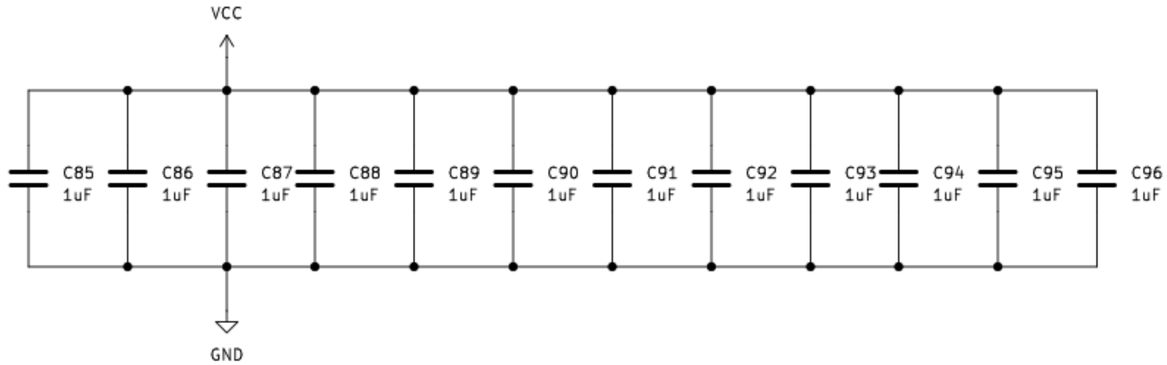
VCC
C85 1uF
C86 1uF
C87 1uF
C88 1uF
C89 1uF
C90 1uF
C91 1uF
C92 1uF
C93 1uF
C94 1uF
C95 1uF
C96 1uF
GND

/Led Ring B

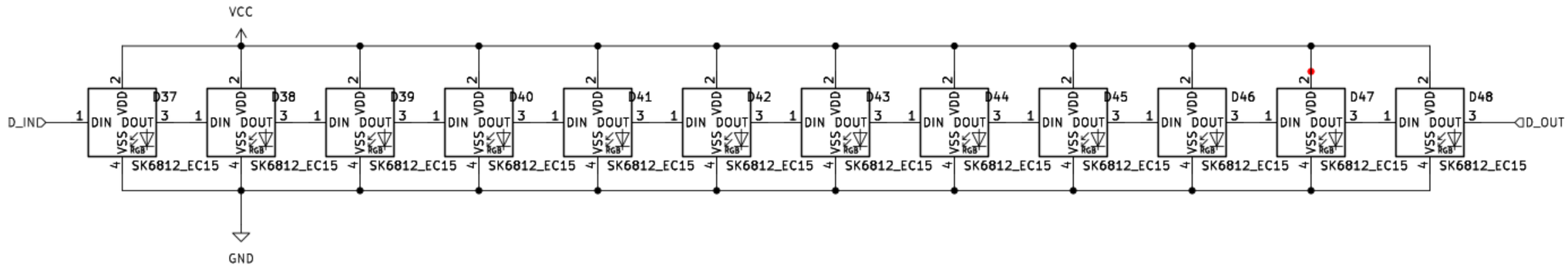
VCC
D_IN
D_OUT
GND
D37
D38
D39
D40
D41
D42
D43
D44
D45
D46
D47
D48
DIN
DOUT
VDD
VSS
SK6812_EC15

H9
Actuator

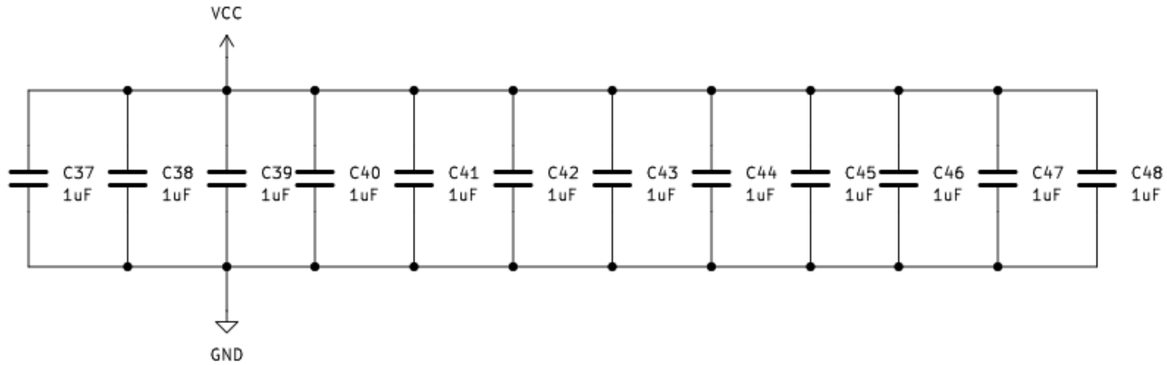
VCC
GND
C37 1uF
C38 1uF
C39 1uF
C40 1uF
C41 1uF
C42 1uF
C43 1uF
C44 1uF
C45 1uF
C46 1uF
C47 1uF
C48 1uF

/Led Ring C

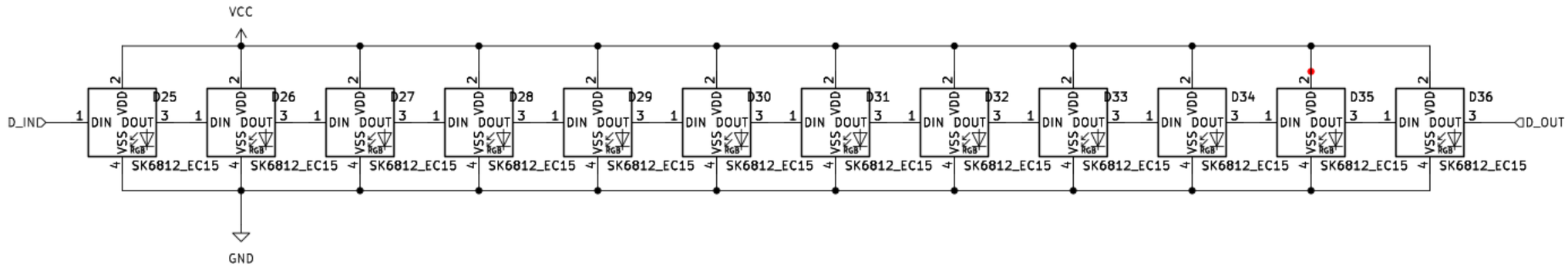

H8
Actuator

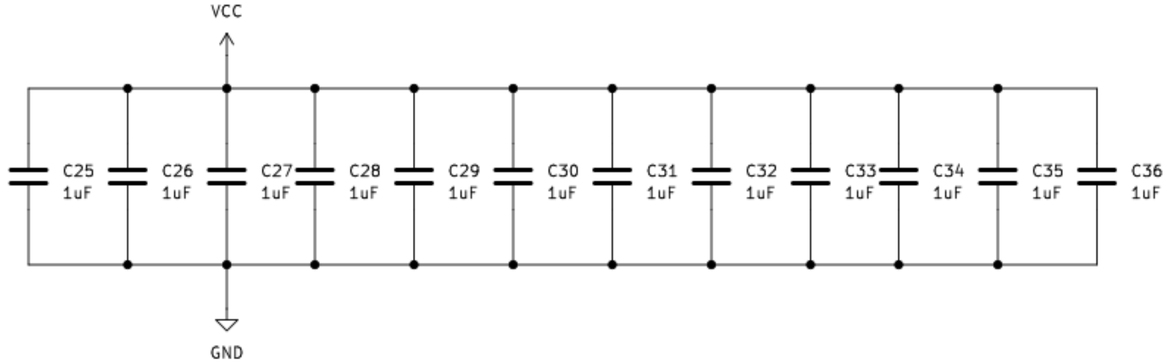

/Led Ring D

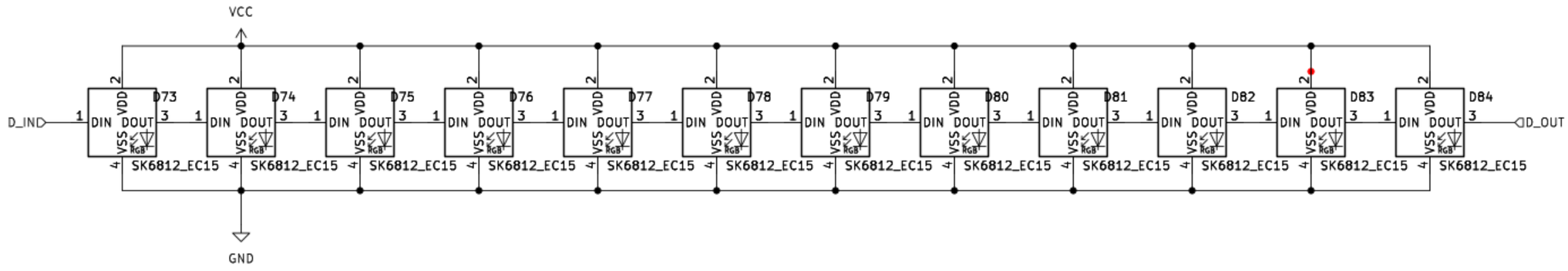

H12
Actuator

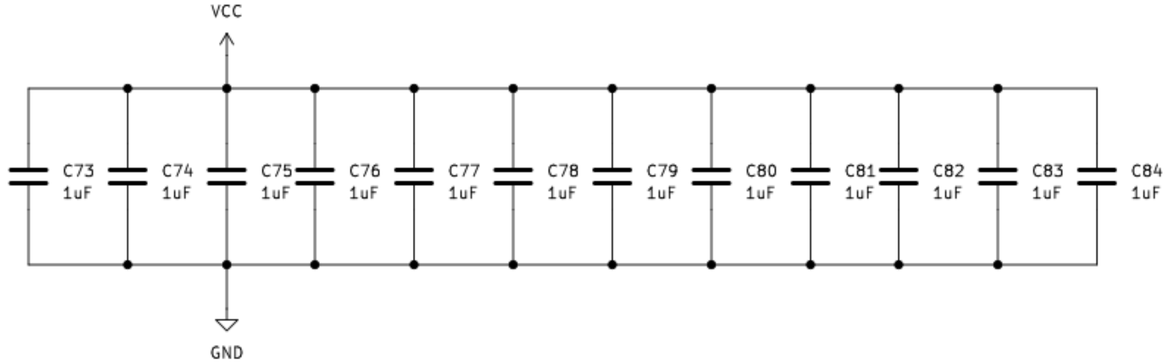

/Led Ring E

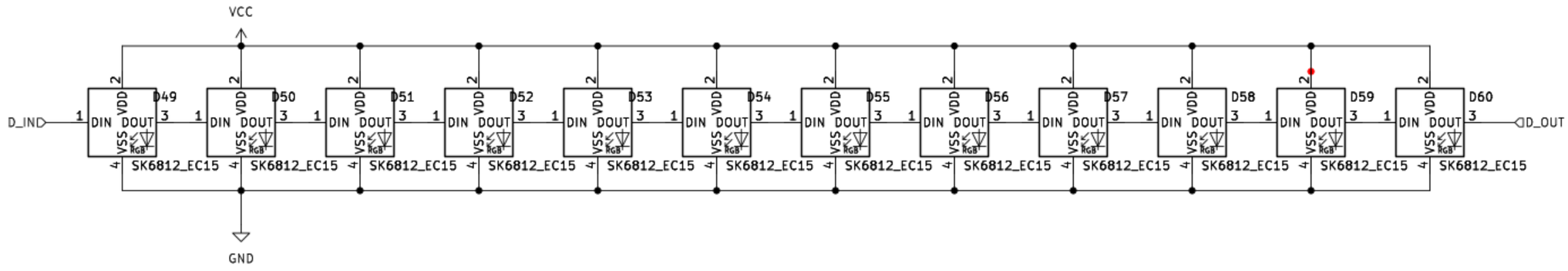

H10
Actuator

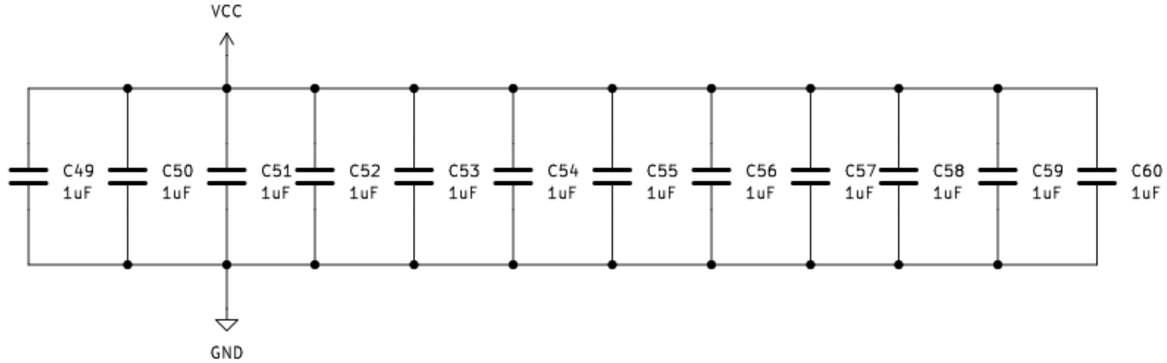

/Led Ring F

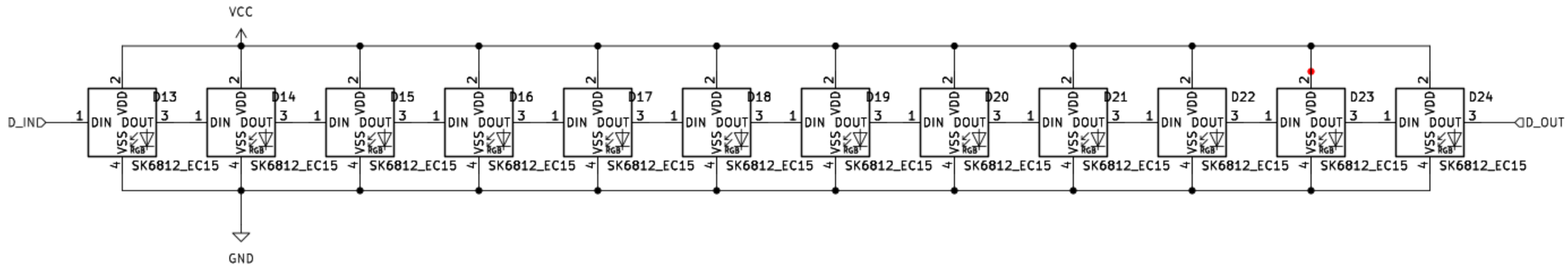
VCC
D_IN
D_OUT
GND
D13
D14
D15
D16
D17
D18
D19
D20
D21
D22
D23
D24
DIN
DOUT
VDD
VSS
SK6812_EC15

H7
Actuator

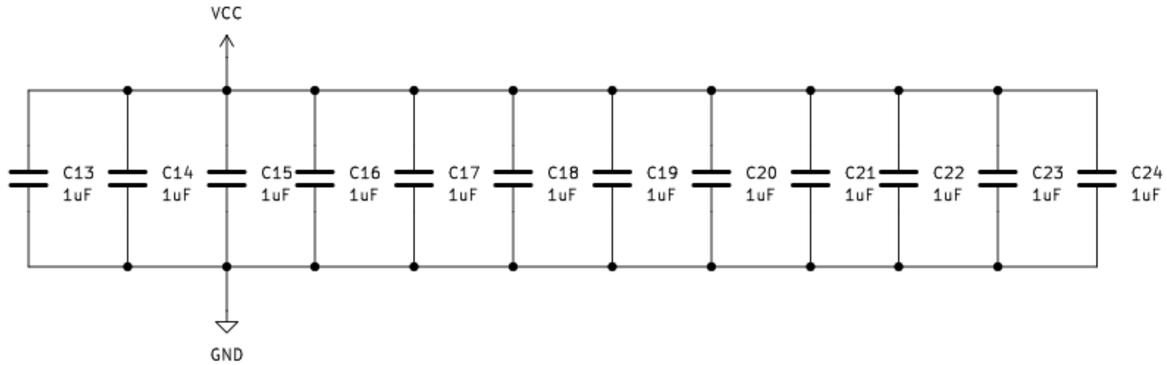
VCC
GND
C13 1uF
C14 1uF
C15 1uF
C16 1uF
C17 1uF
C18 1uF
C19 1uF
C20 1uF
C21 1uF
C22 1uF
C23 1uF
C24 1uF

/Led Ring GAIN

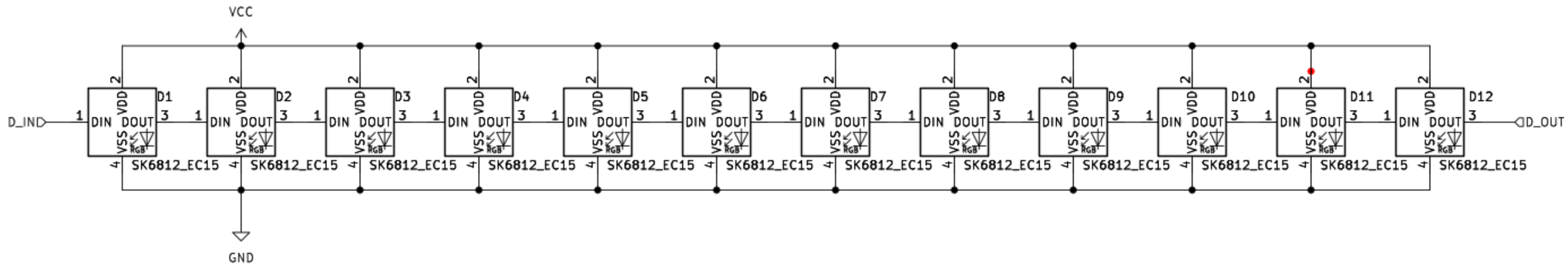

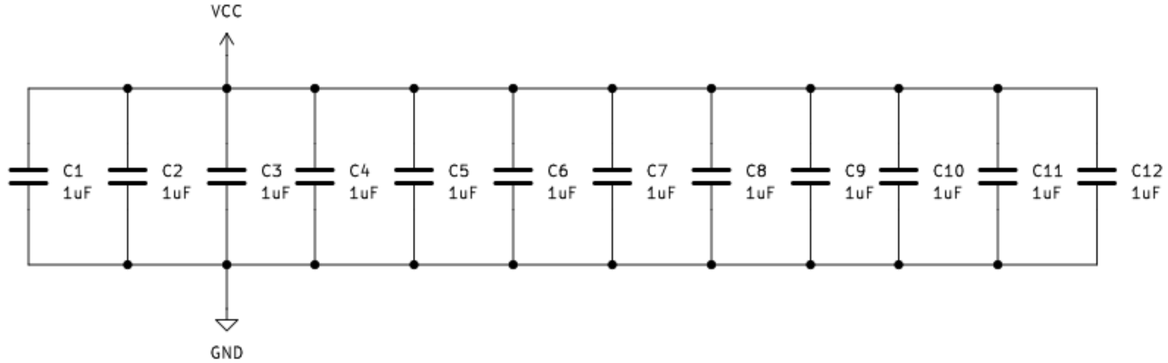

/Led Ring VOL

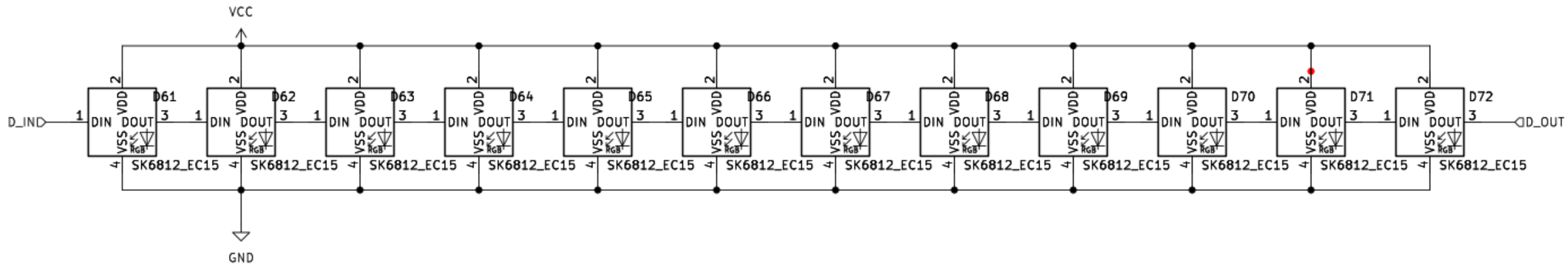
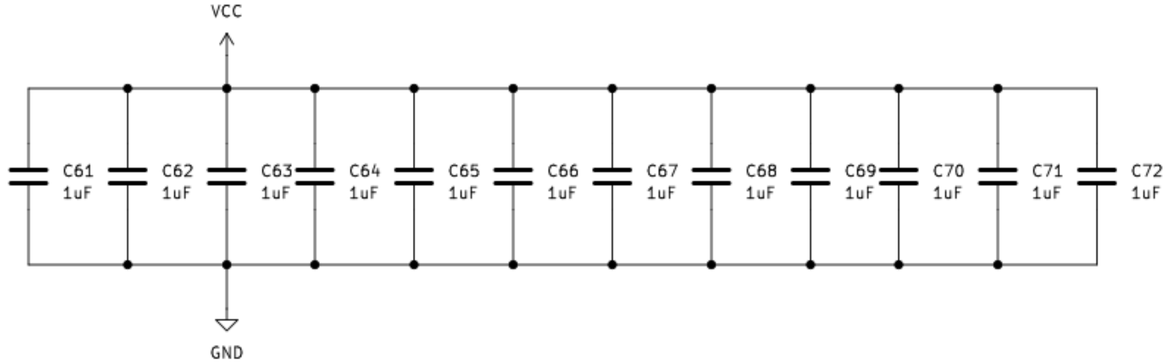
H11
Actuator