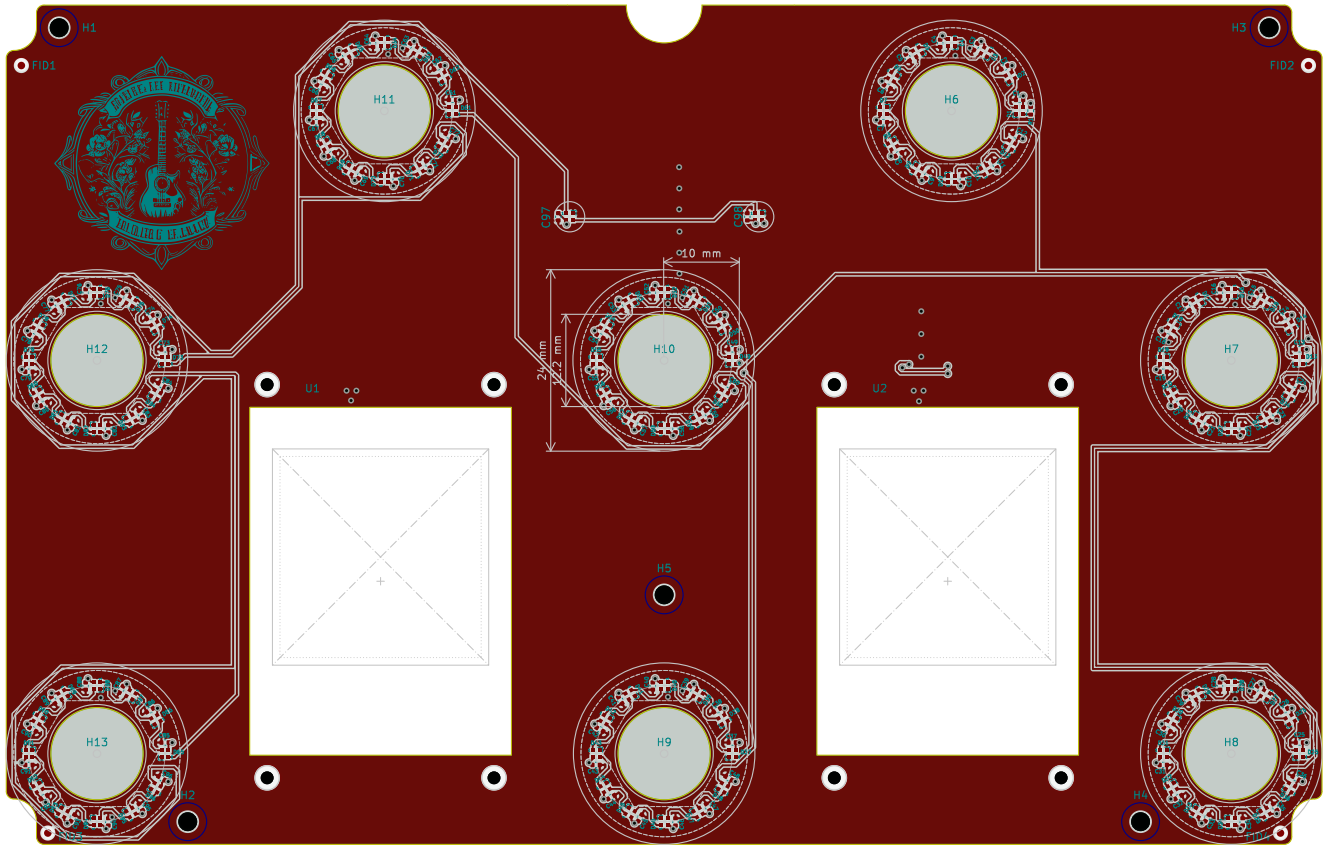


Git commit: 33b7052
License: CERN Open Hardware Licence Version 2 – Permissive
Source Code: https://github.com/pedalboard/pedalboard-display
**https://github.com/pedalboard**

Sheet: Front copper
File: pedalboard-display.kicad_pcb

***Title: Pedalboard Display***

| | | |
|---|---|---|
| Size: A4 | Date: 2024-10-16 | **Rev: 1.0.1-RC** |
| KiCad E.D.A. 9.0.7+1 + KiBot v1.8.5 | | Id: 1/6 |

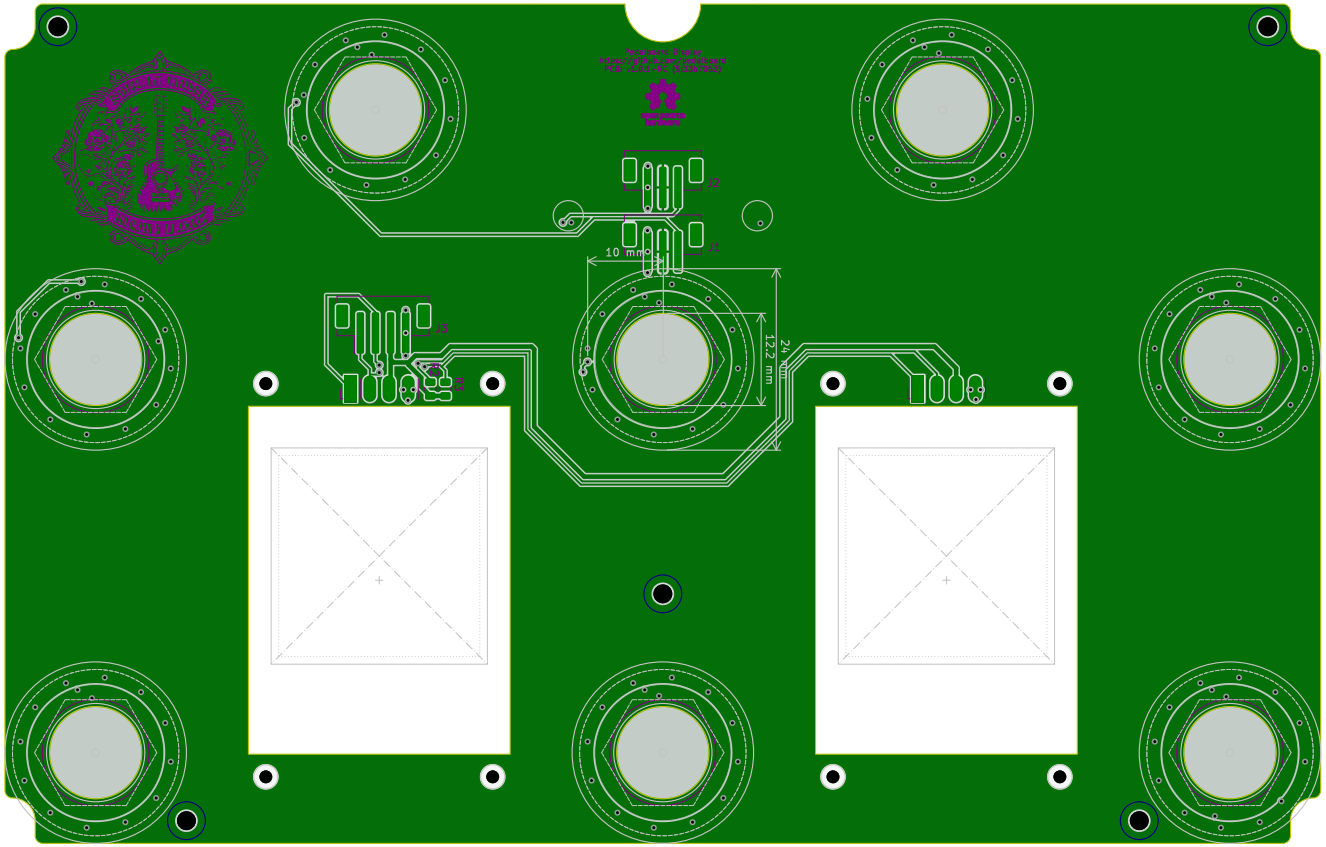


Git commit: 33b7052
License: CERN Open Hardware Licence Version 2 – Permissive
Source Code: https://github.com/pedalboard/pedalboard-display
**https://github.com/pedalboard**

Sheet: Bottom copper
File: pedalboard-display.kicad_pcb

***Title: Pedalboard Display***

| | | |
|---|---|---|
| Size: A4 | Date: 2024-10-16 | **Rev: 1.0.1-RC** |
| KiCad E.D.A. 9.0.7+1 + KiBot v1.8.5 | | Id: 2/6 |

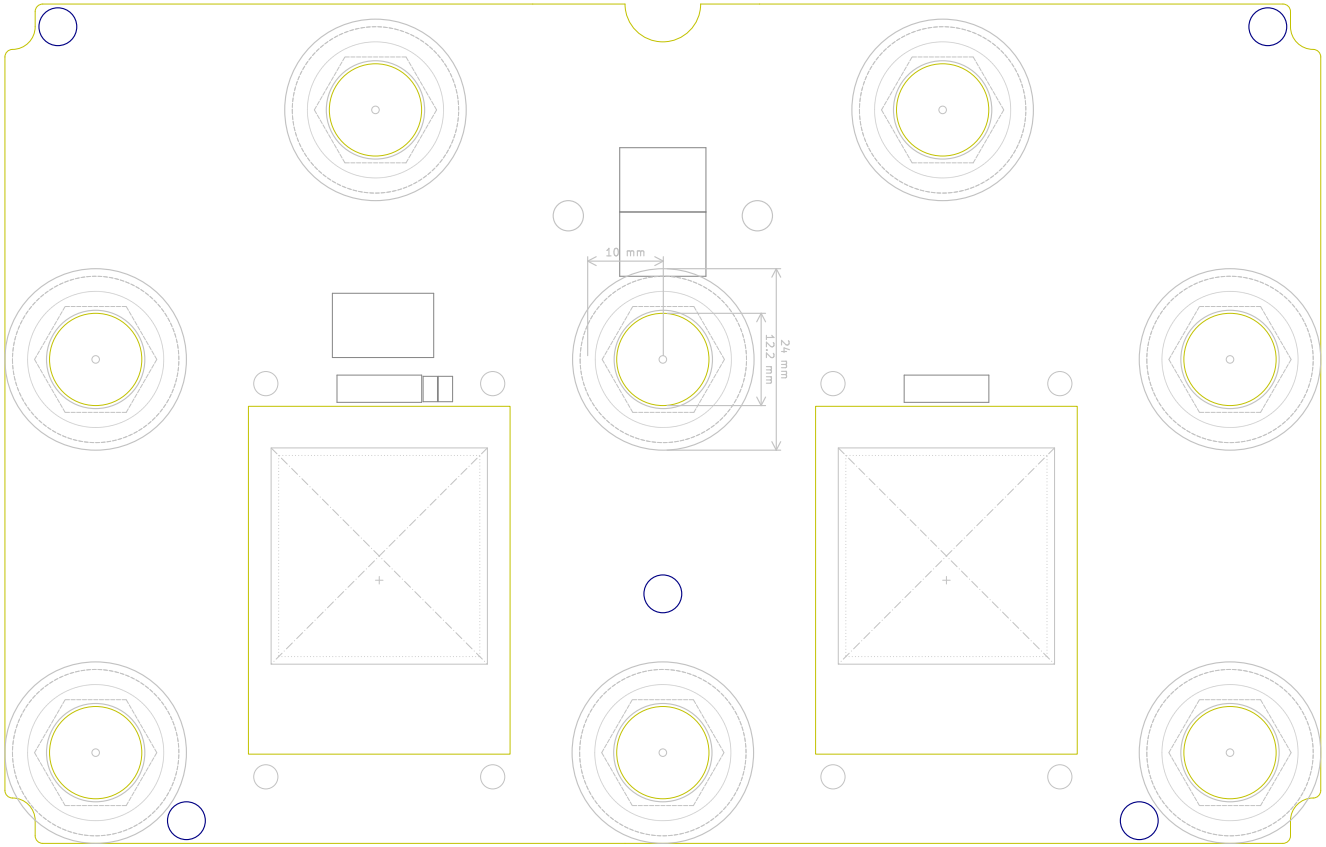


Git commit: 33b7052
License: CERN Open Hardware Licence Version 2 – Permissive
Source Code: https://github.com/pedalboard/pedalboard-display
**https://github.com/pedalboard**

Sheet: Bottom courtyard area
File: pedalboard-display.kicad_pcb

***Title: Pedalboard Display***

| | | |
|---|---|---|
| Size: A4 | Date: 2024-10-16 | **Rev: 1.0.1-RC** |
| KiCad E.D.A. 9.0.7+1 + KiBot v1.8.5 | | Id: 3/6 |

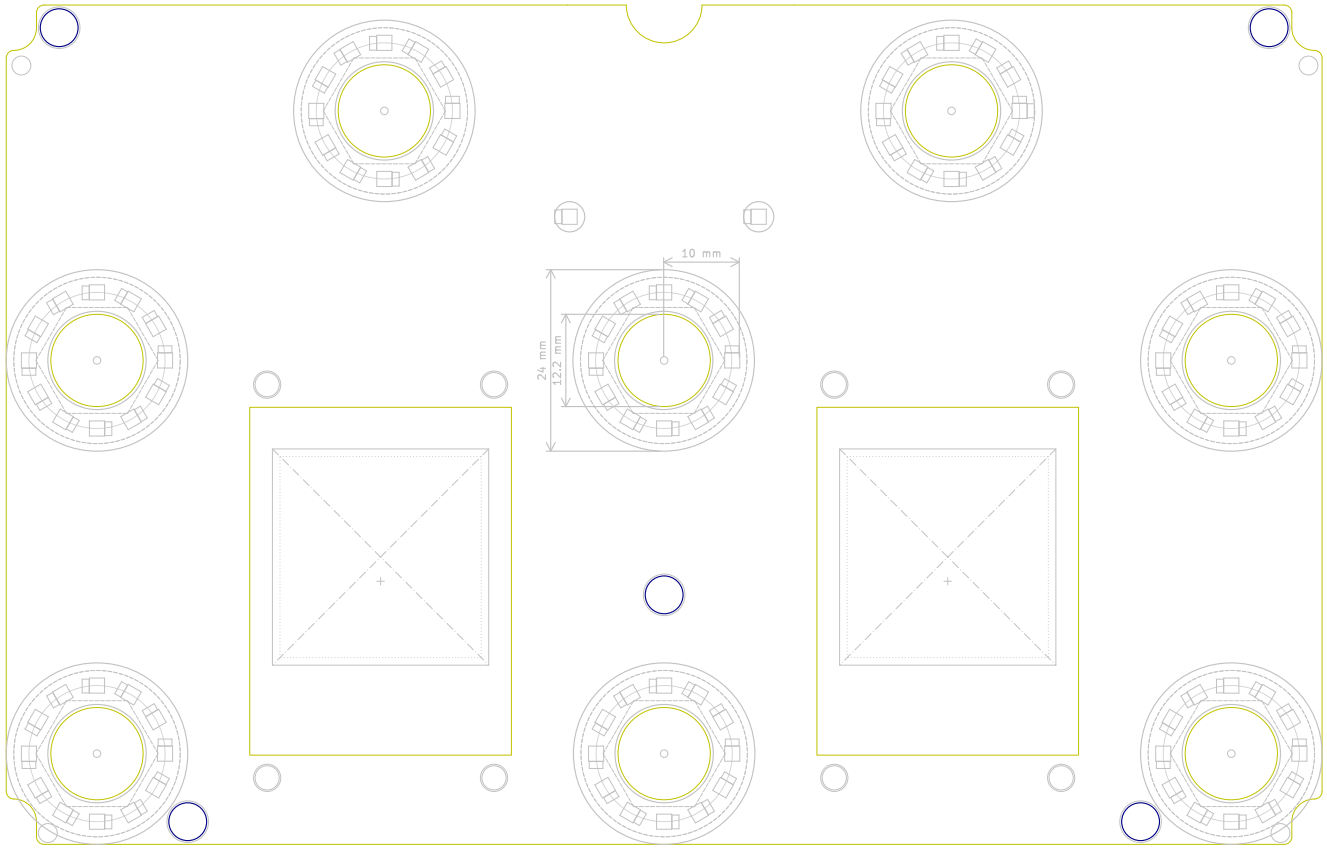


Git commit: 33b7052
License: CERN Open Hardware Licence Version 2 – Permissive
Source Code: https://github.com/pedalboard/pedalboard-display
**https://github.com/pedalboard**

Sheet: Front courtyard area
File: pedalboard-display.kicad_pcb

***Title: Pedalboard Display***

| | | |
|---|---|---|
| Size: A4 | Date: 2024-10-16 | **Rev: 1.0.1-RC** |
| KiCad E.D.A. 9.0.7+1 + KiBot v1.8.5 | | Id: 4/6 |

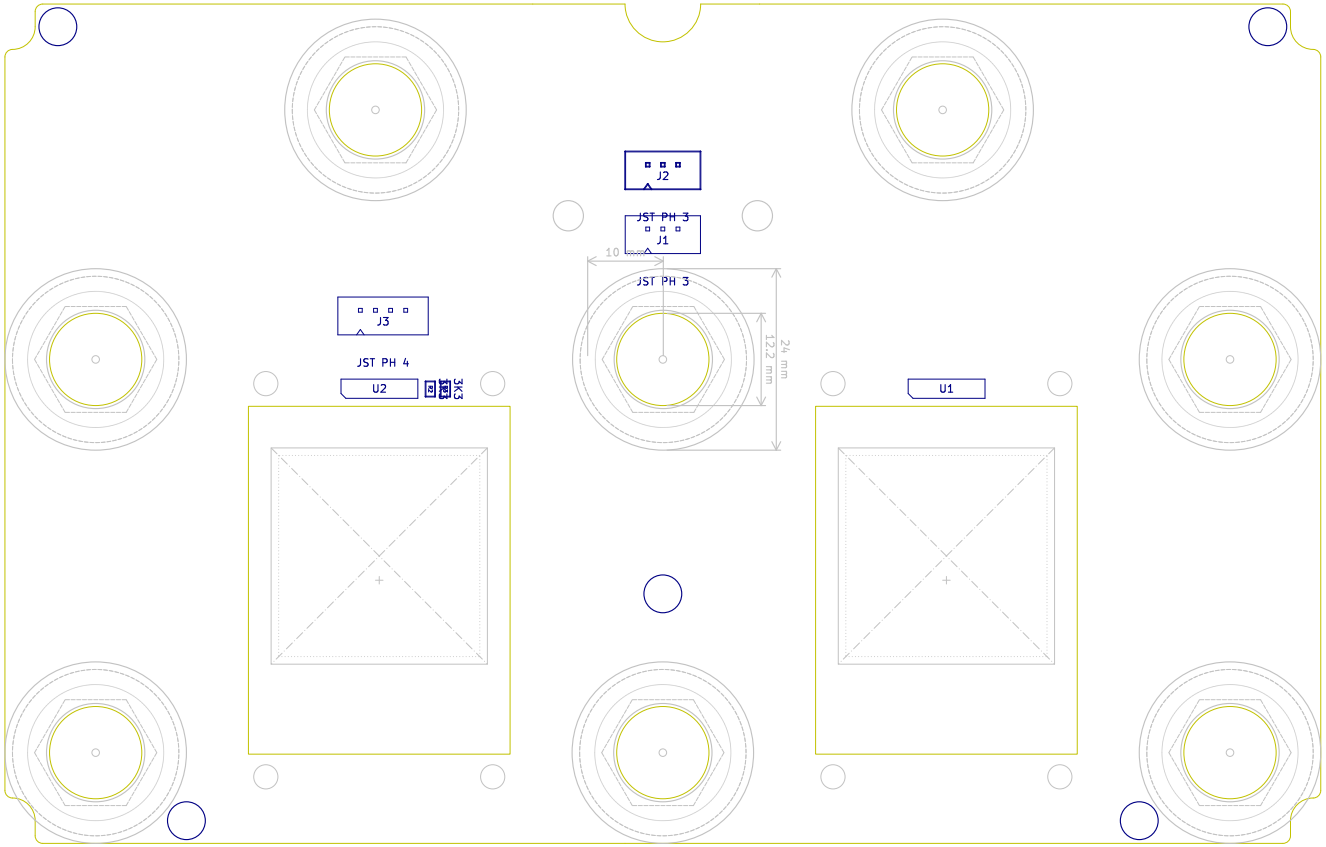


Git commit: 33b7052
License: CERN Open Hardware Licence Version 2 – Permissive
Source Code: https://github.com/pedalboard/pedalboard-display
**https://github.com/pedalboard**

Sheet: Bottom documentation
File: pedalboard-display.kicad_pcb

***Title: Pedalboard Display***

| | | |
|---|---|---|
| Size: A4 | Date: 2024-10-16 | **Rev: 1.0.1-RC** |
| KiCad E.D.A. 9.0.7+1 + KiBot v1.8.5 | | Id: 5/6 |

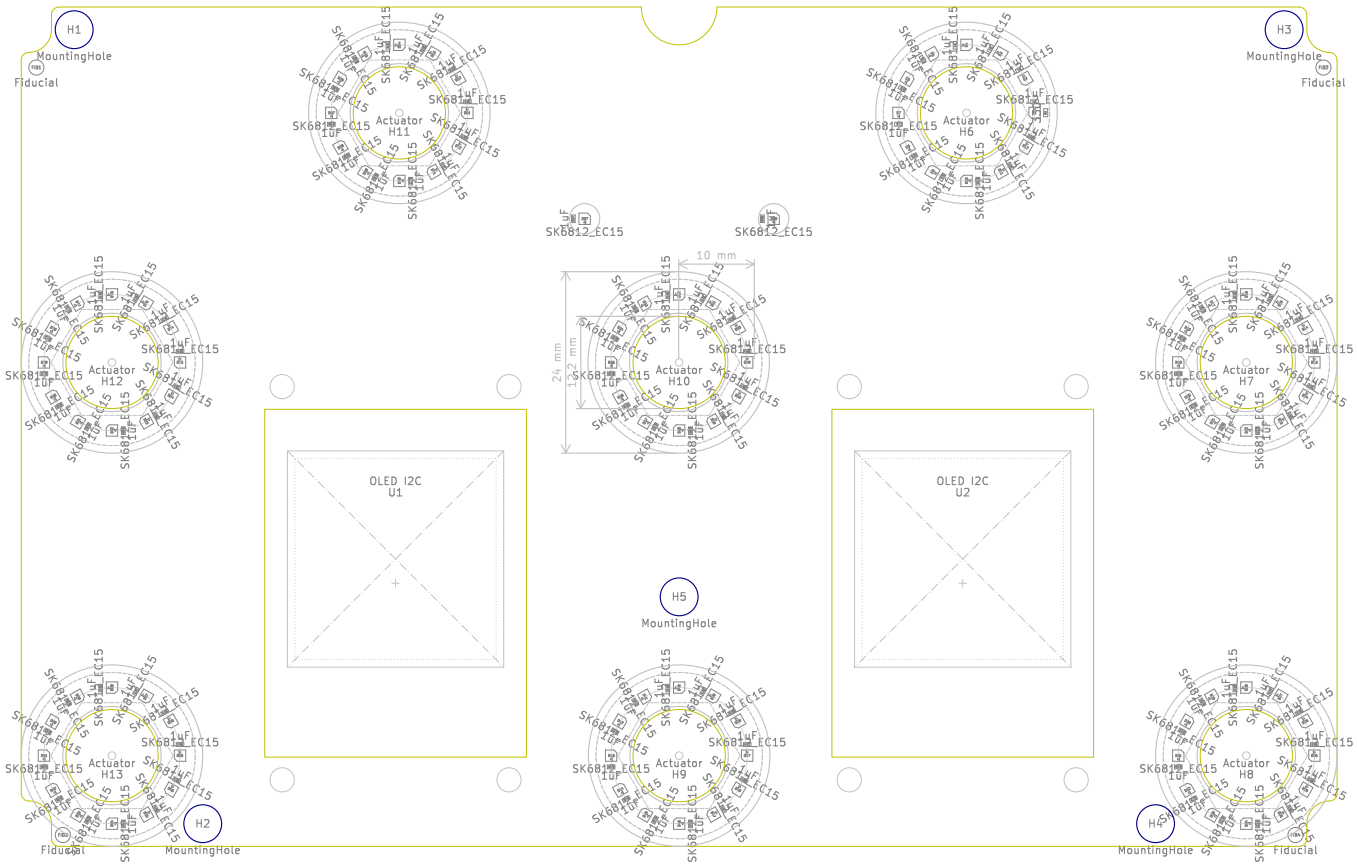


Git commit: 33b7052
License: CERN Open Hardware Licence Version 2 – Permissive
Source Code: https://github.com/pedalboard/pedalboard-display
**https://github.com/pedalboard**

Sheet: Front documentation
File: pedalboard-display.kicad_pcb

***Title: Pedalboard Display***

| | | |
|---|---|---|
| Size: A4 | Date: 2024-10-16 | **Rev: 1.0.1-RC** |
| KiCad E.D.A. 9.0.7+1 + KiBot v1.8.5 | | Id: 6/6 |