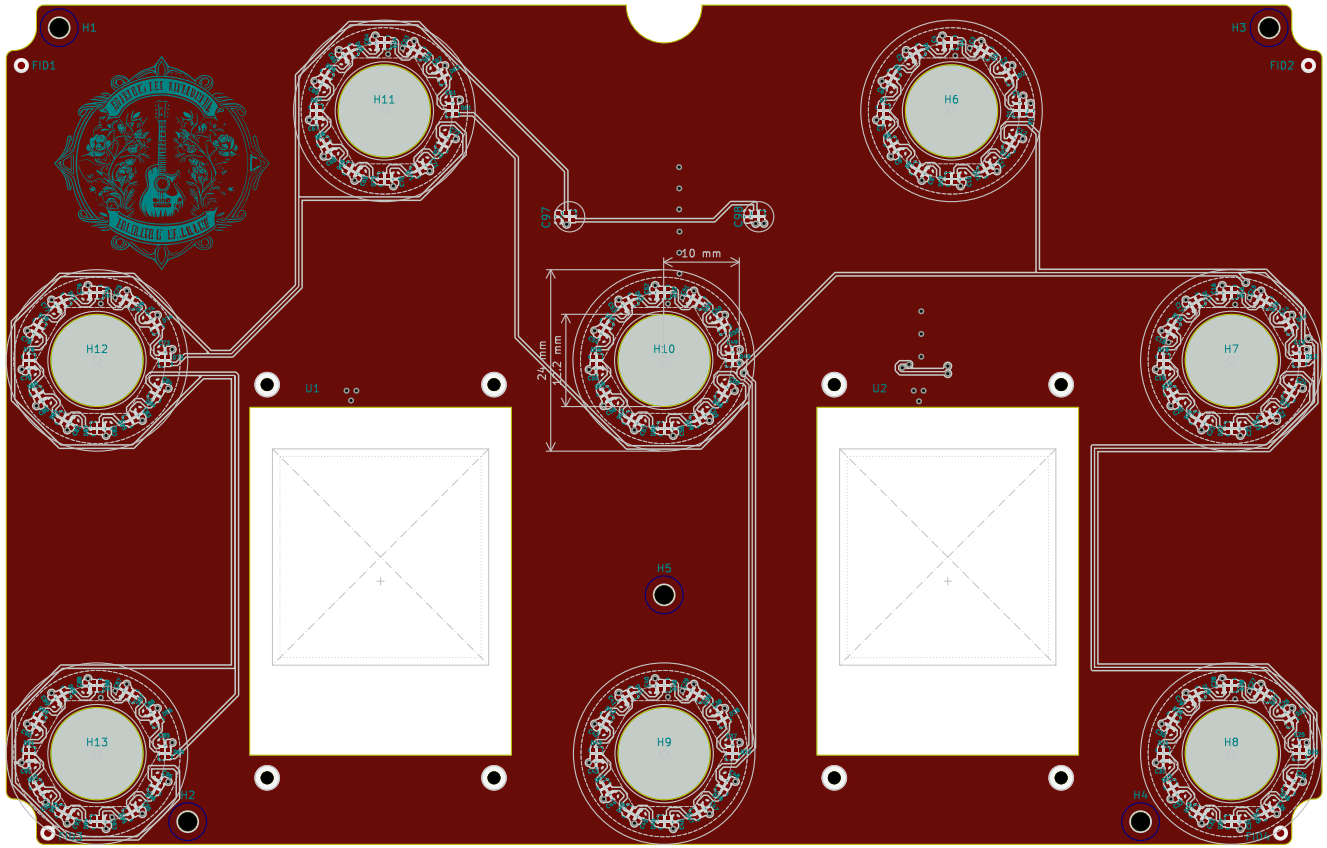

Git commit: 47610d8
License: CERN Open Hardware Licence Version 2 – Permissive
Source Code: https://github.com/pedalboard/pedalboard-display
https://github.com/pedalboard

Sheet: Front copper
File: pedalboard-display.kicad_pcb

Title: Pedalboard Display

Size: A4	Date: 2024-10-16	**Rev: dev**
KiCad E.D.A. 10.0.1-10.0.1ubuntu25.10.1 + KiBot v1.8.6		Id: 1/6

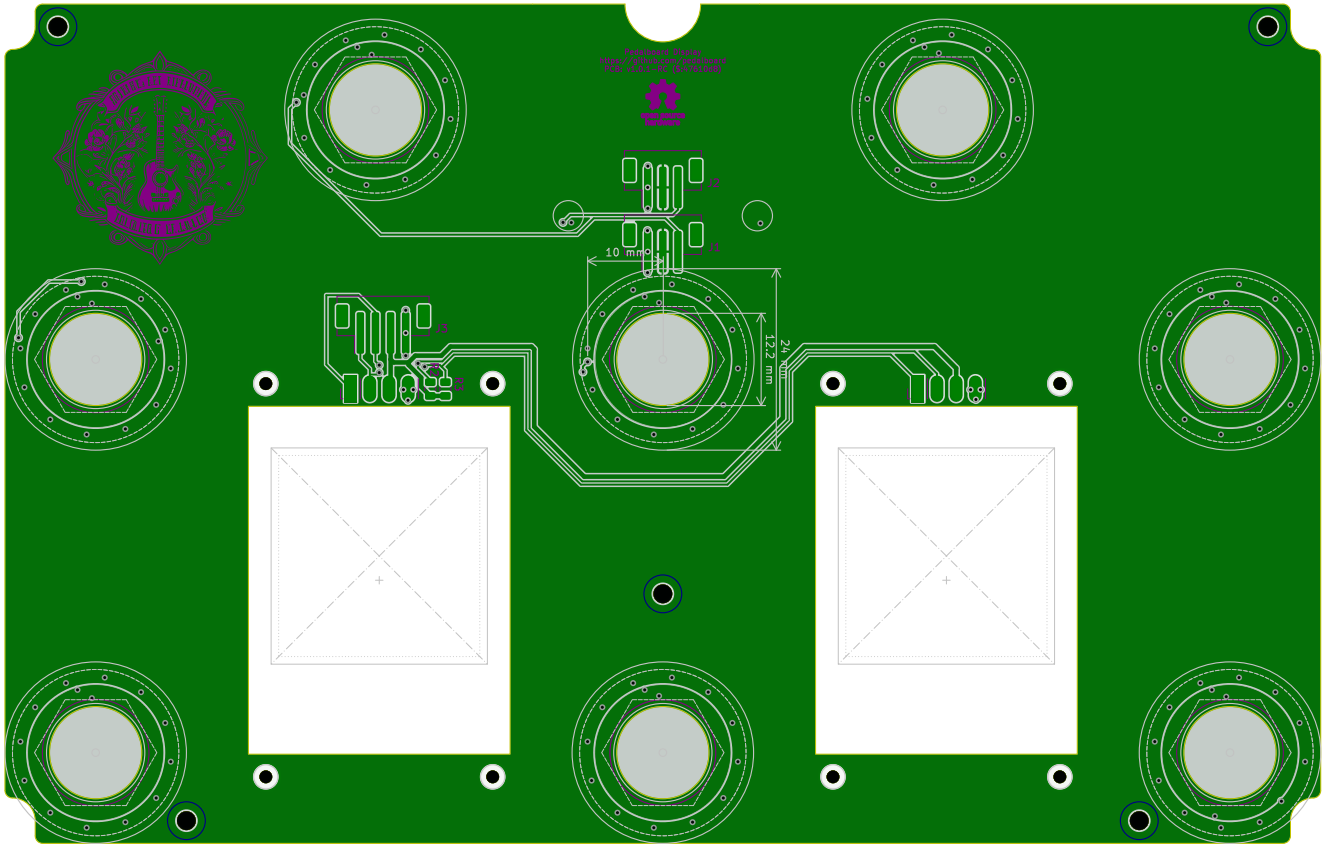

Git commit: 47610d8
License: CERN Open Hardware Licence Version 2 – Permissive
Source Code: https://github.com/pedalboard/pedalboard-display
https://github.com/pedalboard

Sheet: Bottom copper
File: pedalboard-display.kicad_pcb

Title: Pedalboard Display

Size: A4	Date: 2024-10-16	**Rev: dev**
KiCad E.D.A. 10.0.1-10.0.1ubuntu25.10.1 + KiBot v1.8.6		Id: 2/6

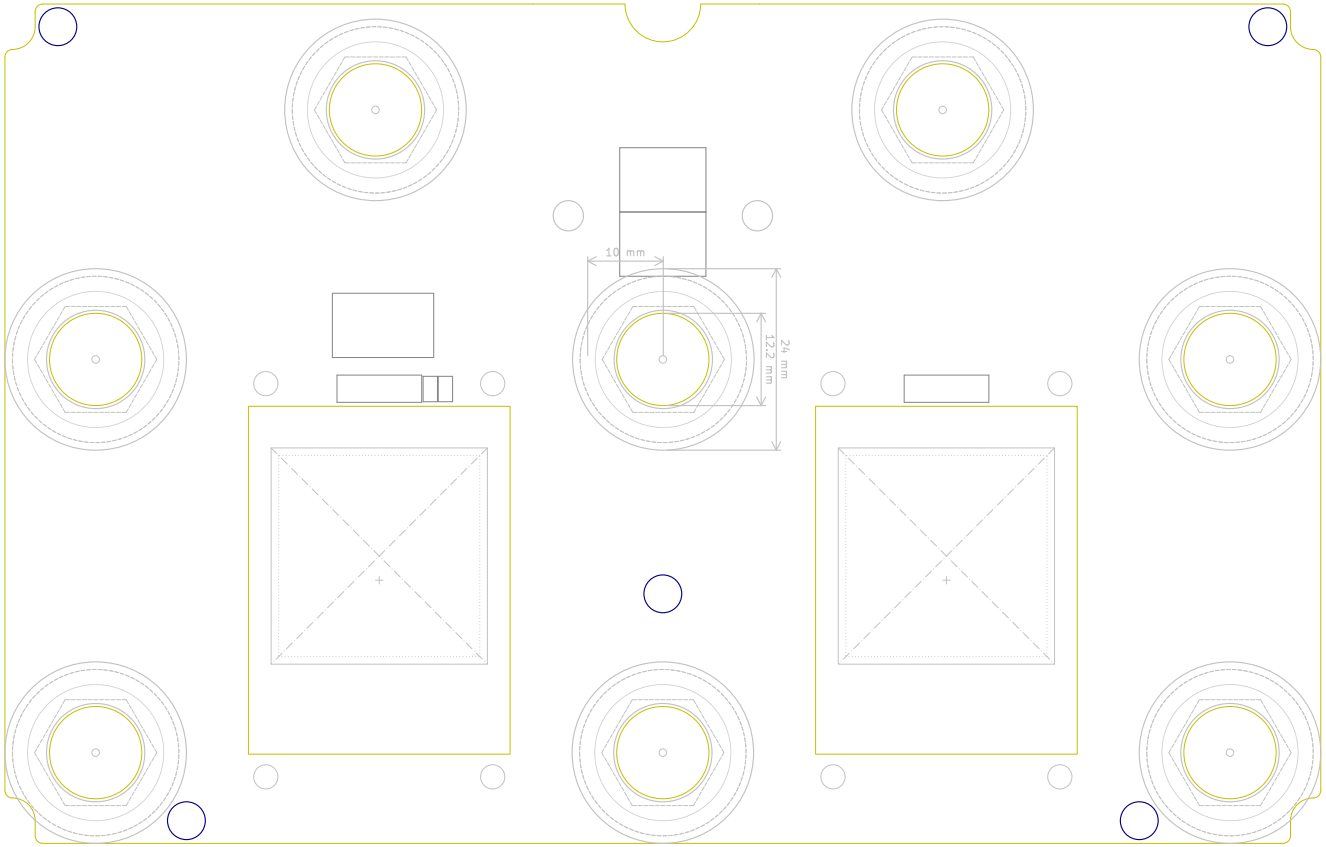

Git commit: 47610d8
License: CERN Open Hardware Licence Version 2 – Permissive
Source Code: https://github.com/pedalboard/pedalboard-display
https://github.com/pedalboard

Sheet: Bottom courtyard area
File: pedalboard-display.kicad_pcb

Title: Pedalboard Display

Size: A4	Date: 2024-10-16	**Rev: dev**
KiCad E.D.A. 10.0.1-10.0.1ubuntu25.10.1 + KiBot v1.8.6		Id: 3/6

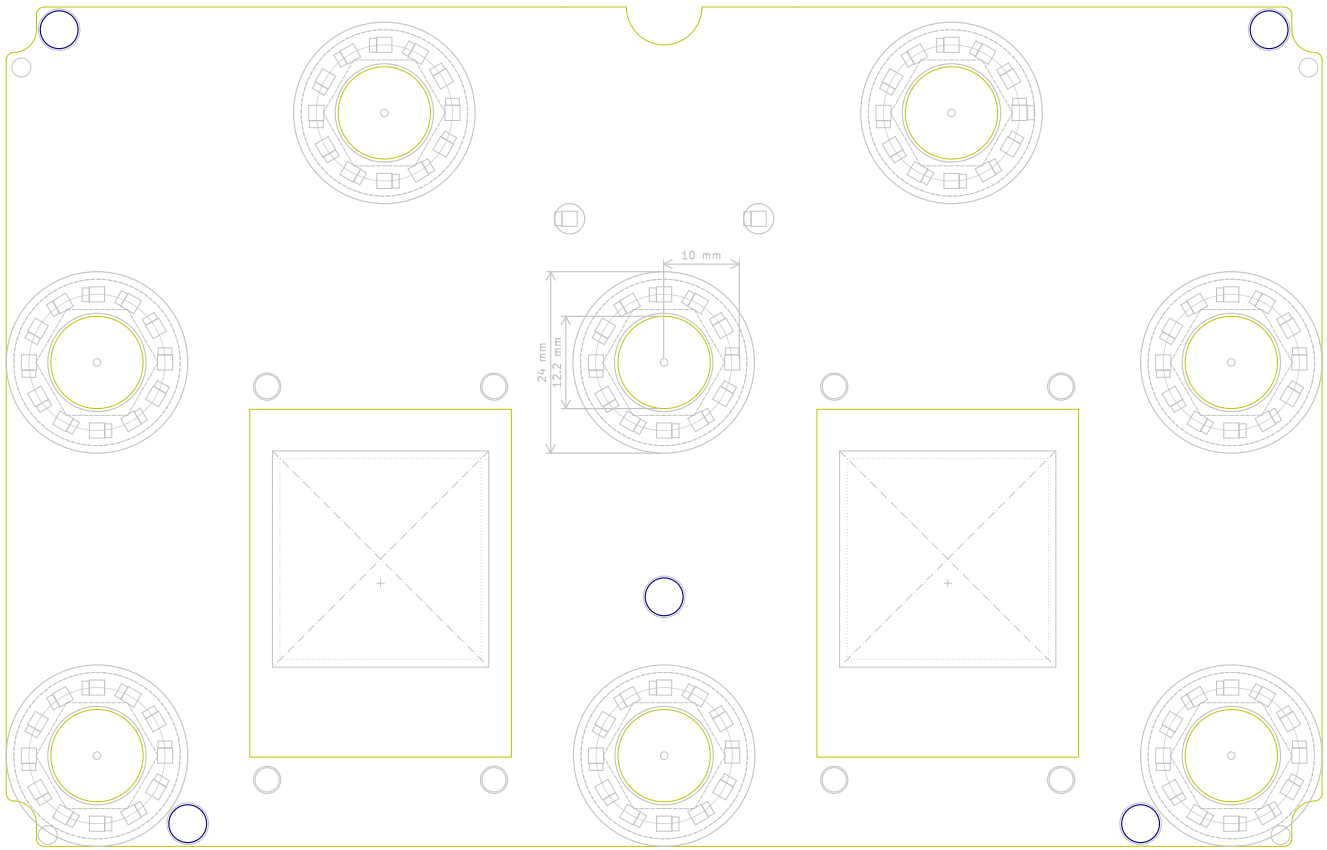

Git commit: 47610d8
License: CERN Open Hardware Licence Version 2 – Permissive
Source Code: https://github.com/pedalboard/pedalboard-display
https://github.com/pedalboard

Sheet: Front courtyard area
File: pedalboard-display.kicad_pcb

Title: Pedalboard Display

Size: A4	Date: 2024-10-16	**Rev: dev**
KiCad E.D.A. 10.0.1-10.0.1ubuntu25.10.1 + KiBot v1.8.6		Id: 4/6

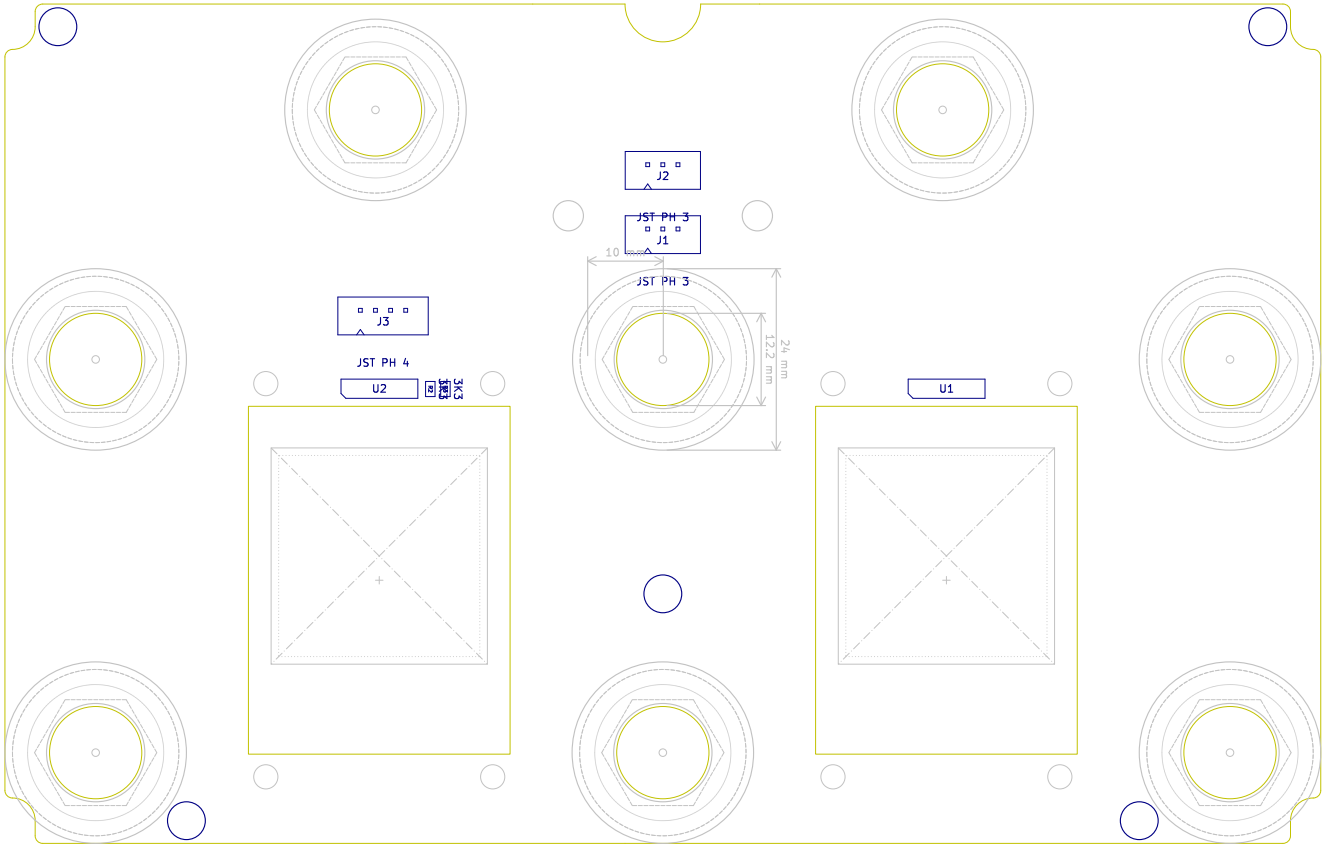

Git commit: 47610d8
License: CERN Open Hardware Licence Version 2 – Permissive
Source Code: https://github.com/pedalboard/pedalboard-display
https://github.com/pedalboard

Sheet: Bottom documentation
File: pedalboard-display.kicad_pcb

Title: Pedalboard Display

Size: A4	Date: 2024-10-16	**Rev: dev**
KiCad E.D.A. 10.0.1-10.0.1ubuntu25.10.1 + KiBot v1.8.6		Id: 5/6

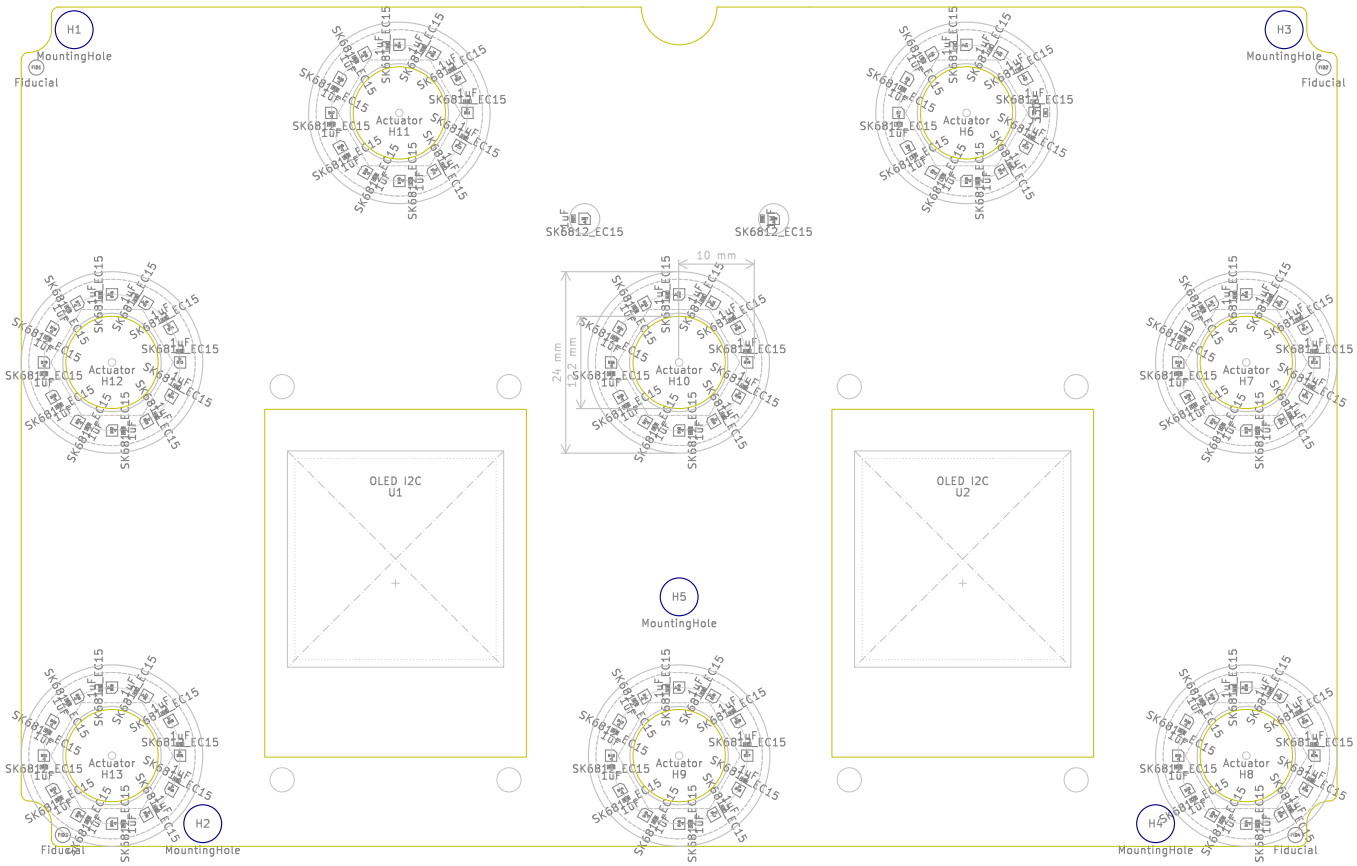

Git commit: 47610d8
License: CERN Open Hardware Licence Version 2 – Permissive
Source Code: https://github.com/pedalboard/pedalboard-display
https://github.com/pedalboard

Sheet: Front documentation
File: pedalboard-display.kicad_pcb

Title: Pedalboard Display

Size: A4	Date: 2024-10-16	**Rev: dev**
KiCad E.D.A. 10.0.1-10.0.1ubuntu25.10.1 + KiBot v1.8.6		Id: 6/6