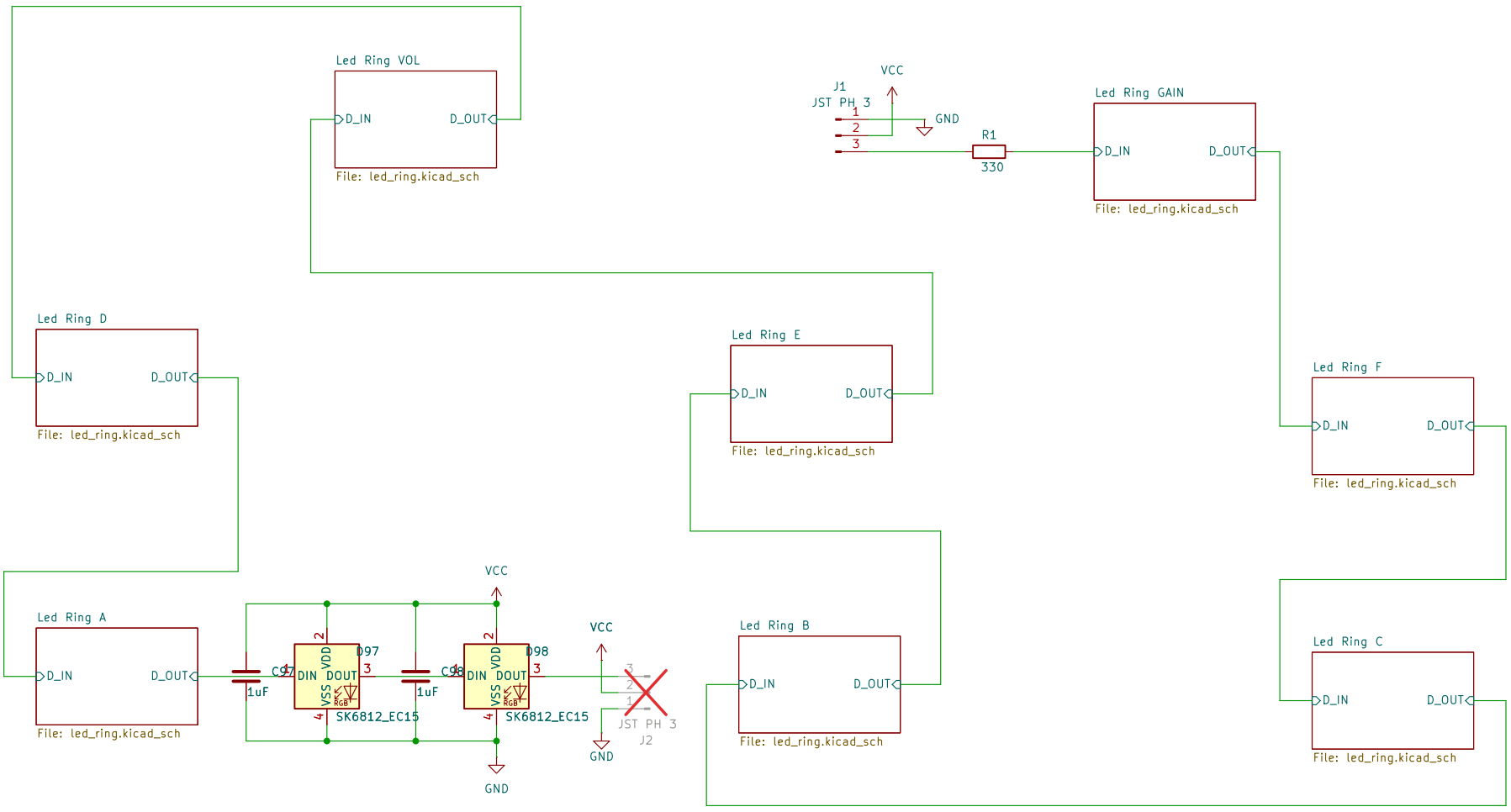

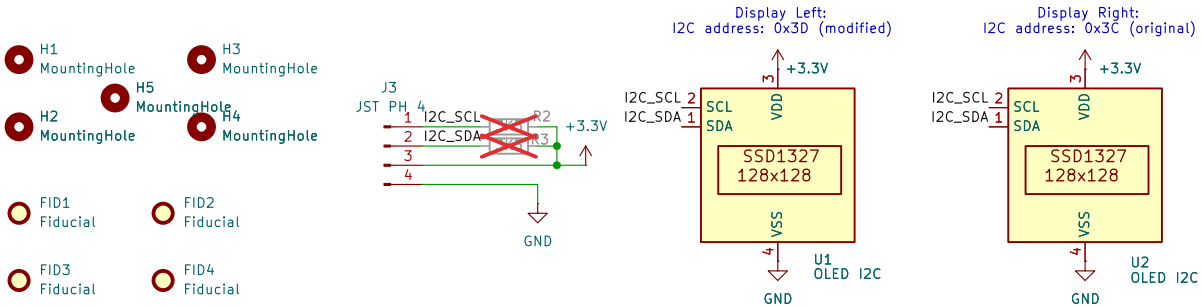

Git commit: 47610d8
License: CERN Open Hardware Licence Version 2 – Permissive
Source Code: https://github.com/pedalboard/pedalboard-display
https://github.com/pedalboard

Sheet: /
File: pedalboard-display.kicad_sch

Title: Pedalboard Display

Size: A4	Date: 2024-10-16	**Rev: 1.0.1-RC**
KiCad E.D.A. 10.0.1		Id: 1/9

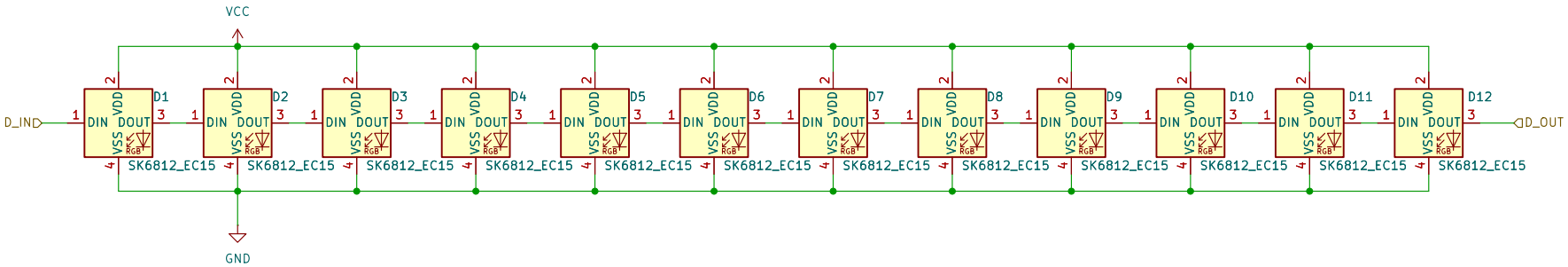

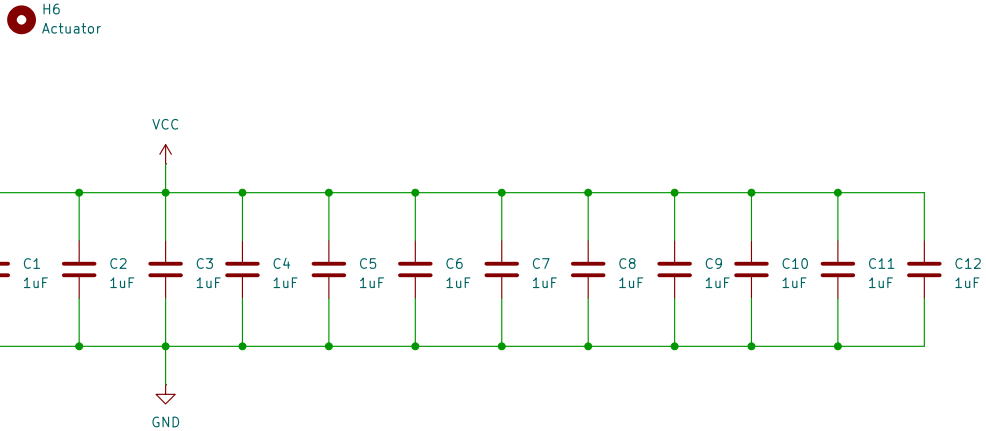

Git commit: 47610d8
License: CERN Open Hardware Licence Version 2 – Permissive
Source Code: https://github.com/pedalboard/pedalboard-display
https://github.com/pedalboard

Sheet: /Led Ring GAIN/
File: led_ring.kicad_sch

Title: Pedalboard Display

Size: A4	Date: 2024-10-16	**Rev: 1.0.1-RC**
KiCad E.D.A. 10.0.1		Id: 2/9

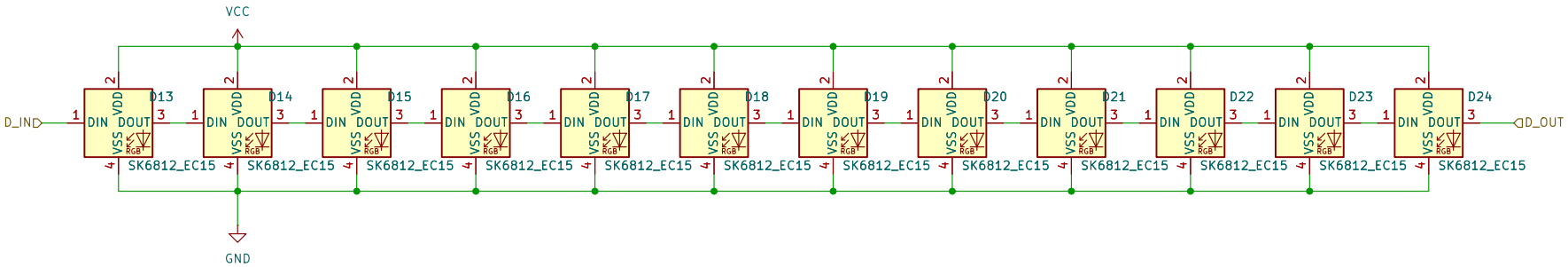

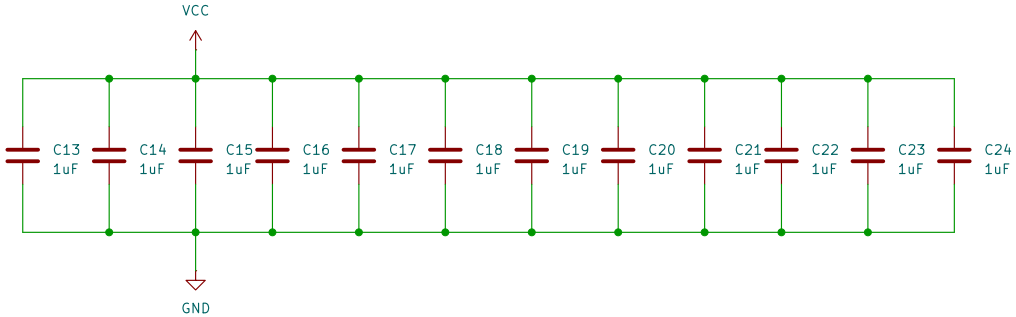

Git commit: 47610d8
License: CERN Open Hardware Licence Version 2 – Permissive
Source Code: https://github.com/pedalboard/pedalboard-display
https://github.com/pedalboard

Sheet: /Led Ring F/
File: led_ring.kicad_sch

Title: Pedalboard Display

Size: A4	Date: 2024-10-16	**Rev: 1.0.1-RC**
KiCad E.D.A. 10.0.1		Id: 3/9

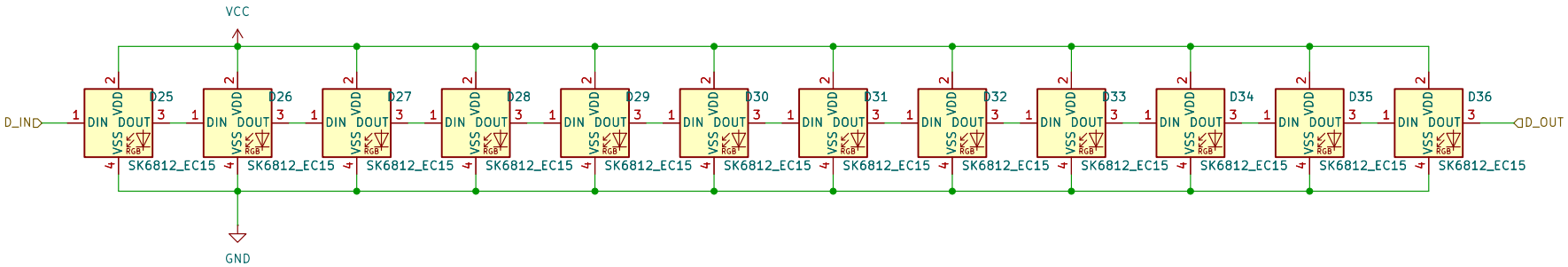

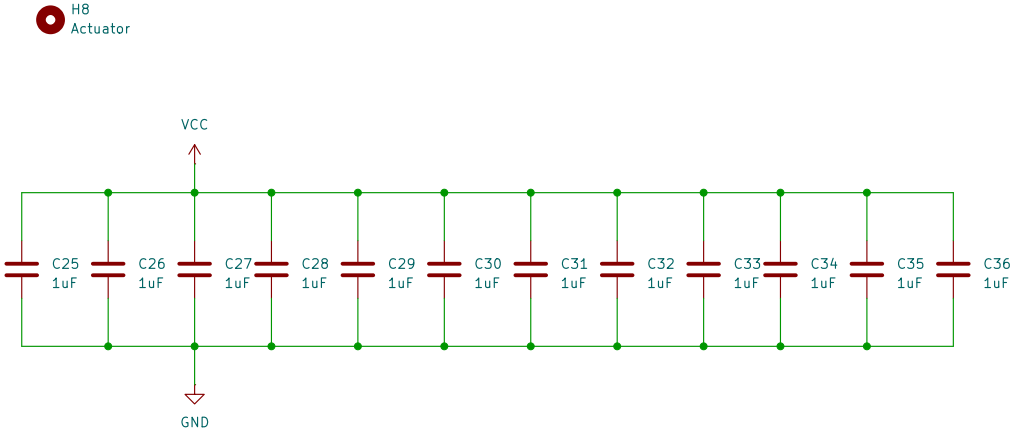

Git commit: 47610d8
License: CERN Open Hardware Licence Version 2 – Permissive
Source Code: https://github.com/pedalboard/pedalboard-display
https://github.com/pedalboard

Sheet: /Led Ring C/
File: led_ring.kicad_sch

Title: Pedalboard Display

Size: A4	Date: 2024-10-16	**Rev: 1.0.1-RC**
KiCad E.D.A. 10.0.1		Id: 4/9

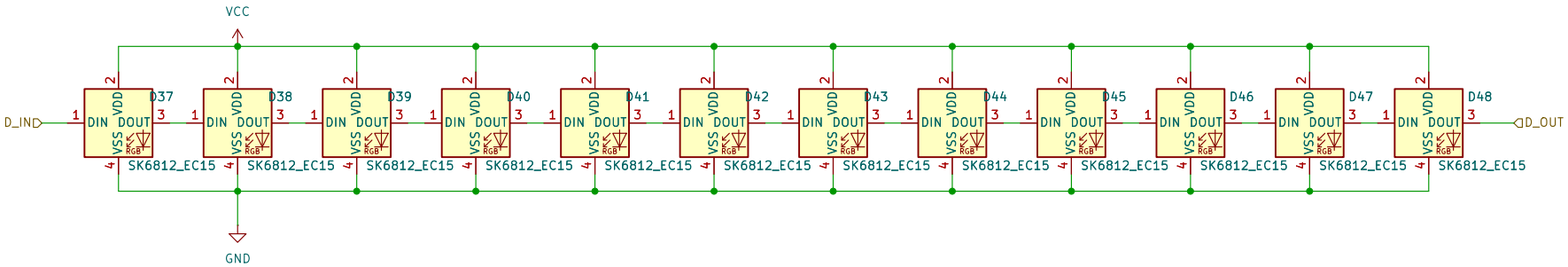

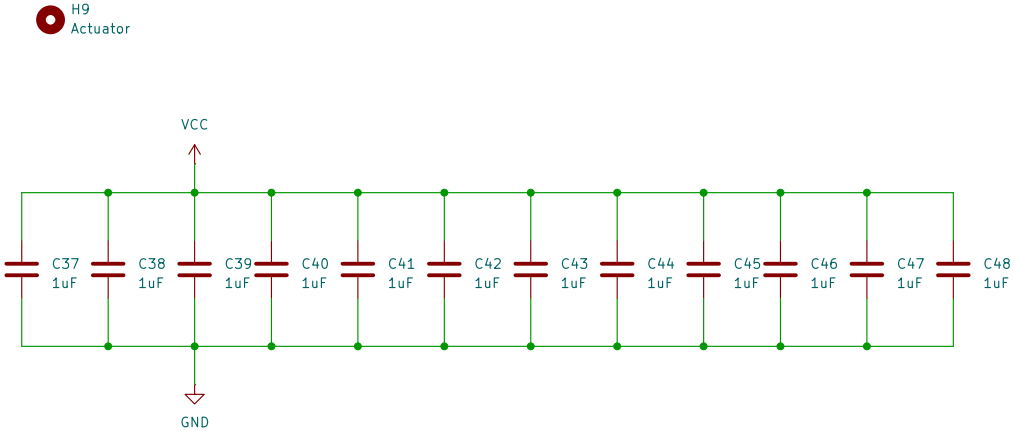

Git commit: 47610d8
License: CERN Open Hardware Licence Version 2 – Permissive
Source Code: https://github.com/pedalboard/pedalboard-display
https://github.com/pedalboard

Sheet: /Led Ring B/
File: led_ring.kicad_sch

Title: Pedalboard Display

Size: A4	Date: 2024-10-16	**Rev: 1.0.1-RC**
KiCad E.D.A. 10.0.1		Id: 5/9

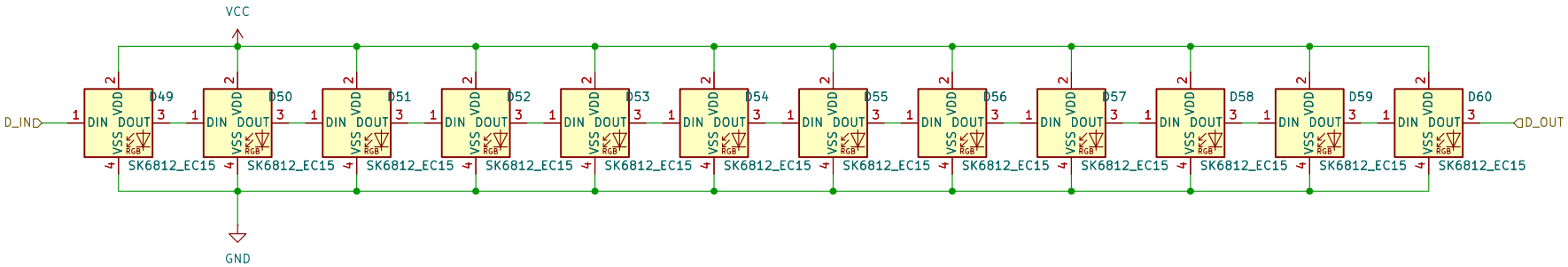

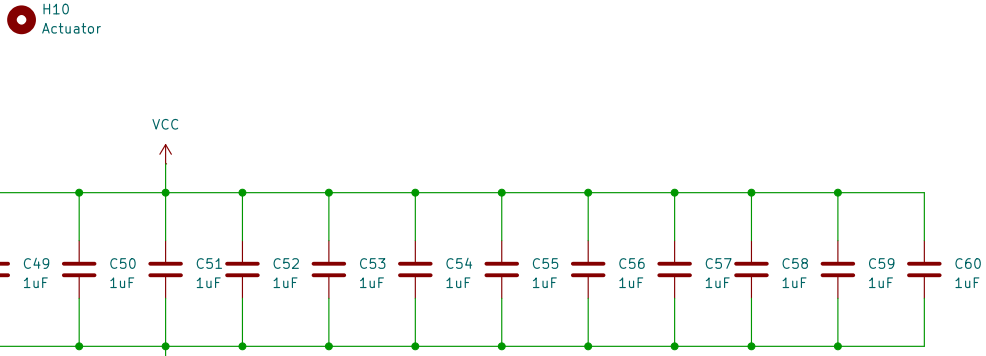

Git commit: 47610d8
License: CERN Open Hardware Licence Version 2 – Permissive
Source Code: https://github.com/pedalboard/pedalboard-display
https://github.com/pedalboard

Sheet: /Led Ring E/
File: led_ring.kicad_sch

Title: Pedalboard Display

Size: A4	Date: 2024-10-16	**Rev: 1.0.1-RC**
KiCad E.D.A. 10.0.1		Id: 6/9

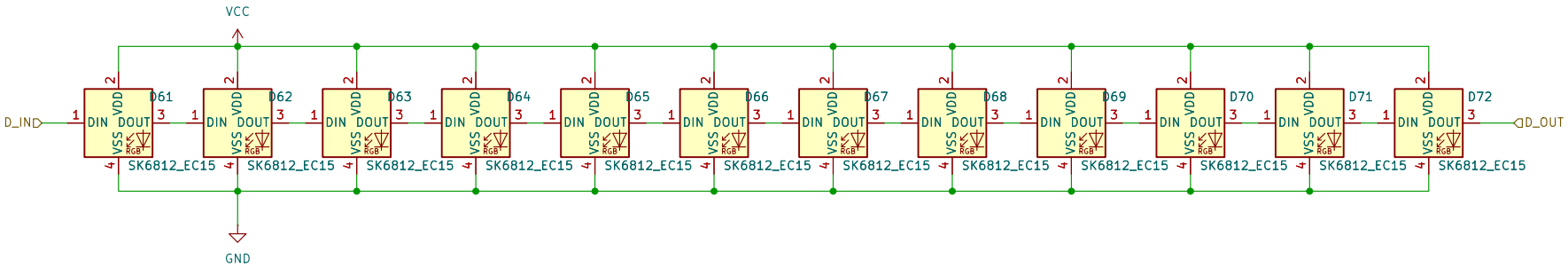

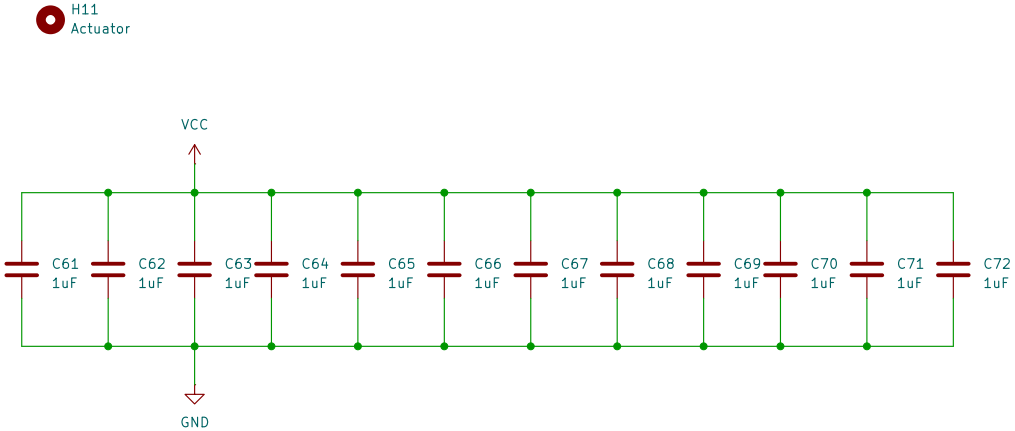

Git commit: 47610d8
License: CERN Open Hardware Licence Version 2 – Permissive
Source Code: https://github.com/pedalboard/pedalboard-display
https://github.com/pedalboard

Sheet: /Led Ring VOL/
File: led_ring.kicad_sch

Title: Pedalboard Display

Size: A4	Date: 2024-10-16	**Rev: 1.0.1-RC**
KiCad E.D.A. 10.0.1		Id: 7/9

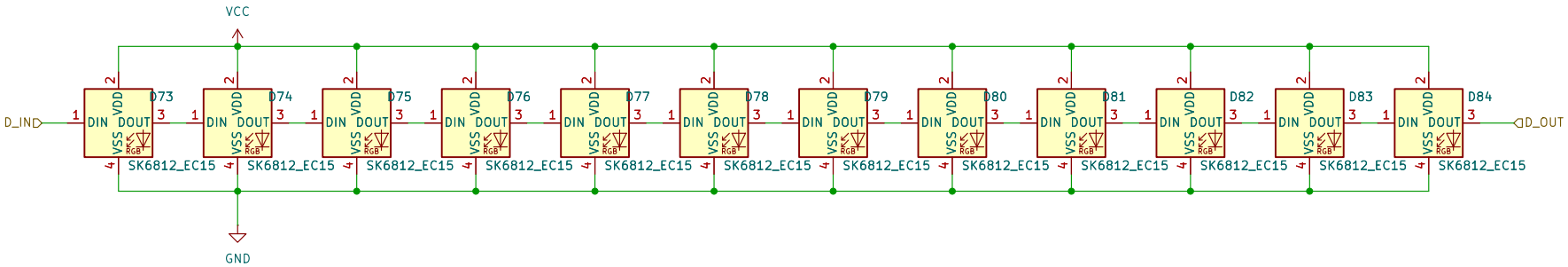

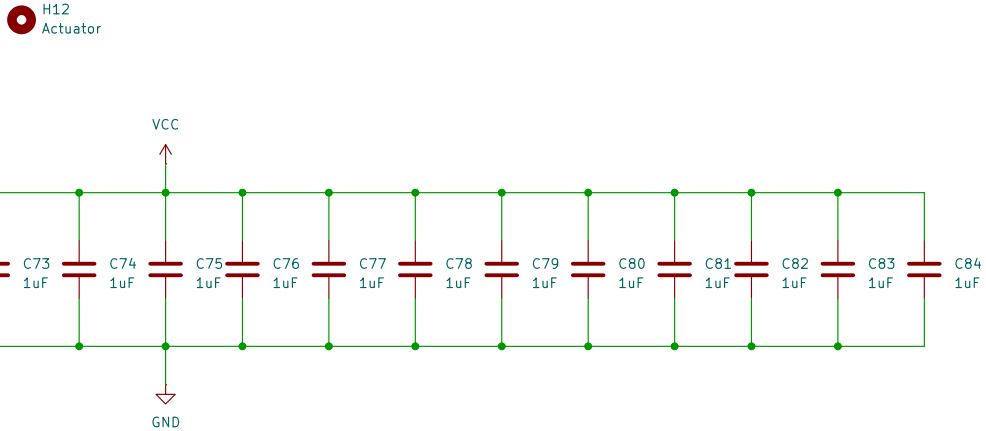

Git commit: 47610d8
License: CERN Open Hardware Licence Version 2 – Permissive
Source Code: https://github.com/pedalboard/pedalboard-display
https://github.com/pedalboard

Sheet: /Led Ring D/
File: led_ring.kicad_sch

Title: Pedalboard Display

Size: A4	Date: 2024-10-16	**Rev: 1.0.1-RC**
KiCad E.D.A. 10.0.1		Id: 8/9

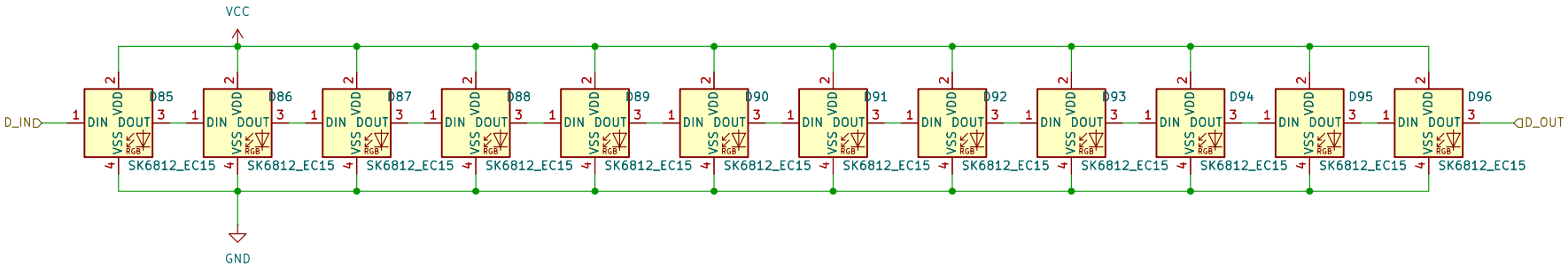

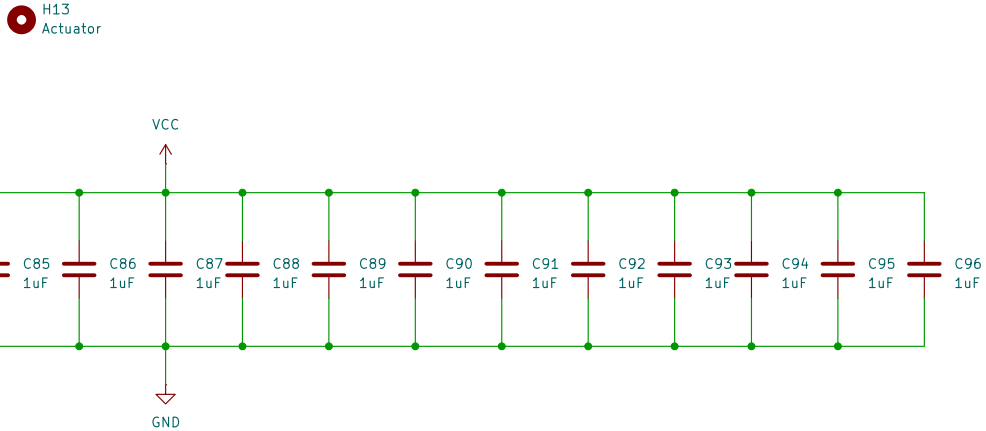

Git commit: 47610d8
License: CERN Open Hardware Licence Version 2 – Permissive
Source Code: https://github.com/pedalboard/pedalboard-display
https://github.com/pedalboard

Sheet: /Led Ring A/
File: led_ring.kicad_sch

Title: Pedalboard Display

Size: A4	Date: 2024-10-16	**Rev: 1.0.1-RC**
KiCad E.D.A. 10.0.1		Id: 9/9