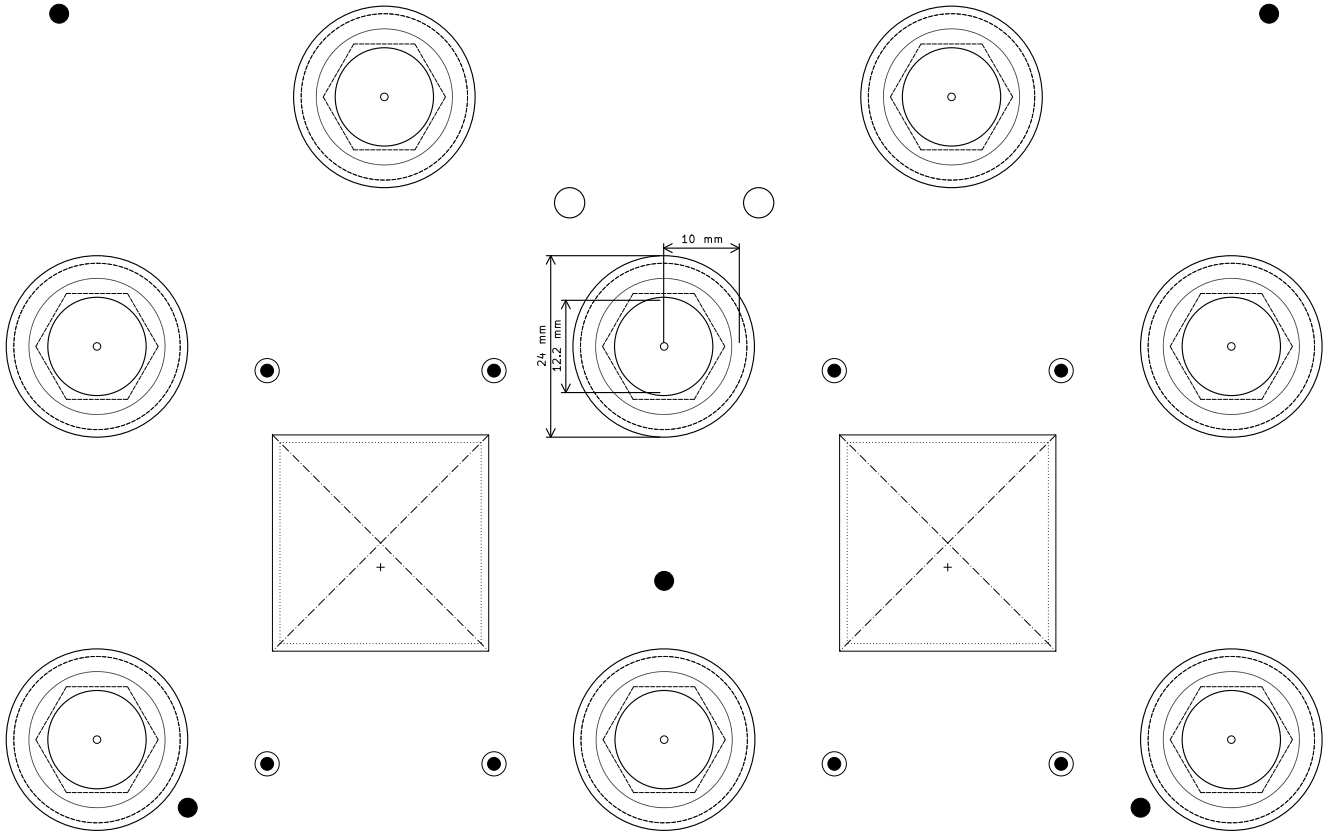
10 mm
24 mm
12.2 mm