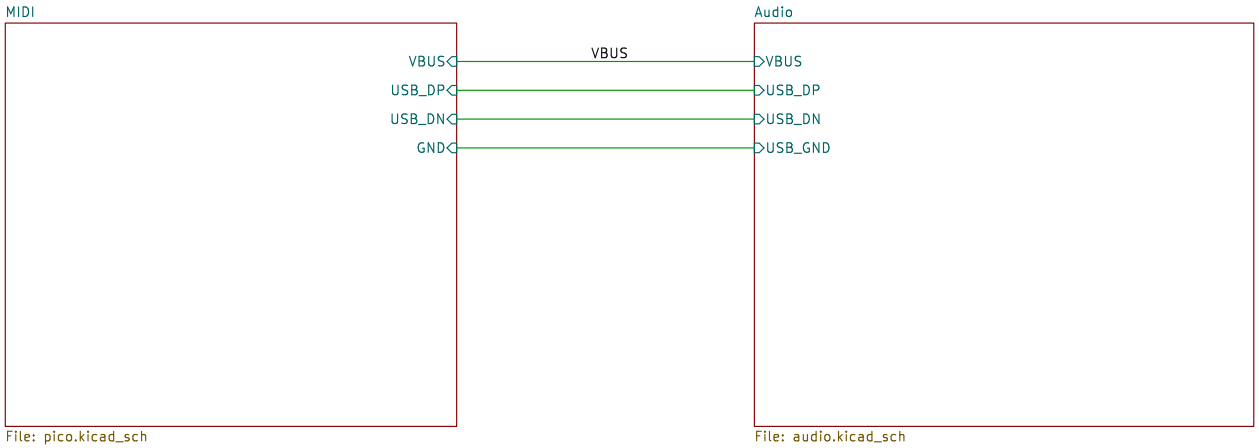

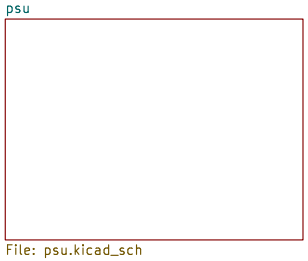

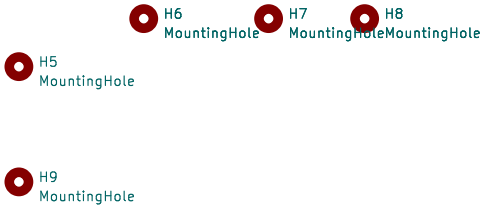

License: CERN Open Hardware Licence Version 2 – Permissive
Source Code: https://github.com/pedalboard/pedalboard-hw

Sheet: /
File: pedalboard-hw.kicad_sch

Title: Open Pedalboard

Size: A4	Date: 2023-03-12	**Rev: 0.0.1**
KiCad E.D.A. kicad-cli 7.0.1.1-36-gbcf78dbe24-dirty-deb11		Id: 1/4

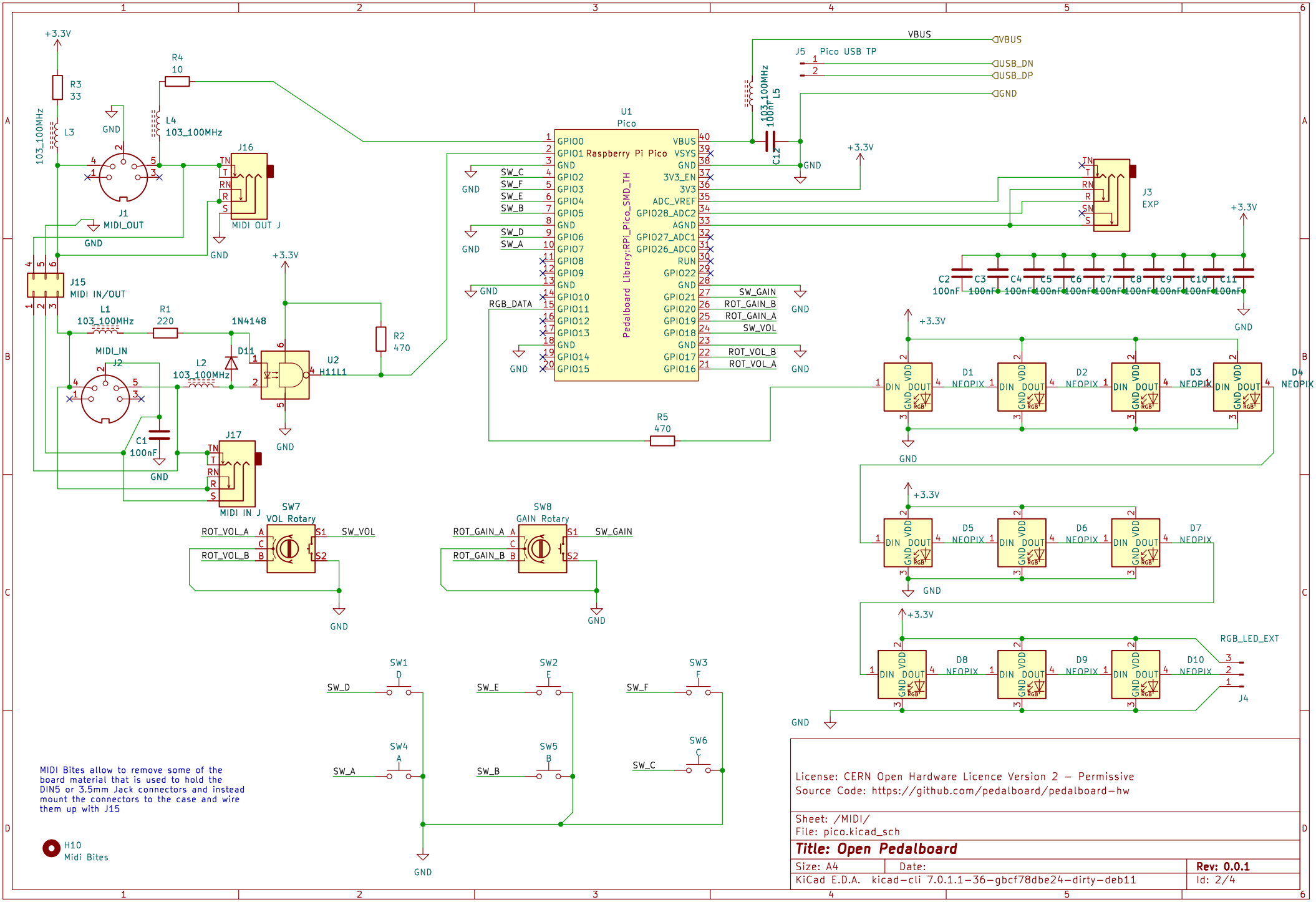
U1
Pico
Raspberry Pi Pico
Pedalboard Library:RPi_Pico_SMD_TH
GPIO0
GPIO1
GND
GPIO2
GPIO3
GPIO4
GPIO5
GPIO6
GPIO7
GPIO8
GPIO9
GPIO10
GPIO11
GPIO12
GPIO13
GPIO14
GPIO15
VBUS
VSYS
3V3_EN
3V3
ADC_VREF
GPIO28_ADC2
AGND
GPIO27_ADC1
GPIO26_ADC0
RUN
GPIO22
GPIO21
GPIO20
GPIO19
GPIO18
GPIO17
GPIO16
SW_C
SW_F
SW_E
SW_B
SW_D
SW_A
RGB_DATA
SW_GAIN
ROT_GAIN_B
ROT_GAIN_A
SW_VOL
ROT_VOL_B
ROT_VOL_A
J5 Pico USB TP
USB_DN
USB_DP
L5 103_100MHz
C12 100nF
J1 MIDI_OUT
J2 MIDI_IN
J15 MIDI IN/OUT
J16 MIDI OUT J
J17 MIDI IN J
J3 EXP
J4 RGB_LED_EXT
U2 H11L1
D11 1N4148
R1 220
R2 470
R3 33
R4 10
R5 470
L1 103_100MHz
L2 103_100MHz
L3 103_100MHz
L4 103_100MHz
C1 100nF
C2 100nF
C3 100nF
C4 100nF
C5 100nF
C6 100nF
C7 100nF
C8 100nF
C9 100nF
C10 100nF
C11 100nF
D1 NEOPIX
D2 NEOPIX
D3 NEOPIX
D4 NEOPIX
D5 NEOPIX
D6 NEOPIX
D7 NEOPIX
D8 NEOPIX
D9 NEOPIX
D10 NEOPIX
SW7 VOL Rotary
SW8 GAIN Rotary
SW1 D
SW2 E
SW3 F
SW4 A
SW5 B
SW6 C
+3.3V
GND
MIDI Bites allow to remove some of the board material that is used to hold the DIN5 or 3.5mm Jack connectors and instead mount the connectors to the case and wire them up with J15
H10
Midi Bites
License: CERN Open Hardware Licence Version 2 - Permissive
Source Code: https://github.com/pedalboard/pedalboard-hw
Sheet: /MIDI/
File: pico.kicad_sch
Title: Open Pedalboard
Size: A4
Date:
Rev: 0.0.1
KiCad E.D.A. kicad-cli 7.0.1.1-36-gbcf78dbe24-dirty-deb11
Id: 2/4

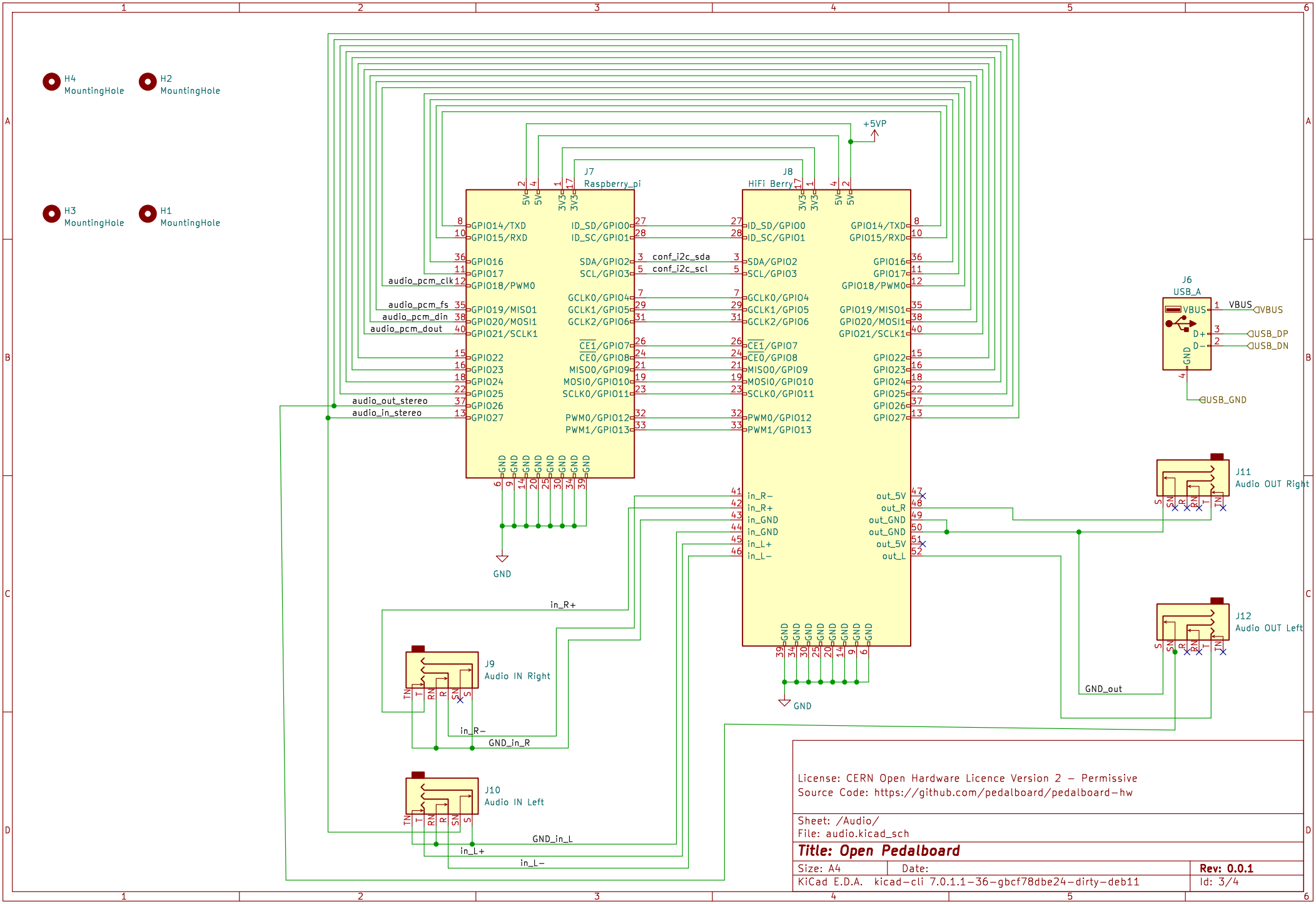

License: CERN Open Hardware Licence Version 2 – Permissive
Source Code: https://github.com/pedalboard/pedalboard-hw

Sheet: /Audio/
File: audio.kicad_sch

Title: Open Pedalboard

Size: A4	Date:	**Rev: 0.0.1**
KiCad E.D.A. kicad-cli 7.0.1.1-36-gbcf78dbe24-dirty-deb11		Id: 3/4

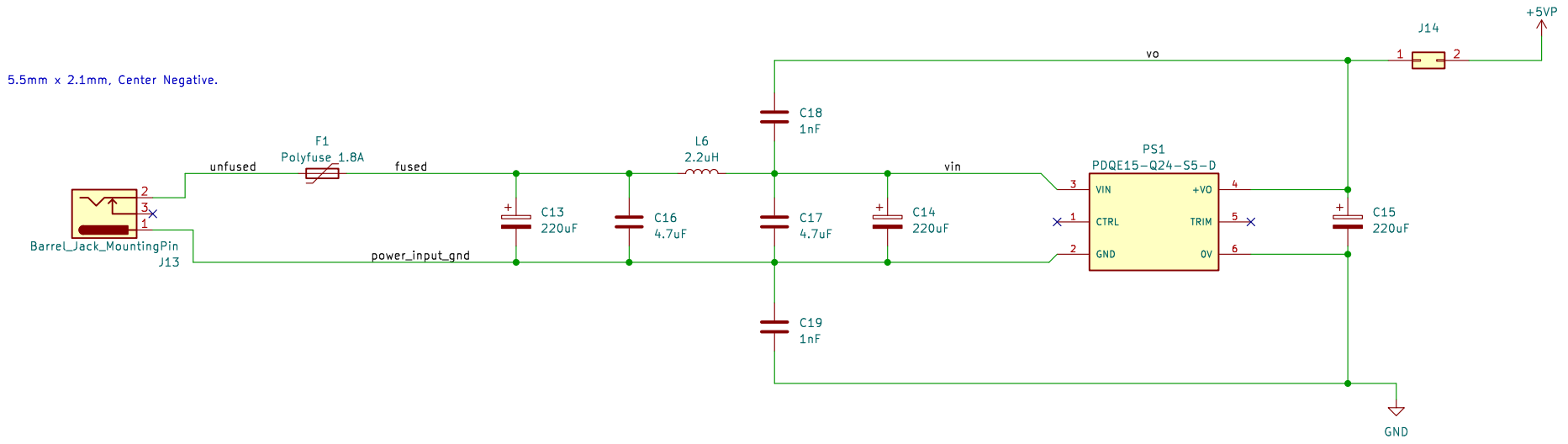

Sheet: /psu/
File: psu.kicad_sch

Title:

Size: A4	Date:	Rev:
KiCad E.D.A. kicad-cli 7.0.1.1-36-gbcf78dbe24-dirty-deb11		Id: 4/4