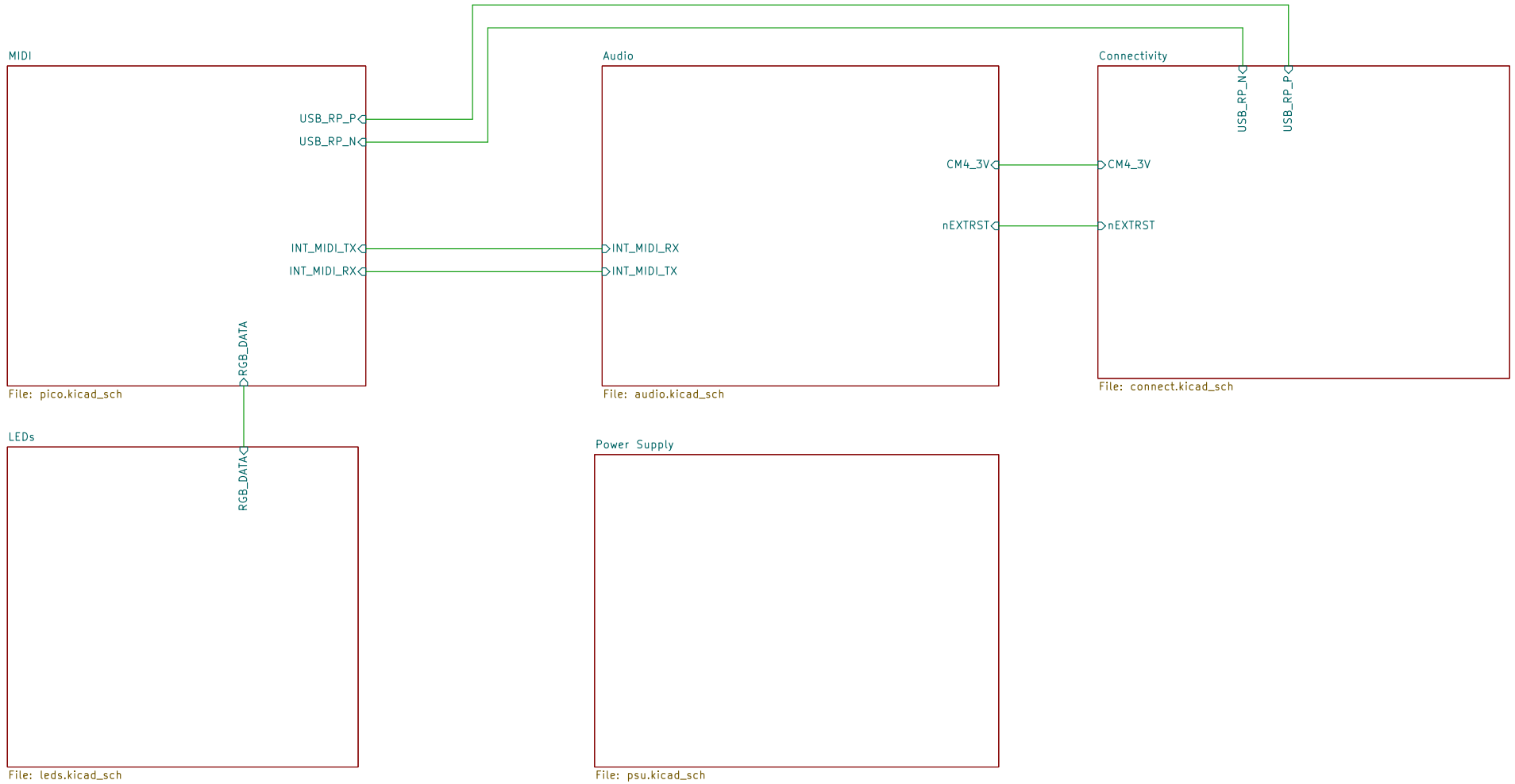

H1 MountingHole
H3 MountingHole
H16 MountingHole
H14 MountingHole
H15 MountingHole
FID1 Fiducial
FID4 Fiducial
FID2 Fiducial
FID3 Fiducial

Git commit hash: 795abf0
License: CERN Open Hardware Licence Version 2 – Permissive
Source Code: https://github.com/pedalboard/pedalboard-hw
https://github.com/pedalboard

Sheet: /
File: pedalboard-hw.kicad_sch

Title: Open Pedalboard Mainboard

Size: A4	Date: 2024-10-16	**Rev: 4.0.1-RC**
KiCad E.D.A. 10.0.1		Id: 1/6

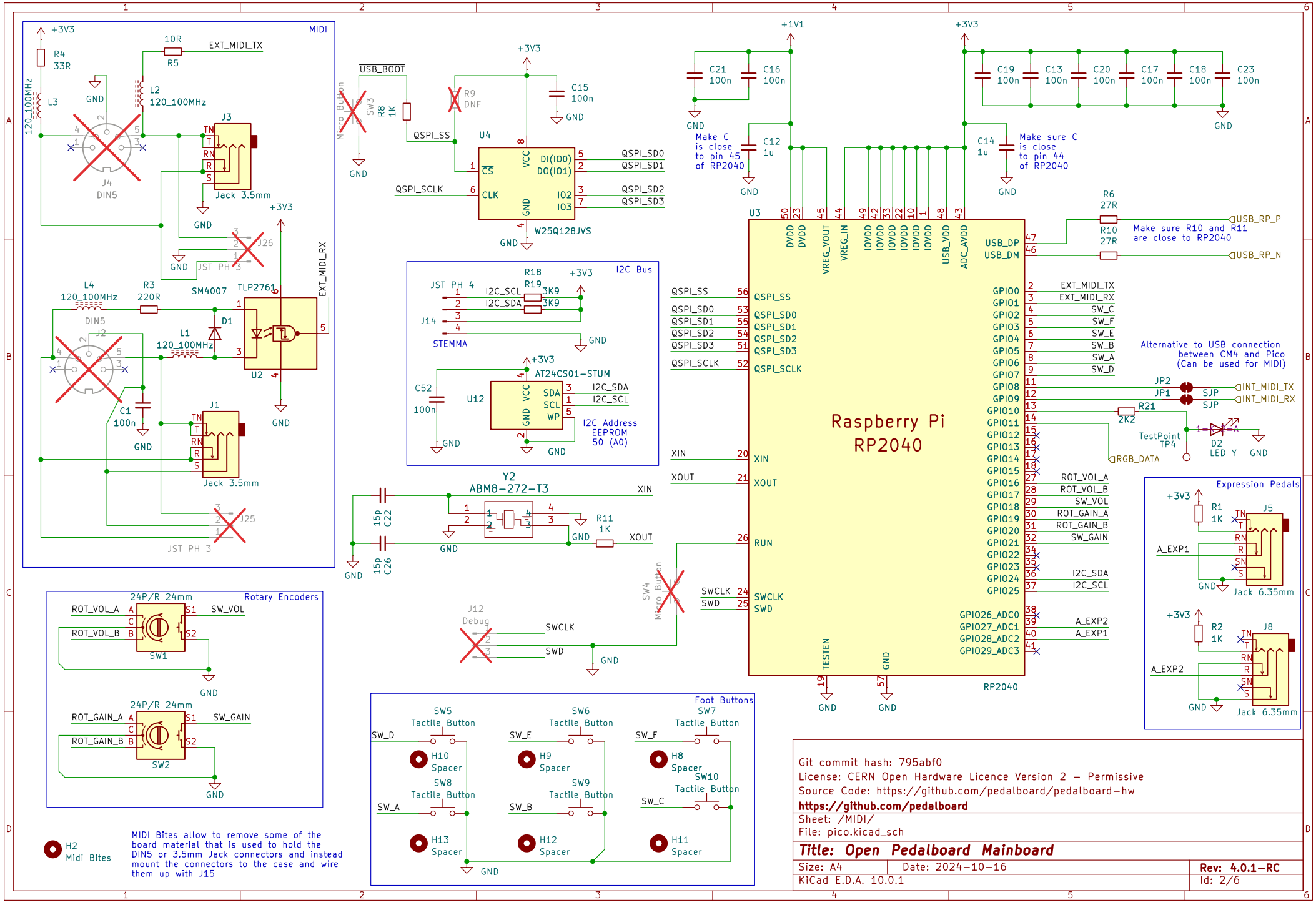

Git commit hash: 795abf0
License: CERN Open Hardware Licence Version 2 – Permissive
Source Code: https://github.com/pedalboard/pedalboard-hw
https://github.com/pedalboard
Sheet: /MIDI/
File: pico.kicad_sch

Title: Open Pedalboard Mainboard

Size: A4	Date: 2024-10-16	**Rev: 4.0.1-RC**
KiCad E.D.A. 10.0.1		Id: 2/6

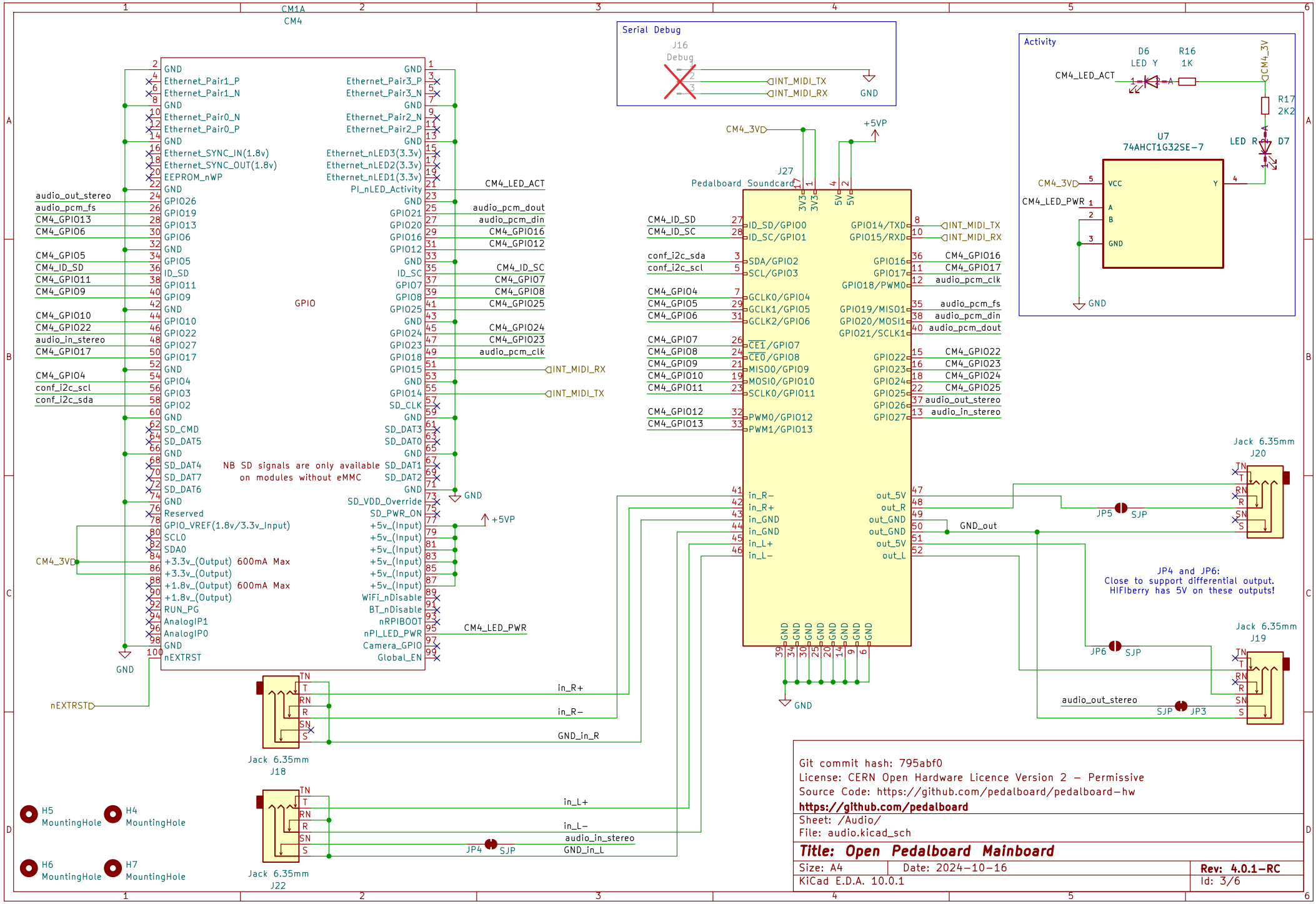
CM1A
CM4
GPIO
NB SD signals are only available on modules without eMMC
Serial Debug
J16
Debug
INT_MIDI_TX
INT_MIDI_RX
GND
Activity
D6
LED Y
R16
1K
CM4_LED_ACT
CM4_3V
R17
2K2
LED R
D7
U7
74AHCT1G32SE-7
VCC
CM4_LED_PWR
J27
Pedalboard Soundcard
+5VP
Jack 6.35mm
J20
Jack 6.35mm
J19
Jack 6.35mm
J18
Jack 6.35mm
J22
JP5
JP6
JP3
JP4
SJP
GND_out
audio_out_stereo
in_R+
in_R−
GND_in_R
in_L+
in_L−
audio_in_stereo
GND_in_L
JP4 and JP6:
Close to support differential output.
HIFIberry has 5V on these outputs!
H5
MountingHole
H4
MountingHole
H6
MountingHole
H7
MountingHole
Git commit hash: 795abf0
License: CERN Open Hardware Licence Version 2 – Permissive
Source Code: https://github.com/pedalboard/pedalboard-hw
https://github.com/pedalboard
Sheet: /Audio/
File: audio.kicad_sch
Title: Open Pedalboard Mainboard
Size: A4
Date: 2024-10-16
Rev: 4.0.1-RC
KiCad E.D.A. 10.0.1
Id: 3/6

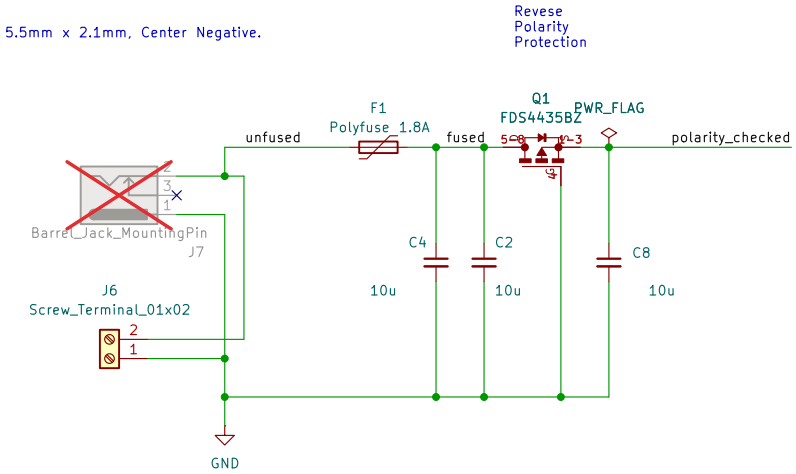

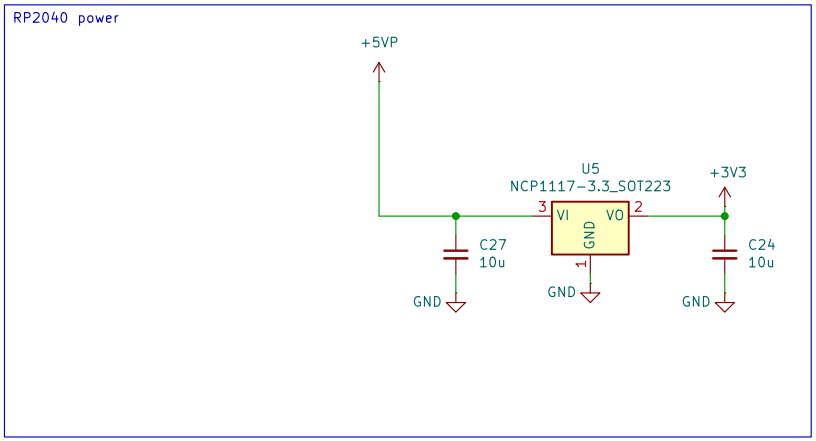

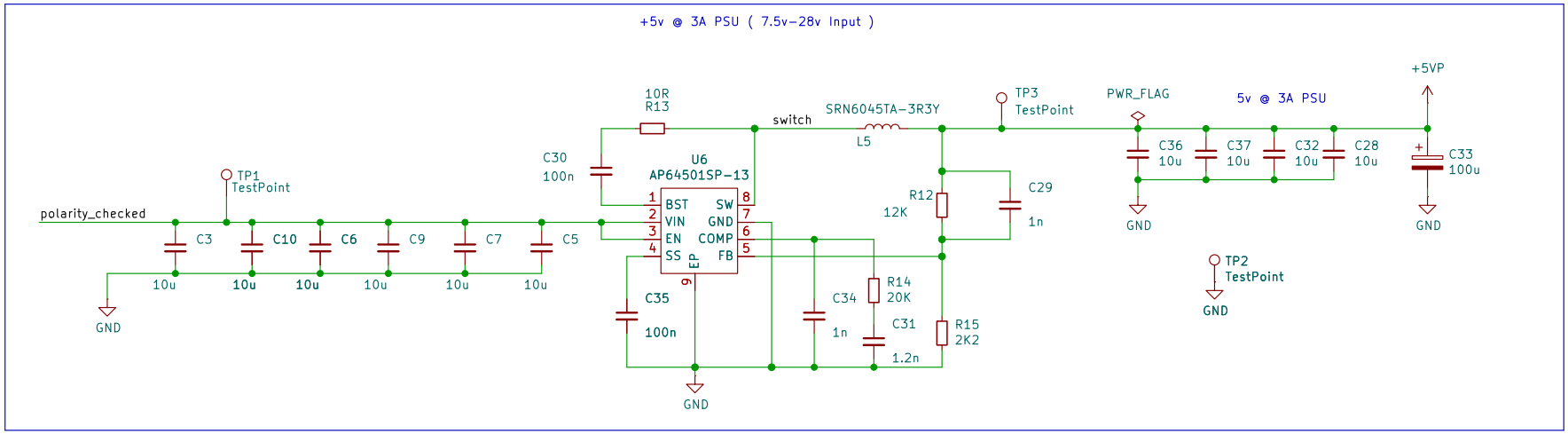

Git commit hash: 795abf0
License: CERN Open Hardware Licence Version 2 - Permissive
Source Code: https://github.com/pedalboard/pedalboard-hw
https://github.com/pedalboard

Sheet: /Power Supply/
File: psu.kicad_sch

Title: Open Pedalboard Mainboard

Size: A4	Date: 2024-10-16	**Rev: 4.0.1-RC**
KiCad E.D.A. 10.0.1		Id: 4/6

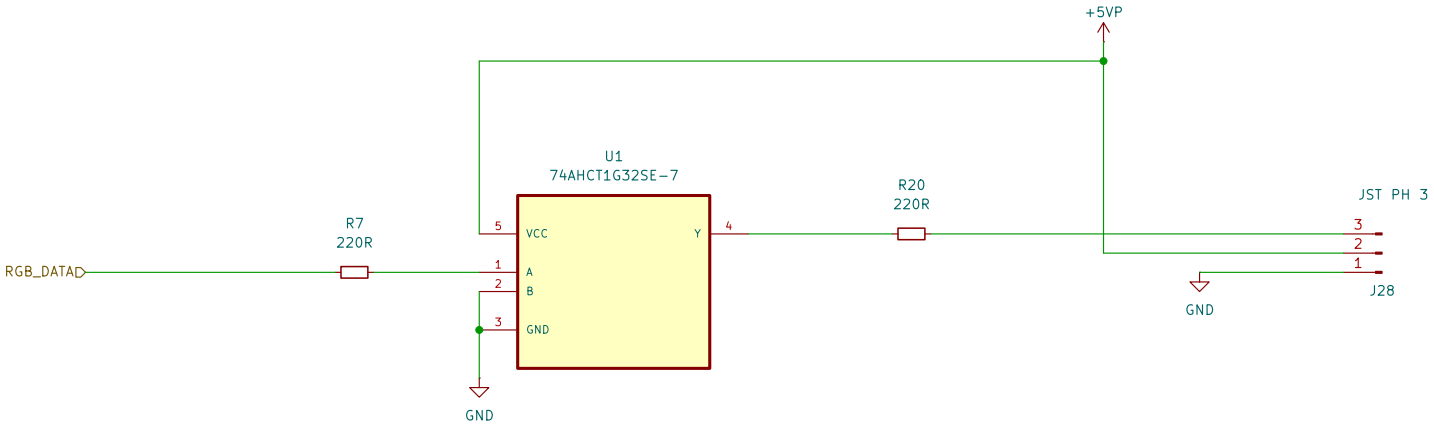

Git commit hash: 795abf0
License: CERN Open Hardware Licence Version 2 - Permissive
Source Code: https://github.com/pedalboard/pedalboard-hw
https://github.com/pedalboard

Sheet: /LEDs/
File: leds.kicad_sch

Title: Open Pedalboard Mainboard

Size: A4	Date: 2024-10-16	**Rev: 4.0.1-RC**
KiCad E.D.A. 10.0.1		Id: 5/6

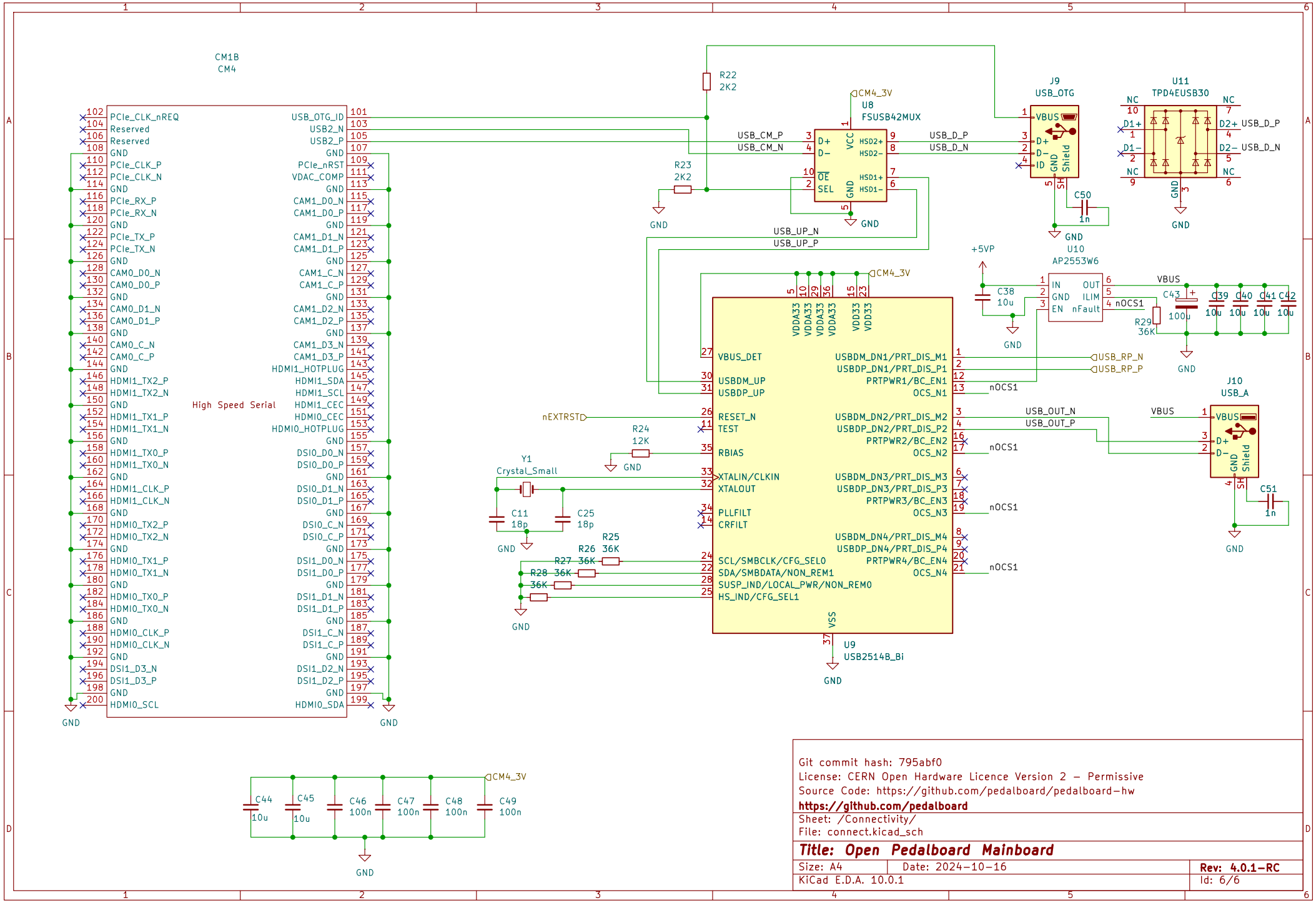

Git commit hash: 795abf0
License: CERN Open Hardware Licence Version 2 – Permissive
Source Code: https://github.com/pedalboard/pedalboard-hw
https://github.com/pedalboard

Sheet: /Connectivity/
File: connect.kicad_sch

Title: Open Pedalboard Mainboard

Size: A4	Date: 2024-10-16	**Rev: 4.0.1-RC**
KiCad E.D.A. 10.0.1		Id: 6/6