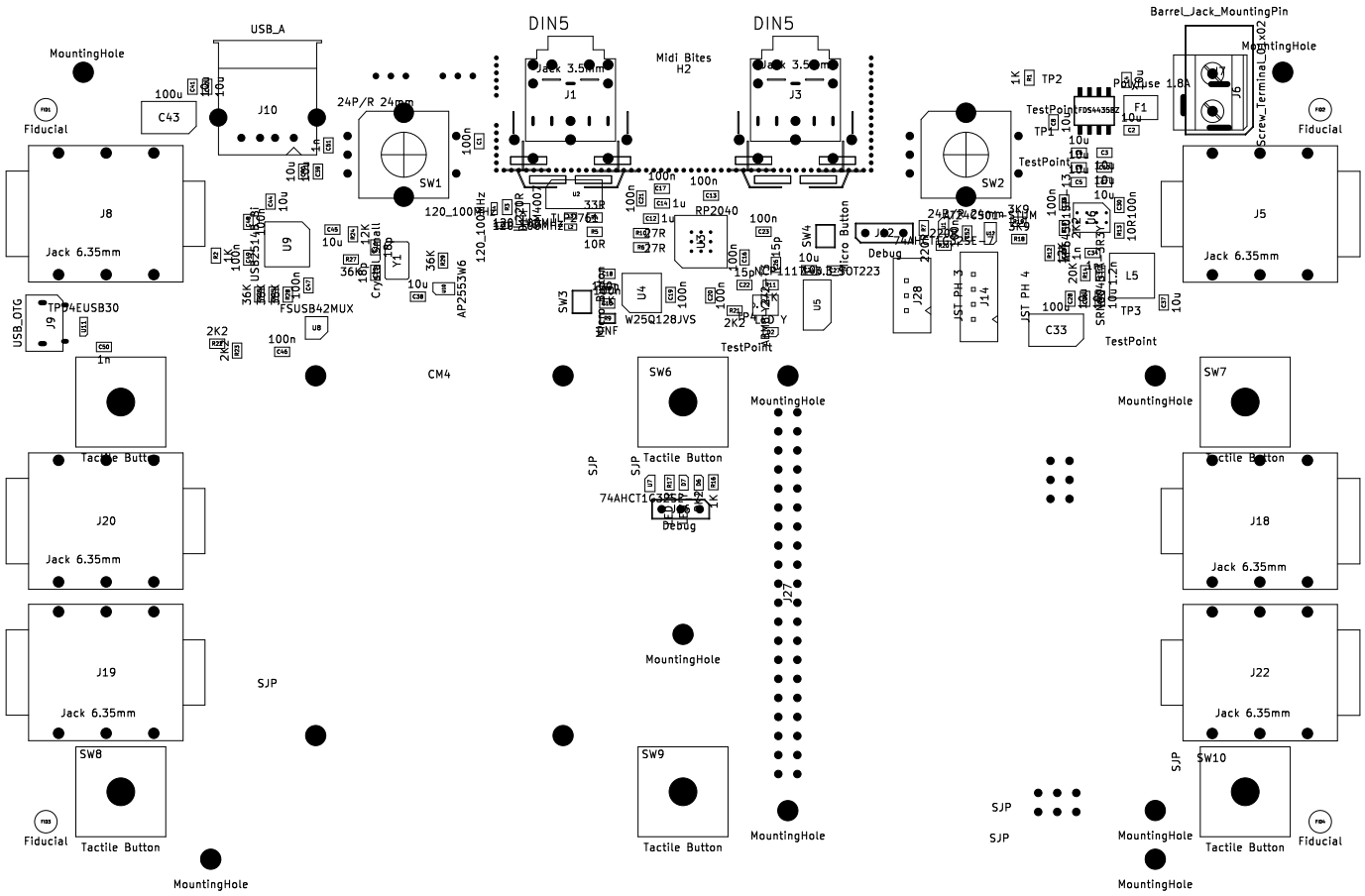
MountingHole
Fiducial
USB_A
J10
C43
100u
24P/R 24mm
SW1
DIN5
Jack 3.5mm
J1
Midi Bites
H2
J3
Barrel_Jack_MountingPin
Screw_Terminal_1x02
J6
Polyfuse 1.8A
F1
TP1
TP2
TestPoint
J8
Jack 6.35mm
J5
U9
Y1
FSUSB42MUX
AP2553W6
USB_OTG
J9
TPD4EUSB30
CM4
SW2
SW3
SW4
Micro Button
U4
W25Q128JVS
RP2040
U5
J2
Debug
J28
JST PH 3
J14
JST PH 4
L5
TP3
C33
SW6
Tactile Button
SJP
74AHCT1G32GF
J27
J20
J18
J19
J22
SW7
SW8
SW9
SW10