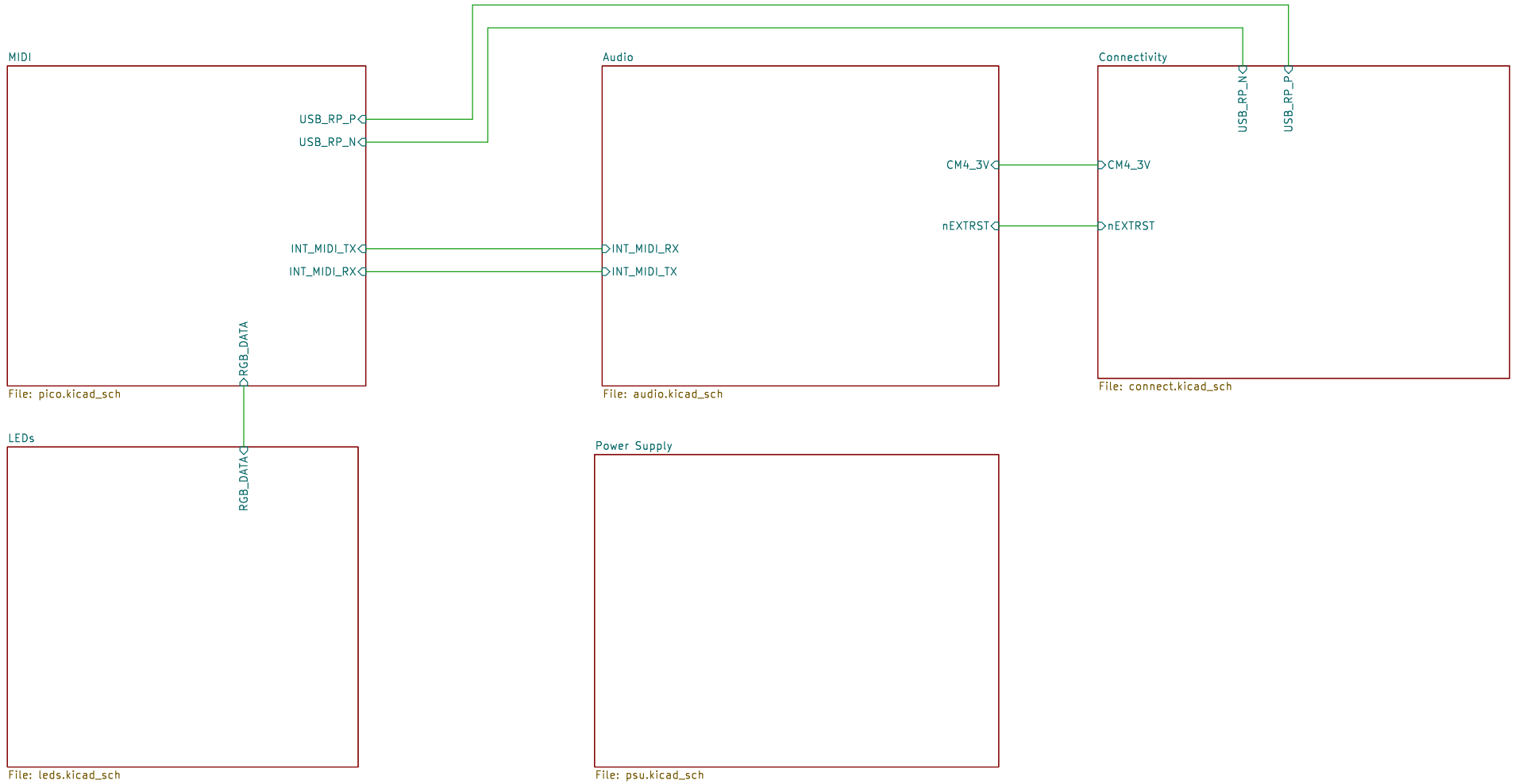

H1 MountingHole
H3 MountingHole
H16 MountingHole
H14 MountingHole
H15 MountingHole
FID1 Fiducial
FID4 Fiducial
FID2 Fiducial
FID3 Fiducial

Git commit hash: a2e1c03
License: CERN Open Hardware Licence Version 2 – Permissive
Source Code: https://github.com/pedalboard/pedalboard-hw
https://github.com/pedalboard

Sheet: /
File: pedalboard-hw.kicad_sch

Title: Open Pedalboard Mainboard

Size: A4	Date: 2024-10-16	**Rev: 4.0.1-RC**
KiCad E.D.A. 9.0.7		Id: 1/6

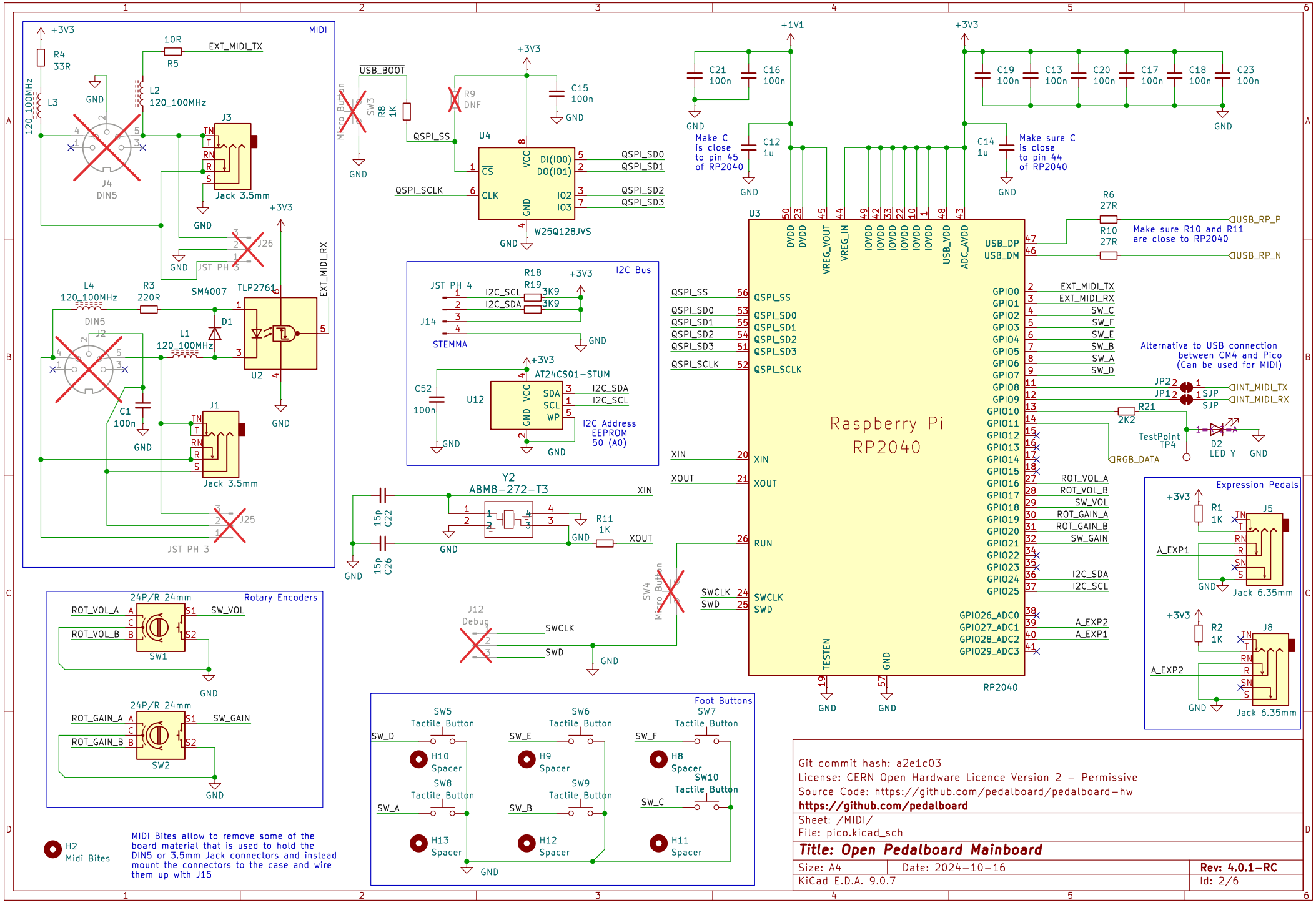
MIDI
+3V3
R4
33R
120_100MHz
L3
10R
R5
EXT_MIDI_TX
L2
120_100MHz
GND
J3
J4
DIN5
Jack 3.5mm
J26
JST PH 3
EXT_MIDI_RX
L4
120_100MHz
R3
220R
SM4007
TLP2761
D1
L1
120_100MHz
U2
J2
C1
100n
J1
Jack 3.5mm
J25
JST PH 3
USB_BOOT
Micro Button
SW3
R8
1K
QSPI_SS
R9
DNF
C15
100n
U4
VCC
CS
CLK
GND
DI(IO0)
DO(IO1)
IO2
IO3
QSPI_SD0
QSPI_SD1
QSPI_SD2
QSPI_SD3
QSPI_SCLK
W25Q128JVS
+1V1
C21
100n
C16
100n
C12
1u
Make C is close to pin 45 of RP2040
C19
100n
C13
100n
C20
100n
C17
100n
C18
100n
C23
100n
C14
1u
Make sure C is close to pin 44 of RP2040
U3
DVDD
VREG_VOUT
VREG_IN
IOVDD
USB_VDD
ADC_AVDD
USB_DP
USB_DM
R6
27R
R10
27R
Make sure R10 and R11 are close to RP2040
USB_RP_P
USB_RP_N
QSPI_SS
QSPI_SD0
QSPI_SD1
QSPI_SD2
QSPI_SD3
QSPI_SCLK
XIN
XOUT
RUN
SWCLK
SWD
TESTEN
GPIO0
GPIO1
GPIO2
GPIO3
GPIO4
GPIO5
GPIO6
GPIO7
GPIO8
GPIO9
GPIO10
GPIO11
GPIO12
GPIO13
GPIO14
GPIO15
GPIO16
GPIO17
GPIO18
GPIO19
GPIO20
GPIO21
GPIO22
GPIO23
GPIO24
GPIO25
GPIO26_ADC0
GPIO27_ADC1
GPIO28_ADC2
GPIO29_ADC3
EXT_MIDI_TX
EXT_MIDI_RX
SW_C
SW_F
SW_E
SW_B
SW_A
SW_D
ROT_VOL_A
ROT_VOL_B
SW_VOL
ROT_GAIN_A
ROT_GAIN_B
SW_GAIN
I2C_SDA
I2C_SCL
A_EXP2
A_EXP1
Raspberry Pi
RP2040
Alternative to USB connection between CM4 and Pico (Can be used for MIDI)
JP2
JP1
SJP
INT_MIDI_TX
INT_MIDI_RX
R21
2K2
RGB_DATA
TestPoint
TP4
D2
LED Y
I2C Bus
R18
R19
3K9
I2C_SCL
I2C_SDA
J14
STEMMA
AT24CS01-STUM
U12
C52
100n
I2C Address
EEPROM
50 (A0)
Y2
ABM8-272-T3
15p
C22
15p
C26
R11
1K
J12
Debug
SW4
Micro Button
Expression Pedals
R1
1K
J5
Jack 6.35mm
R2
1K
J8
Jack 6.35mm
Rotary Encoders
24P/R 24mm
ROT_VOL_A
ROT_VOL_B
SW_VOL
SW1
ROT_GAIN_A
ROT_GAIN_B
SW_GAIN
SW2
Foot Buttons
SW5
SW6
SW7
SW8
SW9
SW10
Tactile Button
H10
H9
H8
H13
H12
H11
Spacer
H2
Midi Bites
MIDI Bites allow to remove some of the board material that is used to hold the DIN5 or 3.5mm Jack connectors and instead mount the connectors to the case and wire them up with J15
Git commit hash: a2e1c03
License: CERN Open Hardware Licence Version 2 - Permissive
Source Code: https://github.com/pedalboard/pedalboard-hw
https://github.com/pedalboard
Sheet: /MIDI/
File: pico.kicad_sch
Title: Open Pedalboard Mainboard
Size: A4
Date: 2024-10-16
Rev: 4.0.1-RC
KiCad E.D.A. 9.0.7
Id: 2/6

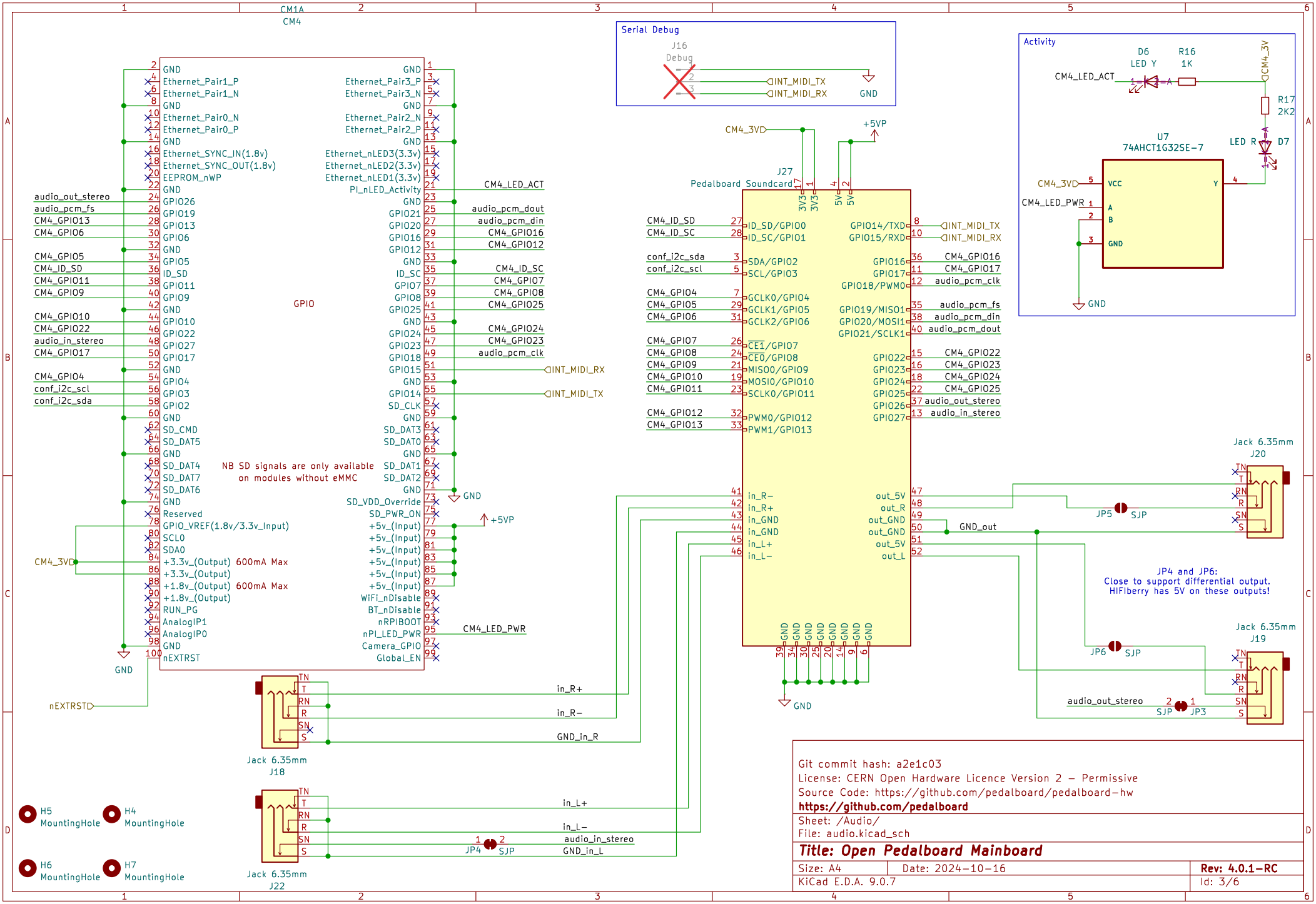
CM1A
CM4
GPIO
NB SD signals are only available on modules without eMMC
Serial Debug
J16
Debug
INT_MIDI_TX
INT_MIDI_RX
GND
Activity
D6
LED Y
R16
1K
CM4_LED_ACT
CM4_3V
R17
2K2
LED R
D7
U7
74AHCT1G32SE-7
VCC
CM4_LED_PWR
J27
Pedalboard Soundcard
+5VP
Jack 6.35mm
J20
Jack 6.35mm
J19
Jack 6.35mm
J18
Jack 6.35mm
J22
JP5
JP6
JP3
JP4
SJP
GND_out
audio_out_stereo
audio_in_stereo
JP4 and JP6:
Close to support differential output.
HIFIberry has 5V on these outputs!
in_R+
in_R−
GND_in_R
in_L+
in_L−
GND_in_L
nEXTRST
H5
MountingHole
H4
MountingHole
H6
MountingHole
H7
MountingHole
Git commit hash: a2e1c03
License: CERN Open Hardware Licence Version 2 – Permissive
Source Code: https://github.com/pedalboard/pedalboard-hw
https://github.com/pedalboard
Sheet: /Audio/
File: audio.kicad_sch
Title: Open Pedalboard Mainboard
Size: A4
Date: 2024-10-16
Rev: 4.0.1-RC
KiCad E.D.A. 9.0.7
Id: 3/6

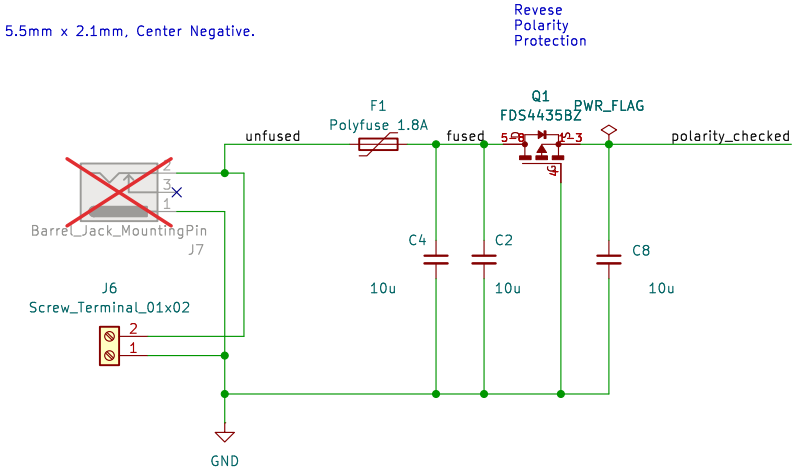

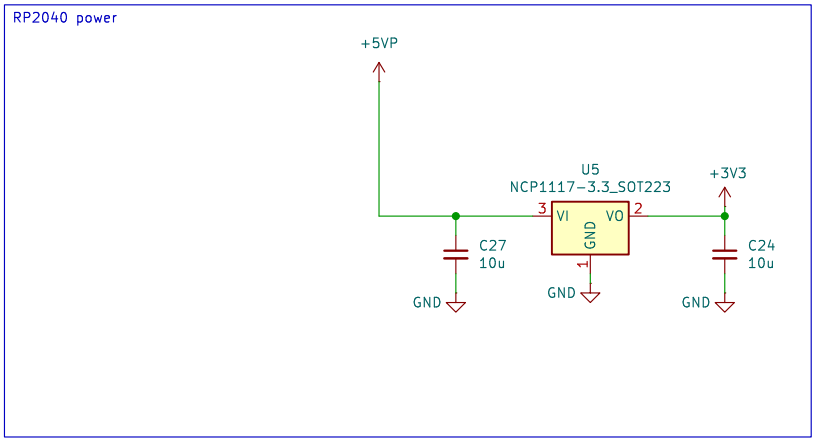

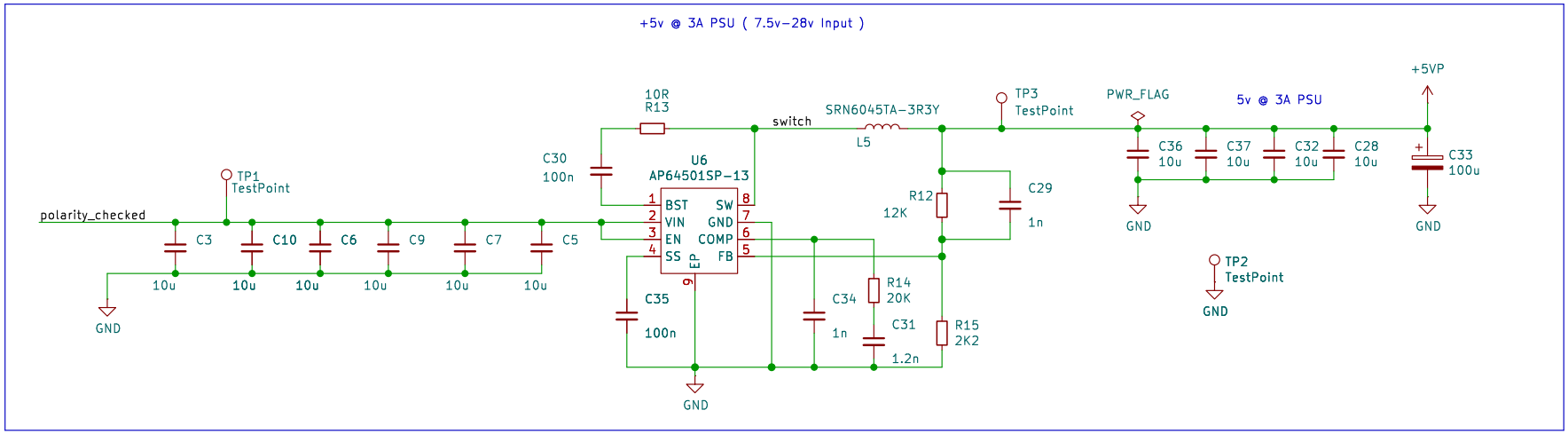

Git commit hash: a2e1c03
License: CERN Open Hardware Licence Version 2 - Permissive
Source Code: https://github.com/pedalboard/pedalboard-hw
https://github.com/pedalboard

Sheet: /Power Supply/
File: psu.kicad_sch

Title: Open Pedalboard Mainboard

Size: A4	Date: 2024-10-16	**Rev: 4.0.1-RC**
KiCad E.D.A. 9.0.7		Id: 4/6

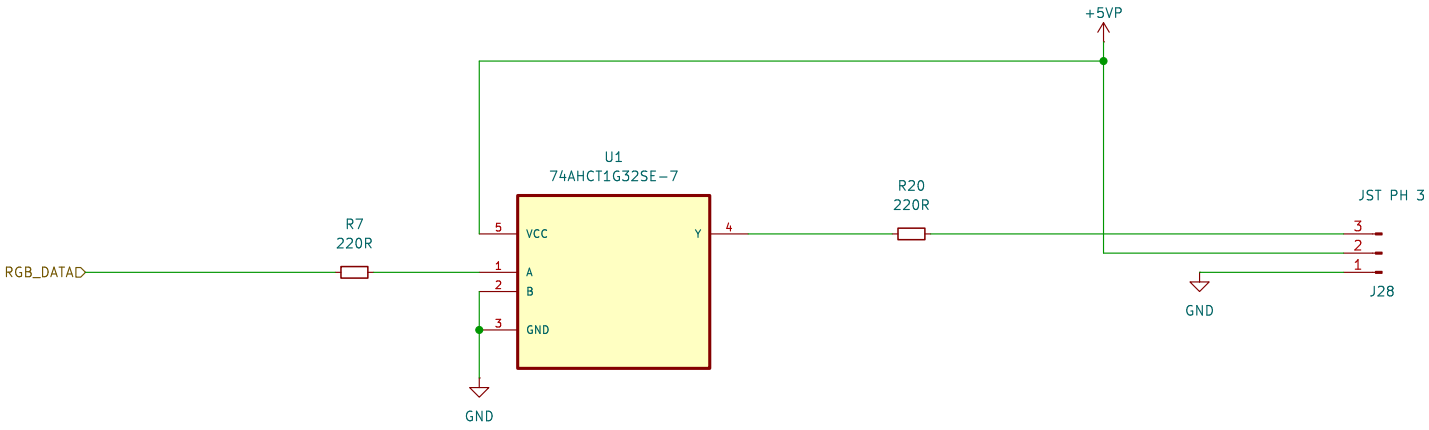

Git commit hash: a2e1c03
License: CERN Open Hardware Licence Version 2 - Permissive
Source Code: https://github.com/pedalboard/pedalboard-hw
https://github.com/pedalboard

Sheet: /LEDs/
File: leds.kicad_sch

Title: Open Pedalboard Mainboard

Size: A4	Date: 2024-10-16	**Rev: 4.0.1-RC**
KiCad E.D.A. 9.0.7		Id: 5/6

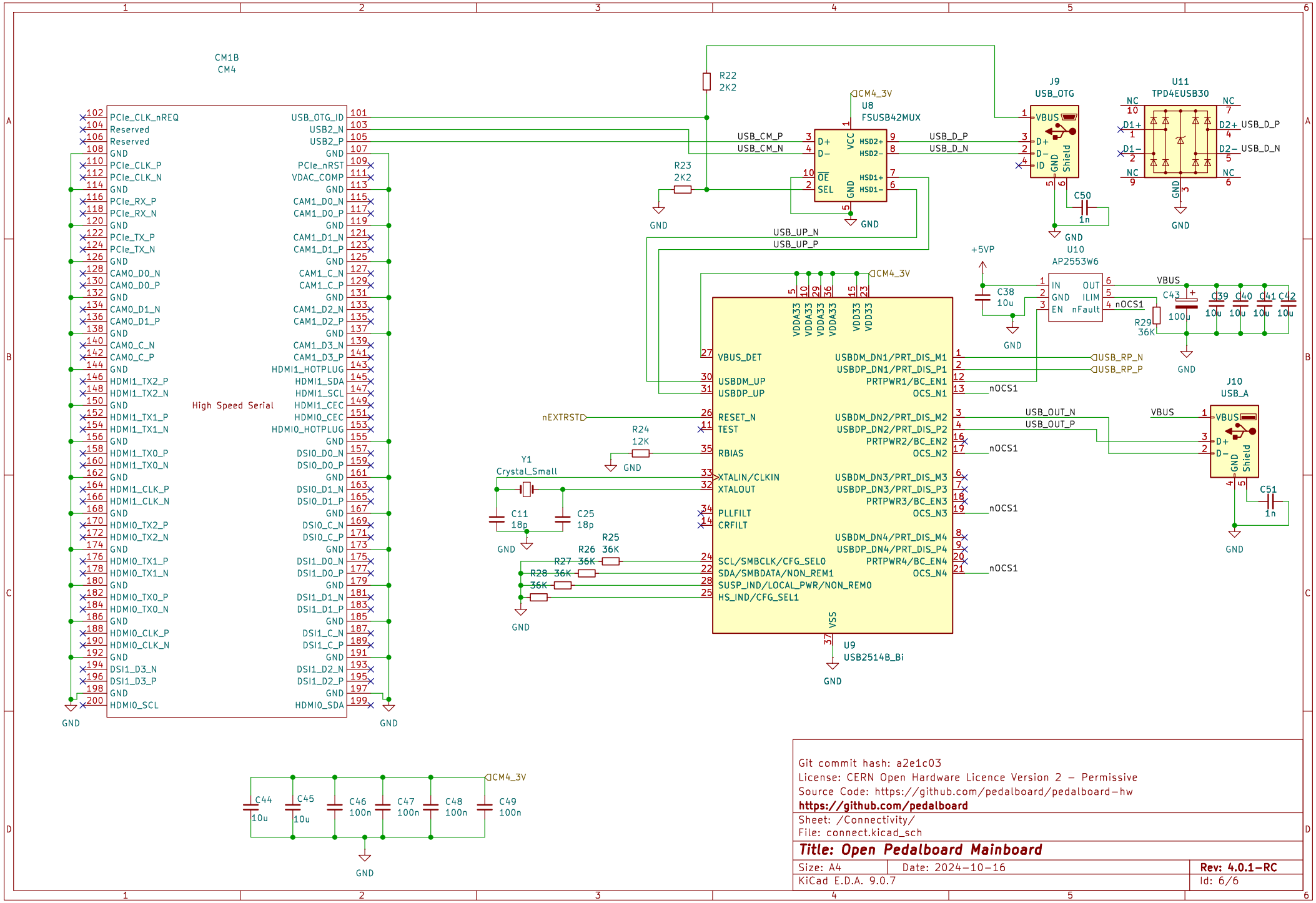

Git commit hash: a2e1c03
License: CERN Open Hardware Licence Version 2 – Permissive
Source Code: https://github.com/pedalboard/pedalboard-hw
https://github.com/pedalboard

Sheet: /Connectivity/
File: connect.kicad_sch

Title: Open Pedalboard Mainboard

Size: A4	Date: 2024-10-16	**Rev: 4.0.1-RC**
KiCad E.D.A. 9.0.7		Id: 6/6