/

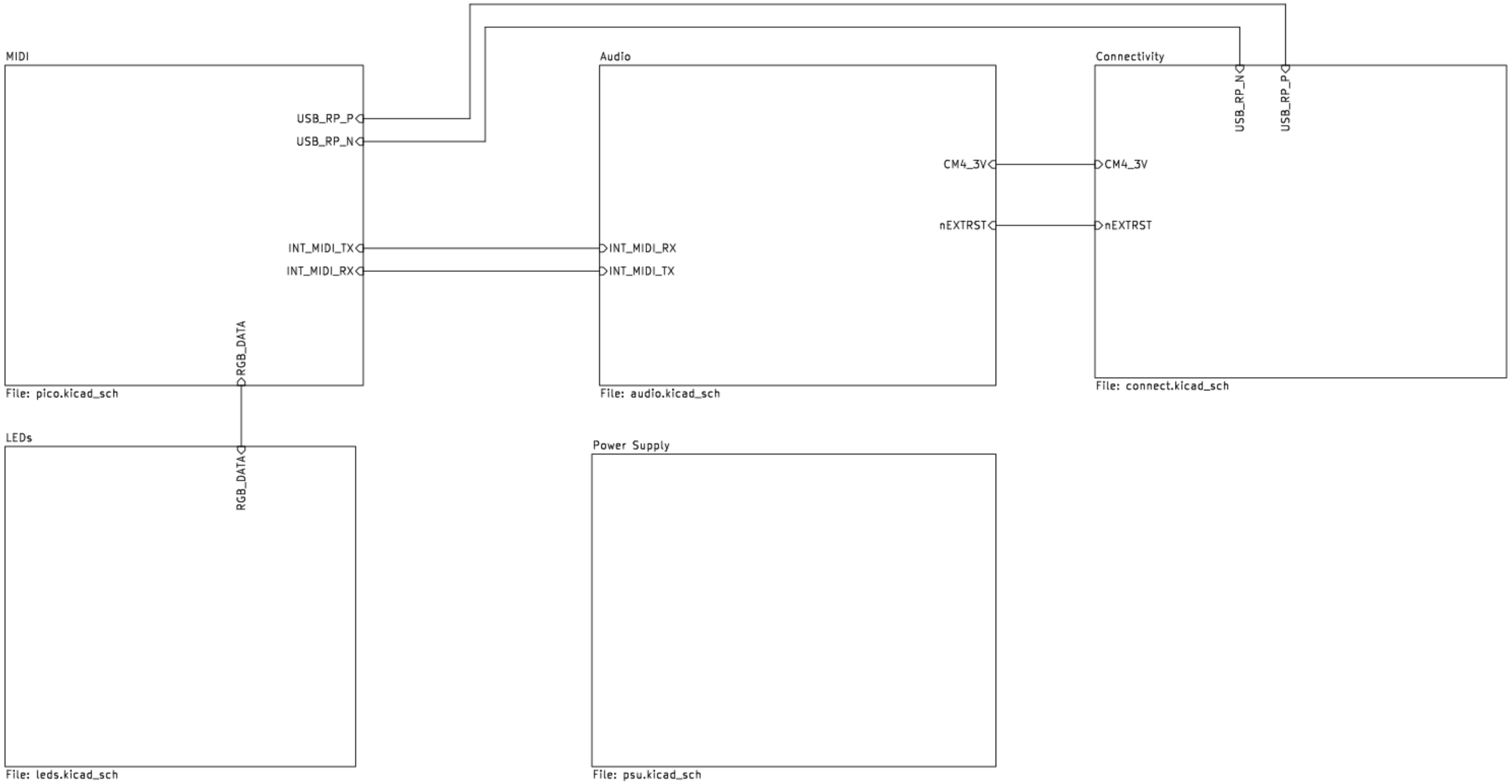
MIDI
USB_RP_P
USB_RP_N
INT_MIDI_TX
INT_MIDI_RX
RGB_DATA
File: pico.kicad_sch
Audio
CM4_3V
nEXTRST
INT_MIDI_RX
INT_MIDI_TX
File: audio.kicad_sch
Connectivity
USB_RP_N
USB_RP_P
CM4_3V
nEXTRST
File: connect.kicad_sch
LEDs
RGB_DATA
File: leds.kicad_sch
Power Supply
File: psu.kicad_sch

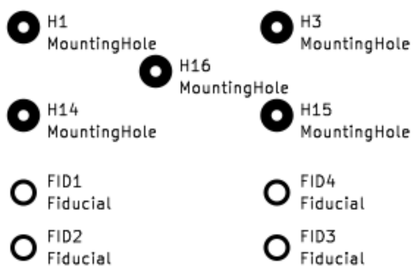
H1
MountingHole
H3
MountingHole
H16
MountingHole
H14
MountingHole
H15
MountingHole
FID1
Fiducial
FID4
Fiducial
FID2
Fiducial
FID3
Fiducial

# /Audio

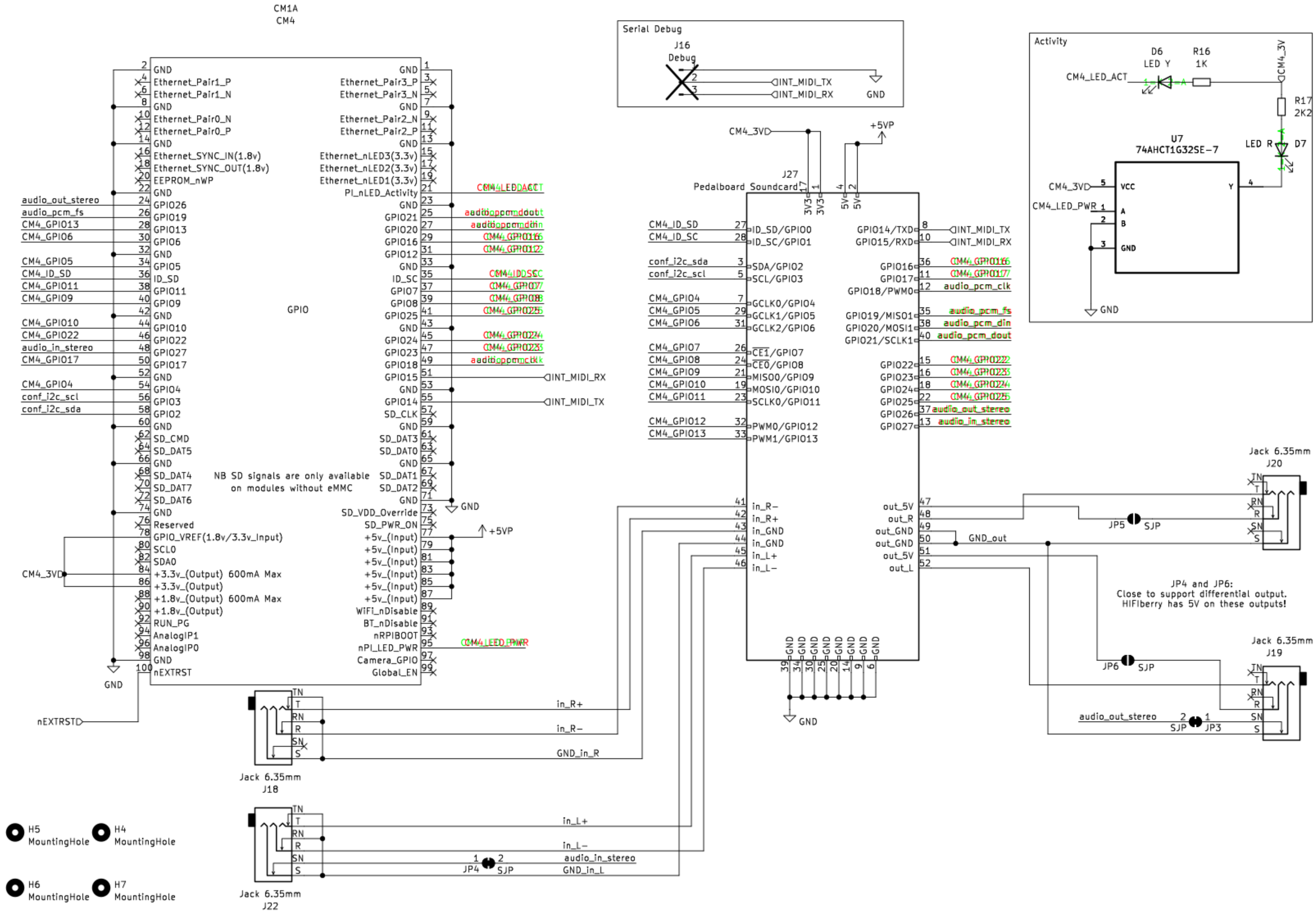
CM1A
CM4
GPIO
NB SD signals are only available on modules without eMMC
Serial Debug
J16
Debug
INT_MIDI_TX
INT_MIDI_RX
GND
CM4_3VD
+5VP
J27
Pedalboard Soundcard
Activity
D6
LED Y
R16
1K
CM4_LED_ACT
R17
2K2
U7
74AHCT1G32SE-7
LED R
D7
CM4_LED_PWR
Jack 6.35mm
J20
Jack 6.35mm
J19
Jack 6.35mm
J18
Jack 6.35mm
J22
JP5
SJP
JP6
JP3
JP4
GND_out
JP4 and JP6:
Close to support differential output.
HIFIberry has 5V on these outputs!
audio_out_stereo
audio_pcm_fs
audio_pcm_din
audio_pcm_dout
audio_pcm_clk
audio_in_stereo
in_R+
in_R−
GND_in_R
in_L+
in_L−
GND_in_L
nEXTRST
H5
MountingHole
H4
MountingHole
H6
MountingHole
H7
MountingHole

# /Connectivity

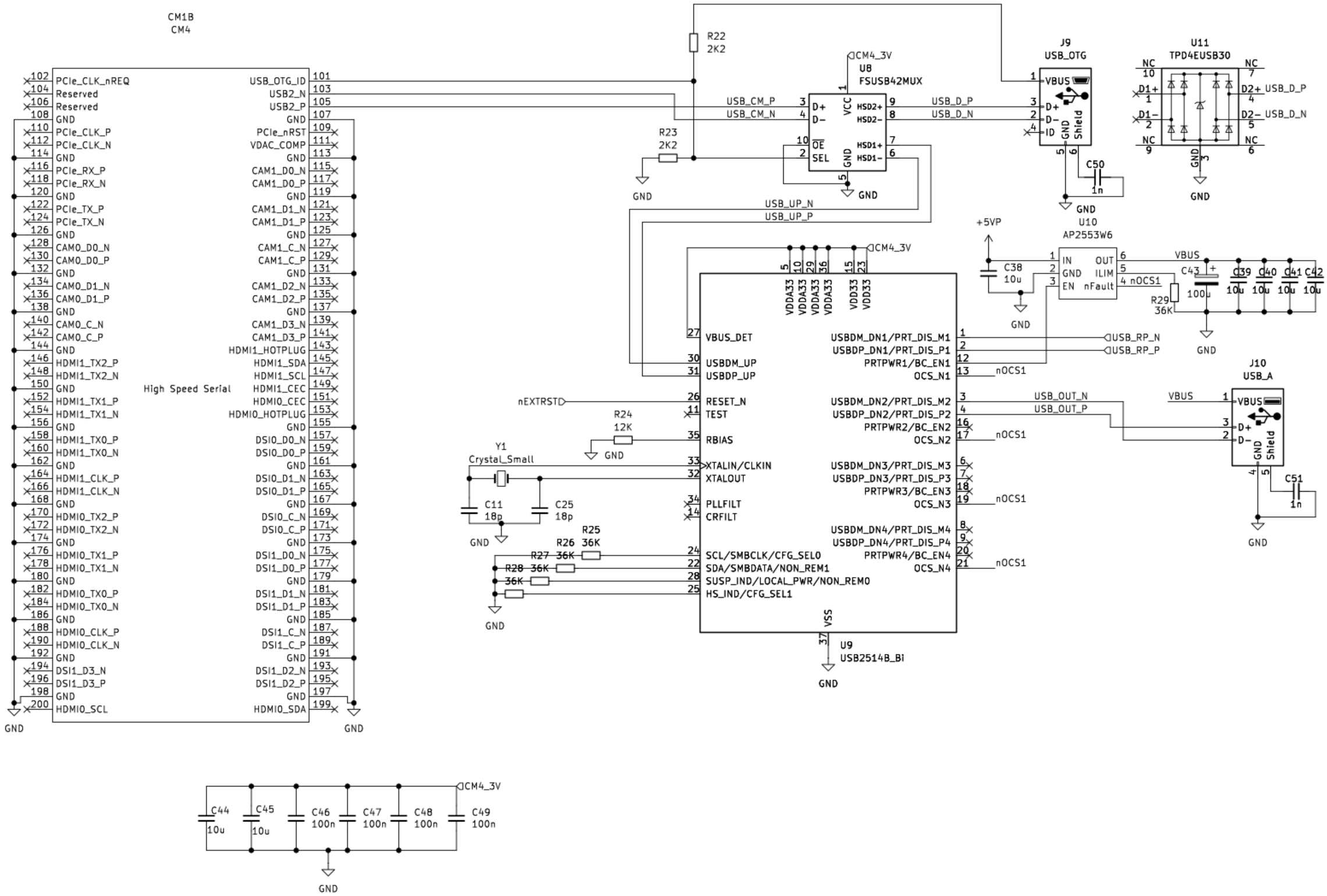

# /LEDs

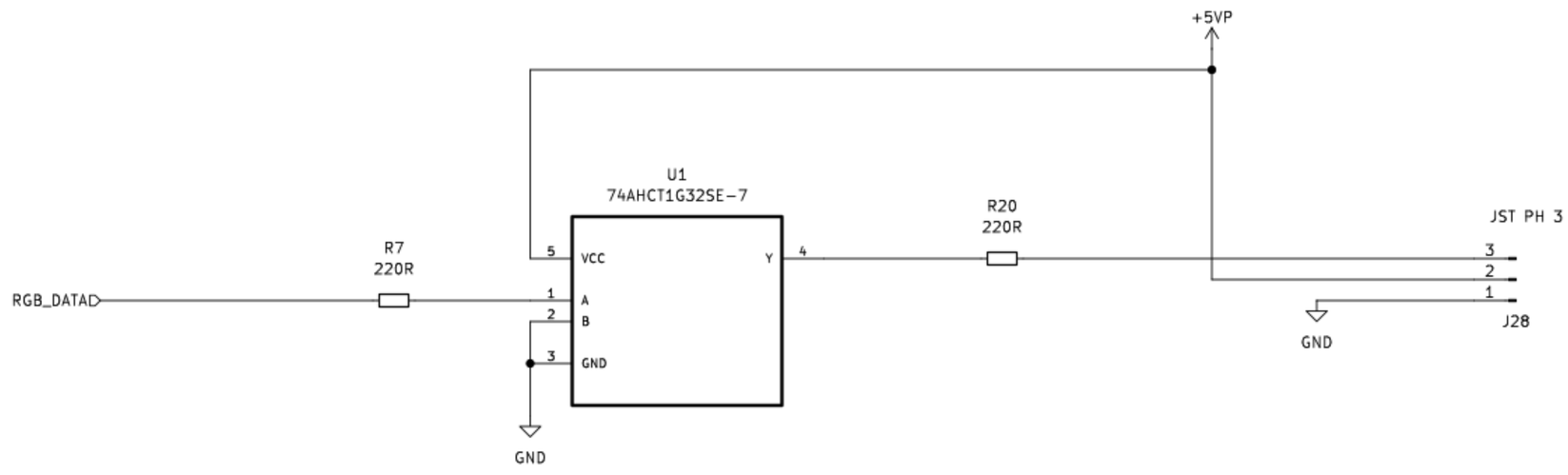
+5VP
U1
74AHCT1G32SE-7
R20
220R
JST PH 3
R7
220R
RGB_DATA
5
VCC
Y
4
1
A
2
B
3
GND
3
2
1
J28
GND
GND

# /MIDI

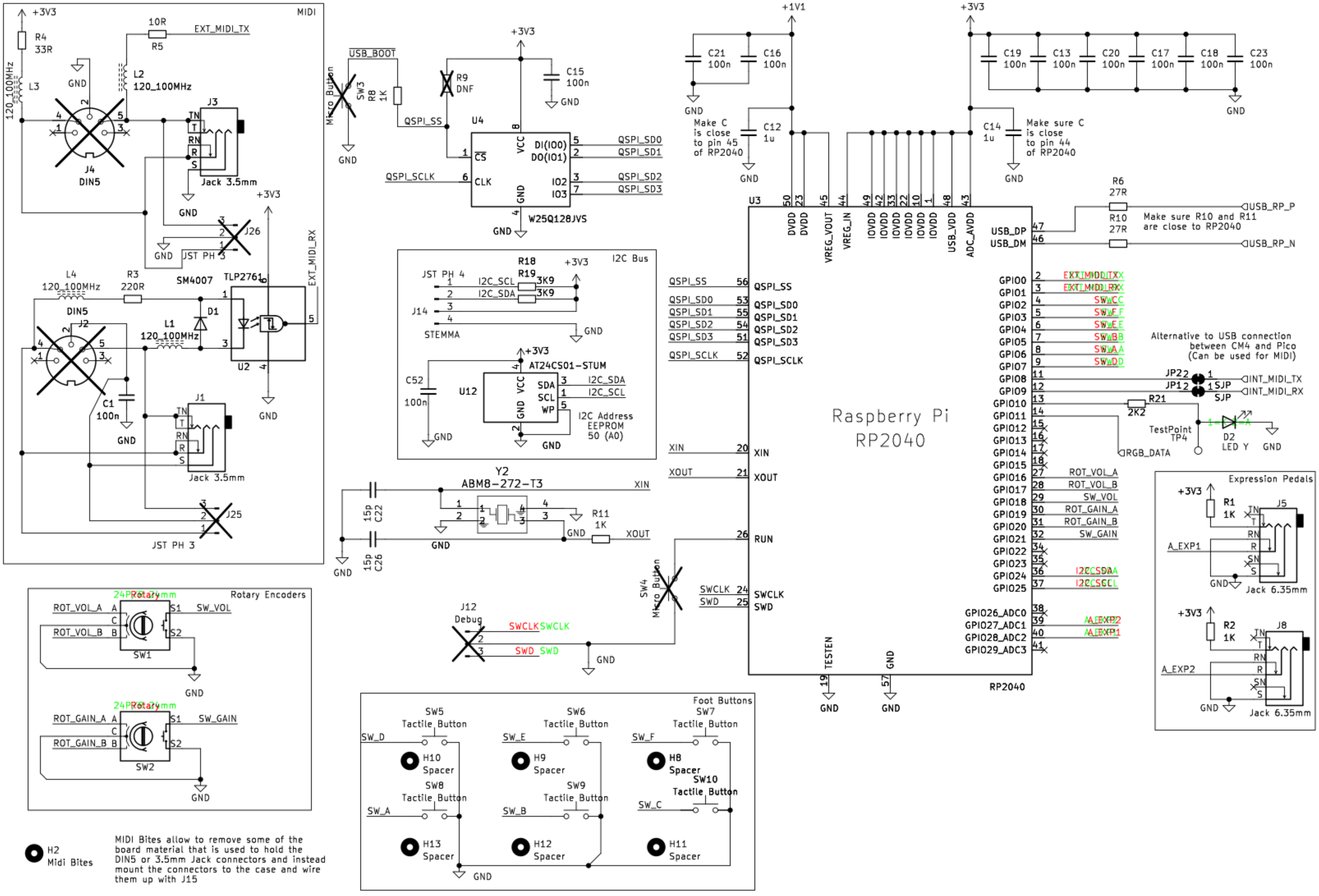
MIDI
+3V3
R4 33R
L3 120_100MHz
10R R5
EXT_MIDI_TX
L2 120_100MHz
J4 DIN5
J3 Jack 3.5mm
J26 JST PH 3
EXT_MIDI_RX
L4 120_100MHz
R3 220R
SM4007
TLP2761
D1
L1 120_100MHz
J2 DIN5
U2
C1 100n
J1 Jack 3.5mm
J25 JST PH 3
GND
USB_BOOT
Micro Button SW3
R8 1K
R9 DNF
C15 100n
QSPI_SS
QSPI_SCLK
U4
W25Q128JVS
QSPI_SD0
QSPI_SD1
QSPI_SD2
QSPI_SD3
I2C Bus
JST PH 4
I2C_SCL
I2C_SDA
R18 3K9
R19 3K9
J14 STEMMA
AT24CS01-STUM
C52 100n
U12
I2C Address EEPROM 50 (A0)
Y2 ABM8-272-T3
XIN
XOUT
R11 1K
15p C22
15p C26
J12 Debug
SWCLK
SWD
SW4 Micro Button
C21 100n
C16 100n
C12 1u
Make C is close to pin 45 of RP2040
+1V1
C19 100n
C13 100n
C20 100n
C17 100n
C18 100n
C23 100n
C14 1u
Make sure C is close to pin 44 of RP2040
U3
DVDD
VREG_VOUT
VREG_IN
IOVDD
USB_VDD
ADC_AVDD
USB_DP
USB_DM
R6 27R
R10 27R
Make sure R10 and R11 are close to RP2040
USB_RP_P
USB_RP_N
Raspberry Pi RP2040
GPIO00
GPIO01
GPIO02
GPIO03
GPIO04
GPIO05
GPIO06
GPIO07
GPIO08
GPIO09
GPIO010
GPIO011
GPIO012
GPIO013
GPIO014
GPIO015
GPIO016
GPIO017
GPIO018
GPIO019
GPIO020
GPIO021
GPIO022
GPIO023
GPIO024
GPIO025
GPIO026_ADC0
GPIO027_ADC1
GPIO028_ADC2
GPIO029_ADC3
Alternative to USB connection between CM4 and Pico (Can be used for MIDI)
JP22
JP12
SJP
INT_MIDI_TX
INT_MIDI_RX
R21 2K2
RGB_DATA
TestPoint TP4
D2 LED Y
ROT_VOL_A
ROT_VOL_B
SW_VOL
ROT_GAIN_A
ROT_GAIN_B
SW_GAIN
TESTEN
RP2040
Expression Pedals
R1 1K
J5 Jack 6.35mm
A_EXP1
R2 1K
J8 Jack 6.35mm
A_EXP2
Rotary Encoders
SW1
SW2
Foot Buttons
SW5 Tactile Button
SW6 Tactile Button
SW7 Tactile Button
SW8 Tactile Button
SW9 Tactile Button
SW10 Tactile Button
SW_D
SW_E
SW_F
SW_A
SW_B
SW_C
H10 Spacer
H9 Spacer
H8 Spacer
H13 Spacer
H12 Spacer
H11 Spacer
H2 Midi Bites
MIDI Bites allow to remove some of the board material that is used to hold the DIN5 or 3.5mm Jack connectors and instead mount the connectors to the case and wire them up with J15
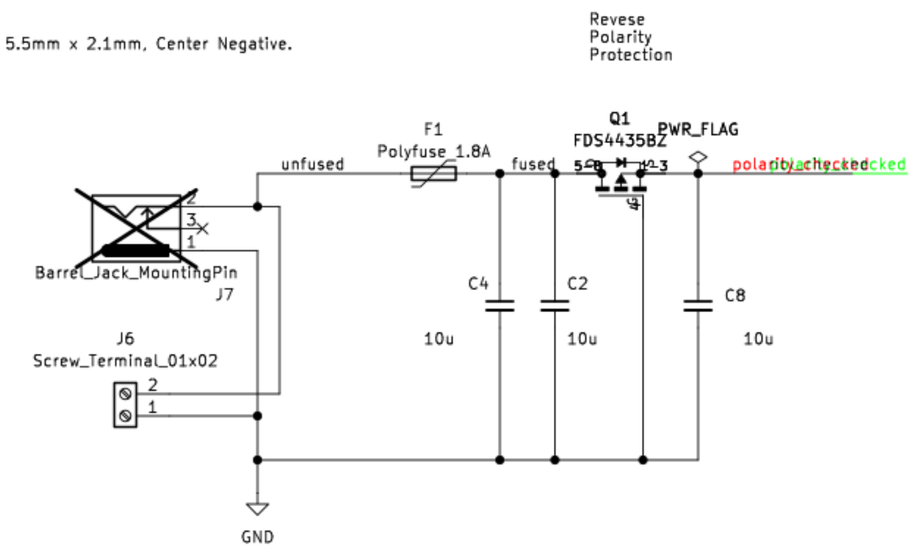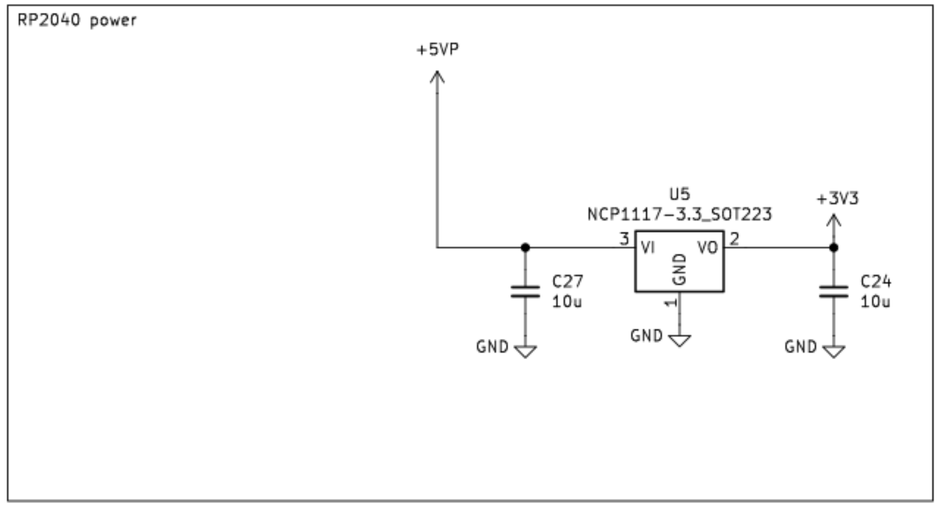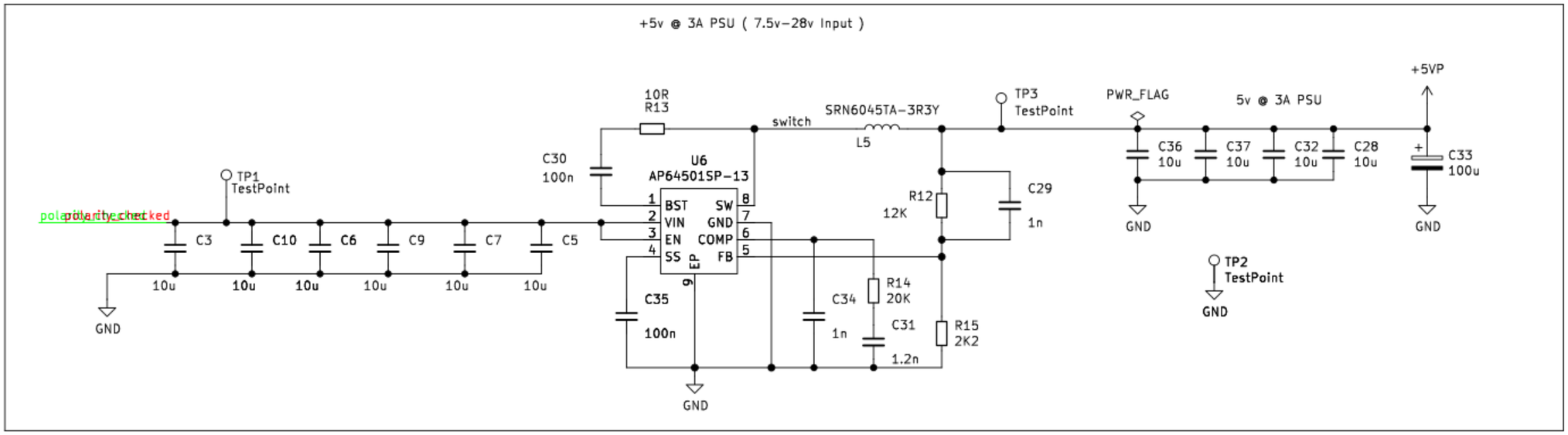
# /Power Supply