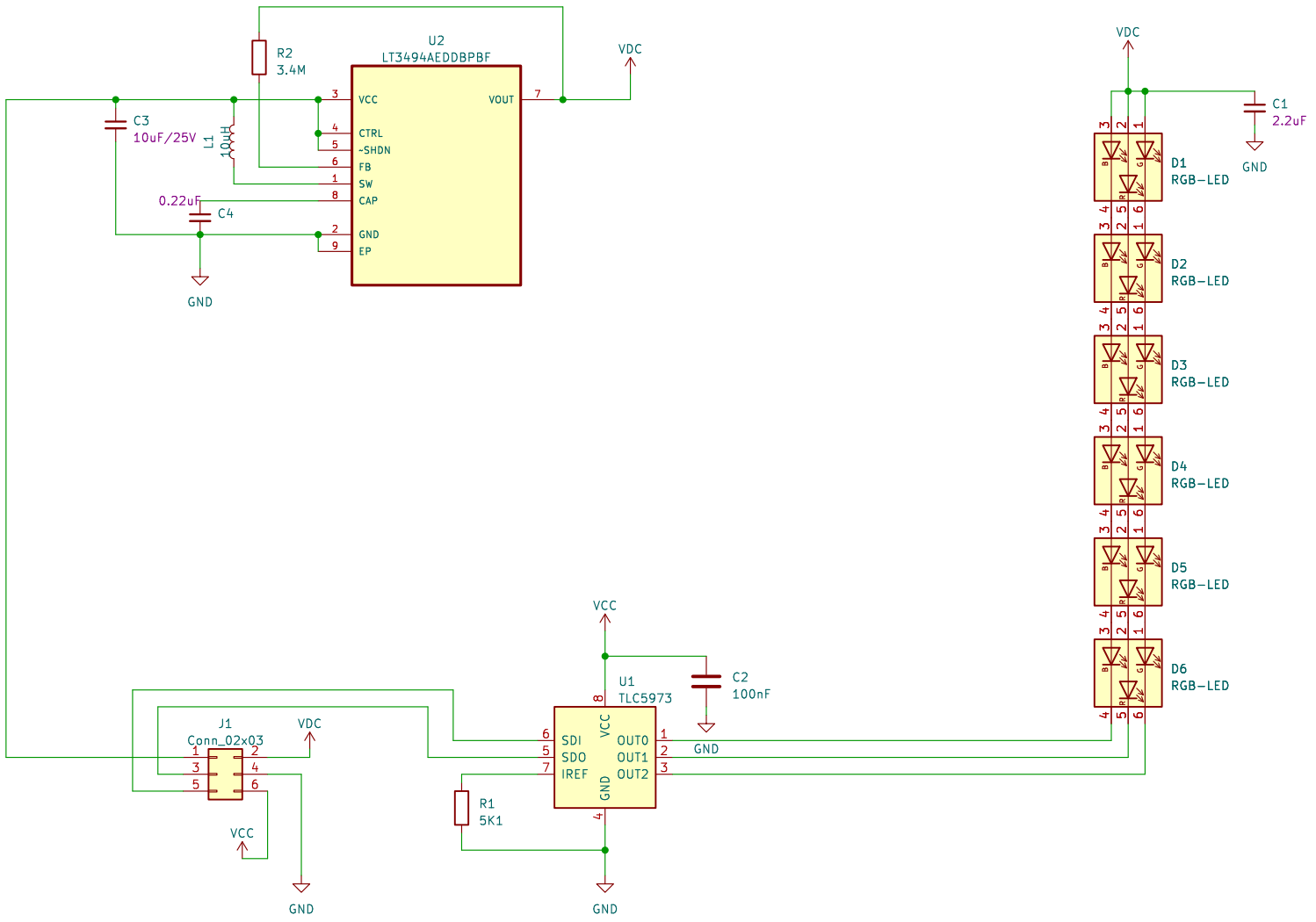

Sheet: /
File: pedalboard-led-ring.kicad_sch

Title:

Size: A4	Date:	Rev:
KiCad E.D.A. kicad-cli 7.0.2.1-36-g582732918d-dirty-deb11		Id: 1/1