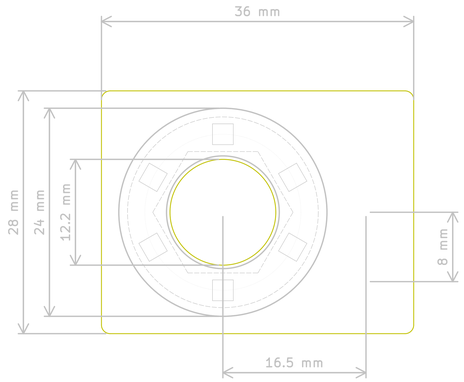

License: CERN Open Hardware Licence Version 2 – Permissive
Source Code: https://github.com/pedalboard/pedalboard-led-ring
https://github.com/pedalboard

Sheet: Front courtyard area
File: pedalboard-led-ring.kicad_pcb

Title: Pedalboard LED Ring

Size: A4	Date: 2023-05-29	**Rev: 1.0.0**
KiCad E.D.A. 7.0.2.1-36-g582732918d-dirty-deb11 + KiBot v1.6.2		Id: 4/6