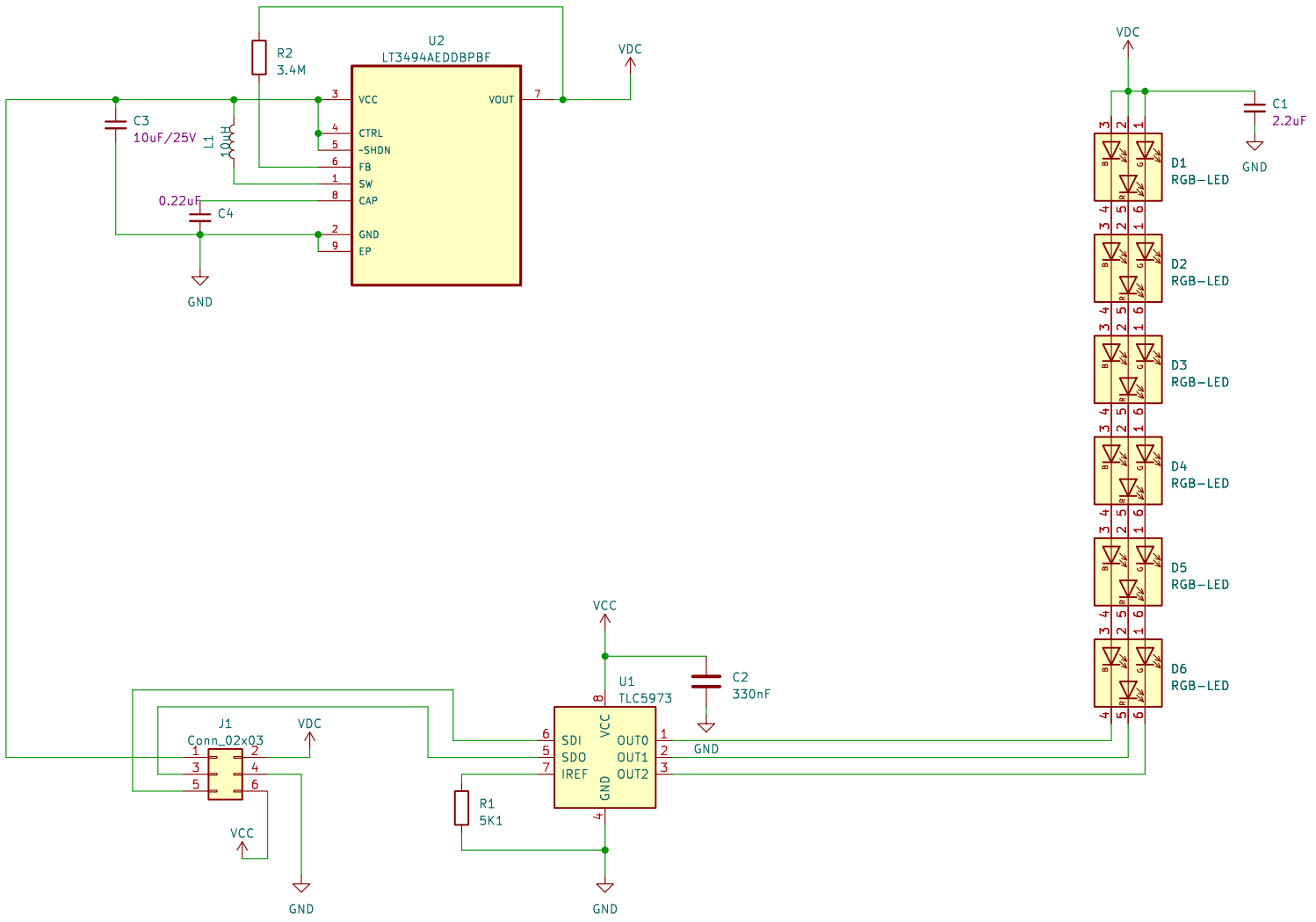


Sheet: /
File: pedalboard-led-ring.kicad_sch

**Title:**

| Size: A4 | Date: | Rev: |
|---|---|---|
| KiCad E.D.A. kicad-cli 7.0.2.1-36-g582732918d-dirty-deb11 | | Id: 1/1 |