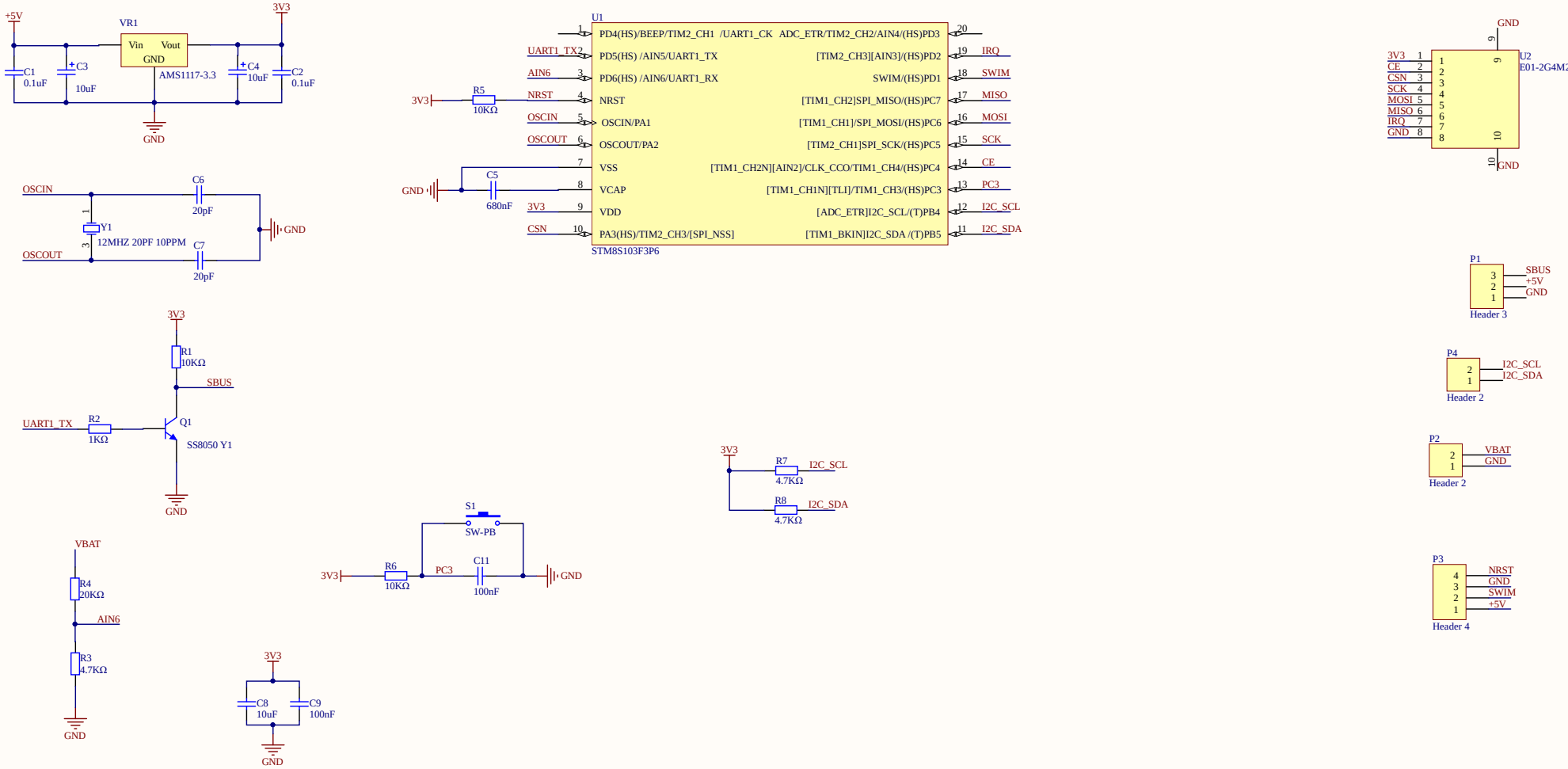


| Title | | |
|---|---|---|
| Size A3 | Number | Revision |
| Date: 2020/7/11 | | Sheet of |
| File: E:\documents2\..\Receiver.SchDoc | | Drawn By: |

Receiver v1.0
Designed by LRH
2020.0.11
S1
GND
EOT-2G4M27SX
GND
VDD
CE
CSN
SCK
MOSI
MISO
IRQ
GND
U1
VR1