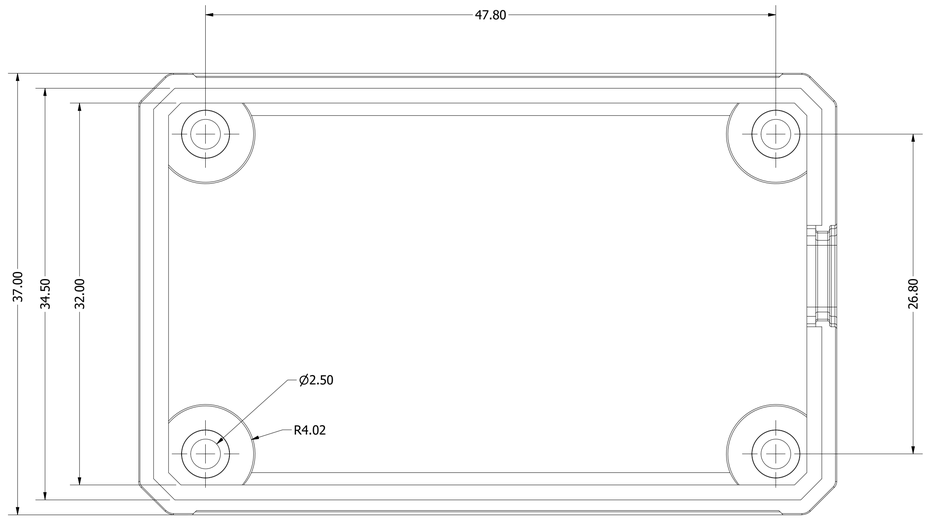

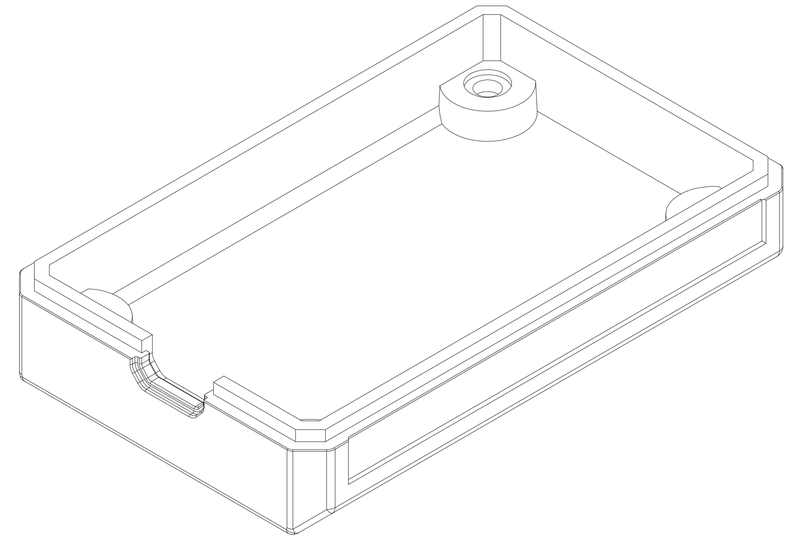

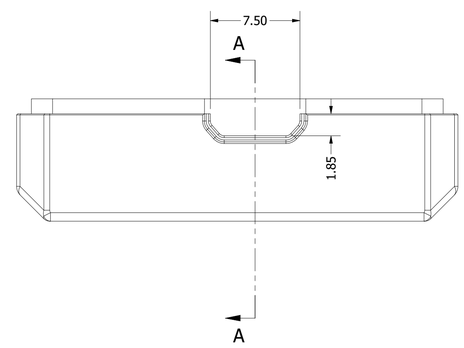

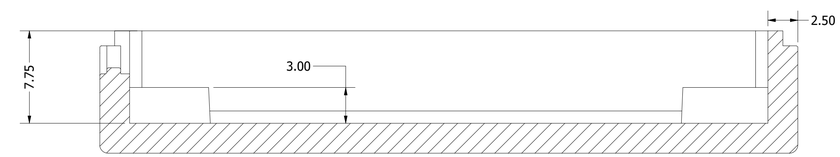

SECTION A-A
SCALE 4: 1

DRAWN Bernardo Rodriguez	5/8/2021			
CHECKED		TITLE		
QA				
MFG				
APPROVED				
		SIZE D	DWG NO Part 1 Neuralume N300	REV
		SCALE 4: 1	SHEET 1 OF 1	