EyeGAIT Schematics

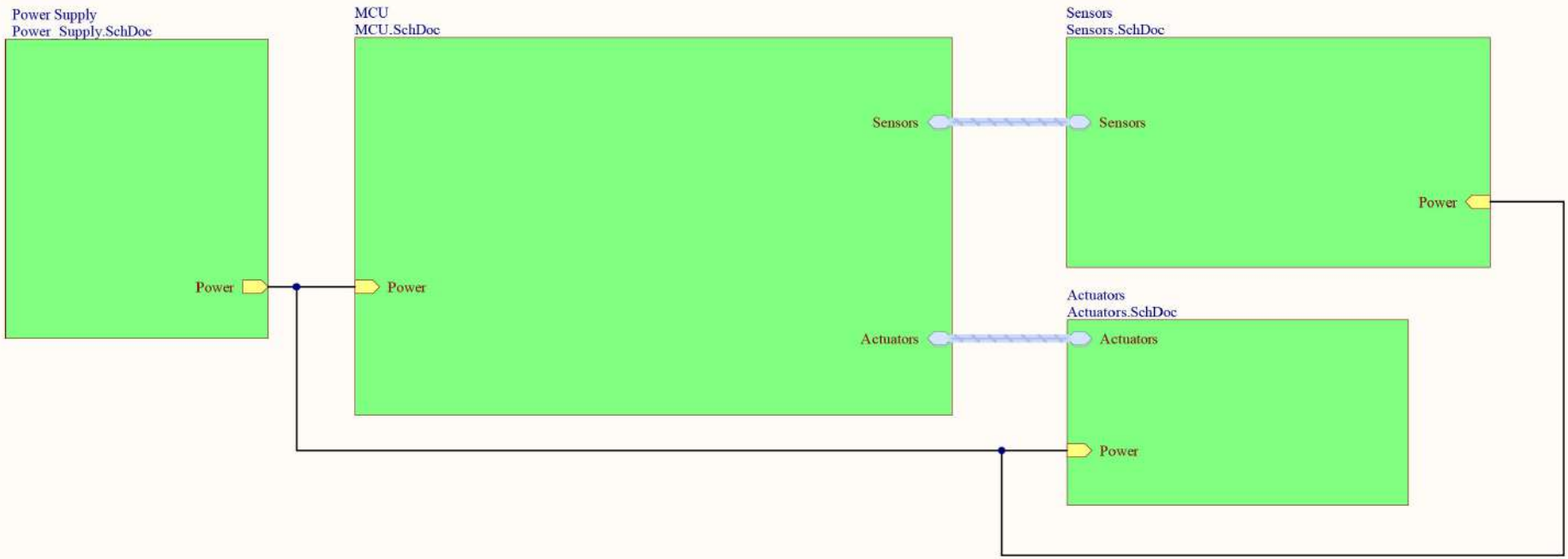

Title: **Eyegait**			
Page Contents: Schematics.SchDoc			*ETSI Telecomunicaciones* *Av. Complutense, 30* *Madrid* *28040* *Spain* *910 67 19 00*
Drawn By: Pedro	Checked By: *		
Size: A4	Number: 1	Revision: 1.0	
Date: 05/11/2023	Time: 22:15:07	Sheet 1 of 5	
License: Student			
Email: #NAME?		Website: https://www.etsist.upm.es	
File: C:\Users\Public\Documents\Altium\SHEMATICS_EYEGAIT\Schematics.SchDoc			

Sensors

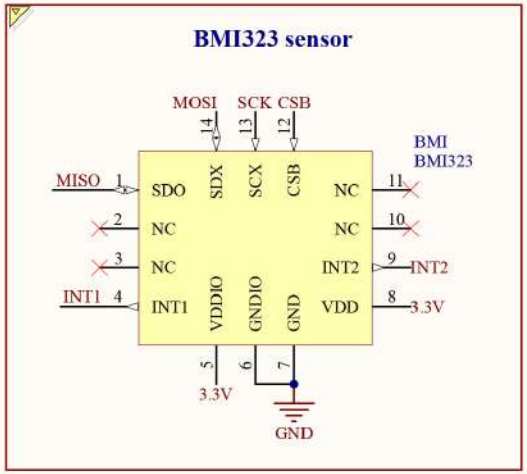

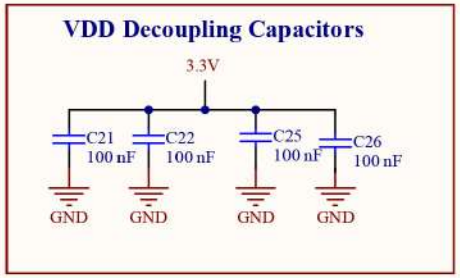

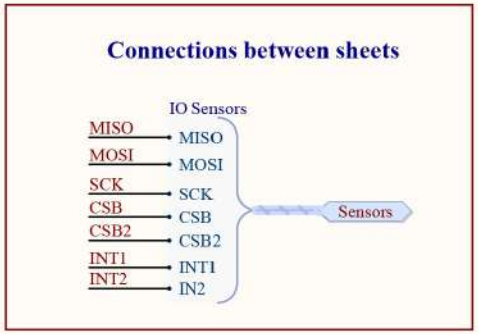

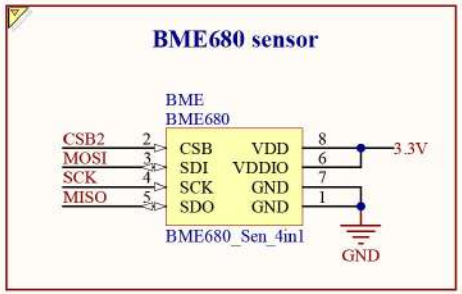

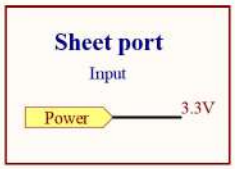

Title: **Eyegait**			*ETSI Telecomunicaciones*
Page Contents: Sensors.SchDoc			*Av. Complutense, 30*
Drawn By: Pedro	Checked By: *		*Madrid*
Size: A4	Number: *	Revision: V 2.0	*28040*
Date: 05/11/2023	Time: 22:15:07	Sheet 2 of 5	*Spain*
			910 67 19 00
License: Student			
Email: #NAME?		Website: https://www.etsist.upm.es	
File: C:\Users\Public\Documents\Altium\SHEMATICS_EYEGAIT\Sensors.SchDoc			

MCU

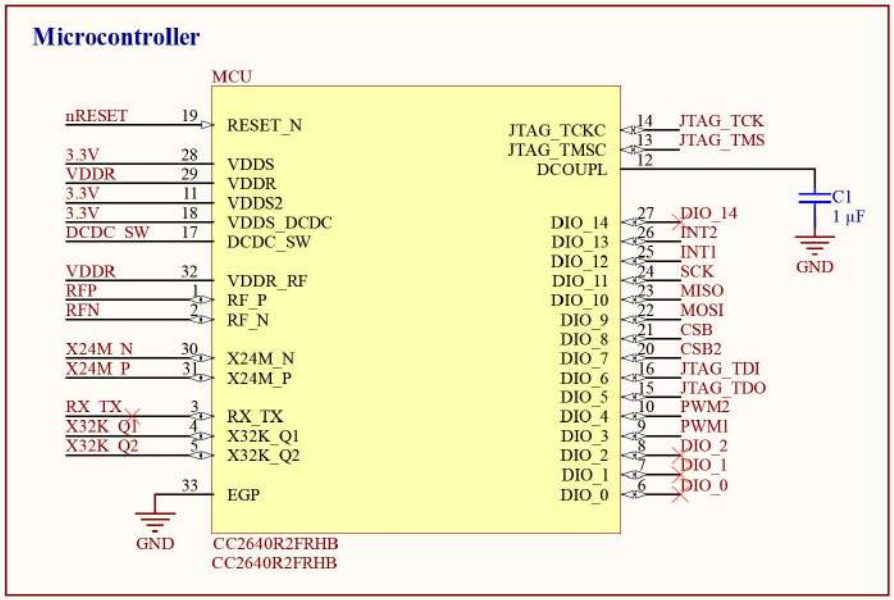

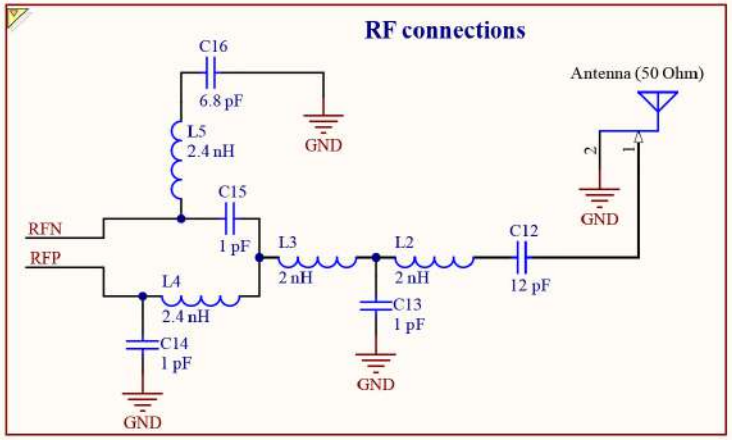

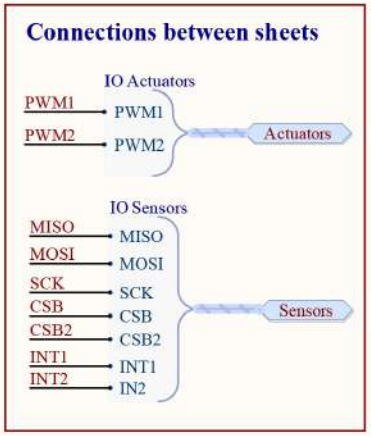

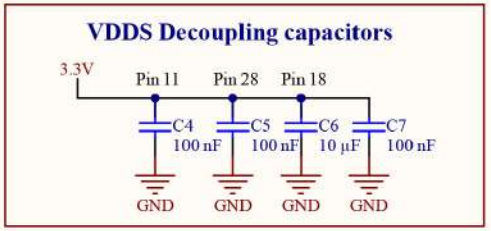

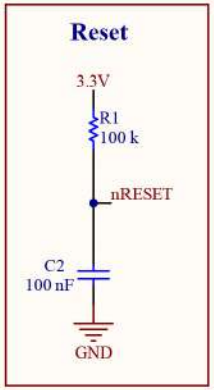

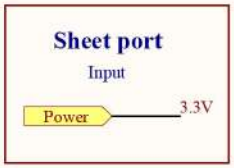

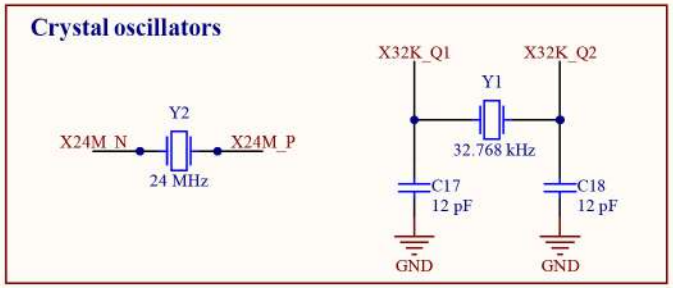

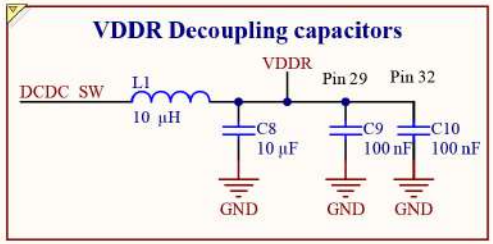

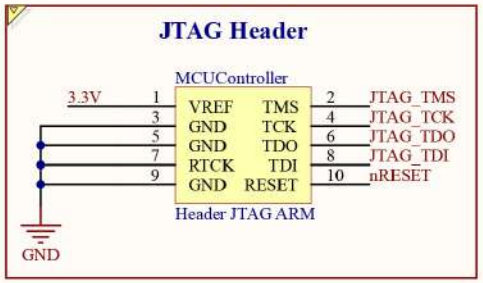

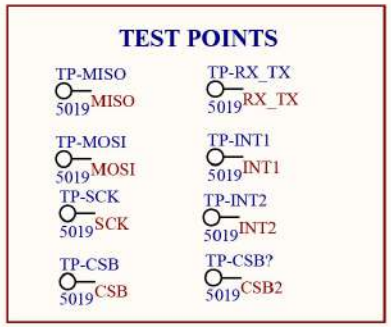

Title: Eyegait			ETSI Telecomunicaciones Av. Complutense, 30 Madrid 28040 Spain 910 67 19 00
Page Contents: MCU.SchDoc			
Drawn By: Pedro	Checked By: *		
Size: A4	Number: *	Revision: V 3.0	
Date: 05/11/2023	Time: 22:15:07	Sheet 3 of 5	
License: Student			
Email: #NAME?		Website: https://www.etsist.upm.es	
File: C:\Users\Public\Documents\Altium\SHEMATICS_EYEGAIT\MCU.SchDoc			

Actuators

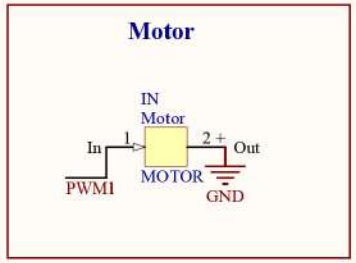

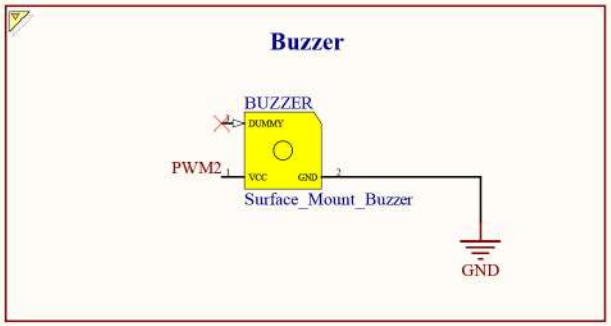

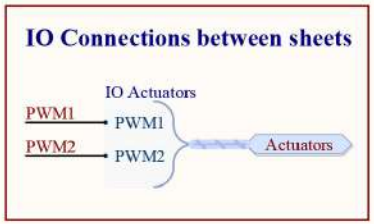

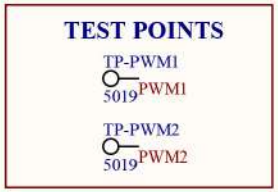

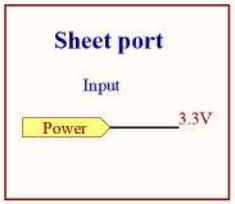

Title: **Eyegait**			
Page Contents: Actuators.SchDoc			*ETSI Telecomunicaciones*
Drawn By: Pedro	Checked By: *		*Av. Complutense, 30*
Size: A4	Number: *	Revision: 1.0	*Madrid*
Date: 05/11/2023	Time: 22:15:08	Sheet 4 of 5	*28040*
			Spain
			910 67 19 00
License: Student			
Email: #NAME?		Website: https://www.etsist.upm.es	
File: C:\Users\Public\Documents\Altium\SHEMATICS_EYEGAIT\Actuators.SchDoc			

Power Supply

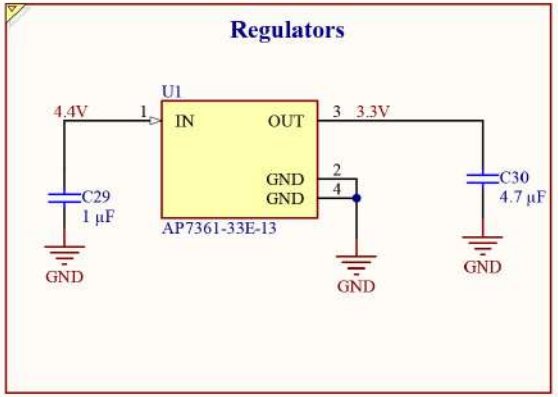

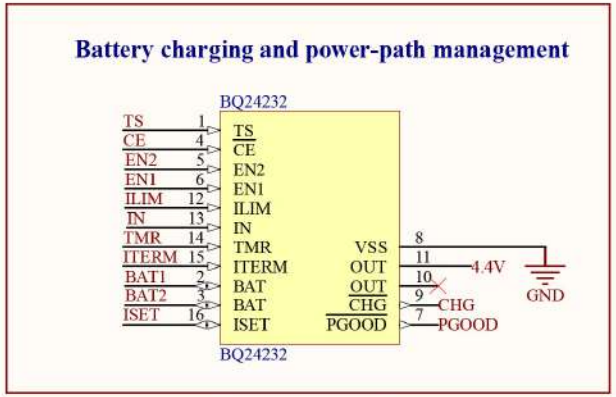

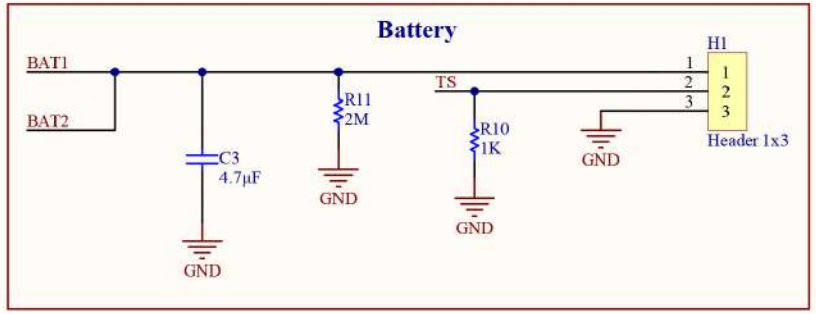

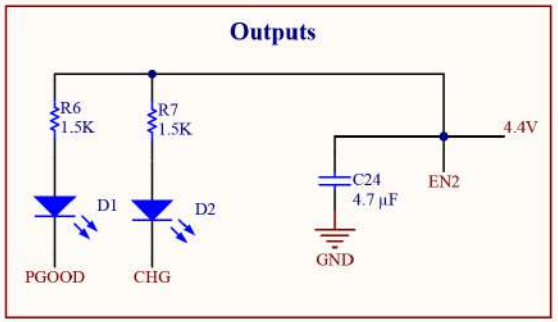

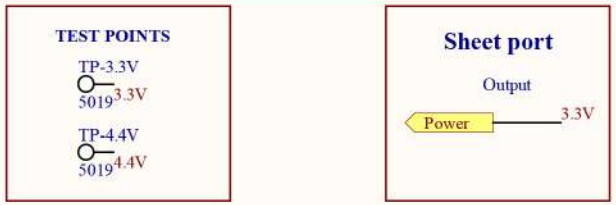

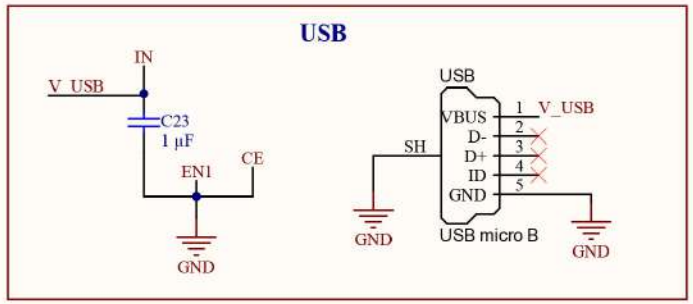

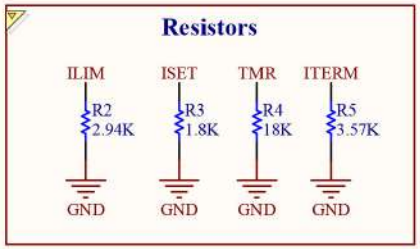

Title: **Eyegait**			*ETSI Telecomunicaciones*
Page Contents: Power_Supply.SchDoc			*Av. Complutense, 30*
Drawn By: Pedro	Checked By: *		*Madrid*
Size: A4	Number: *	Revision: V 2.0	*28040*
Date: 05/11/2023	Time: 22:15:08	Sheet 5 of 5	*Spain*
			910 67 19 00
License: Student			
Email: #NAME?		Website: https://www.etsist.upm.es	
File: C:\Users\Public\Documents\Altium\SHEMATICS_EYEGAIT\Power_Supply.SchDoc			