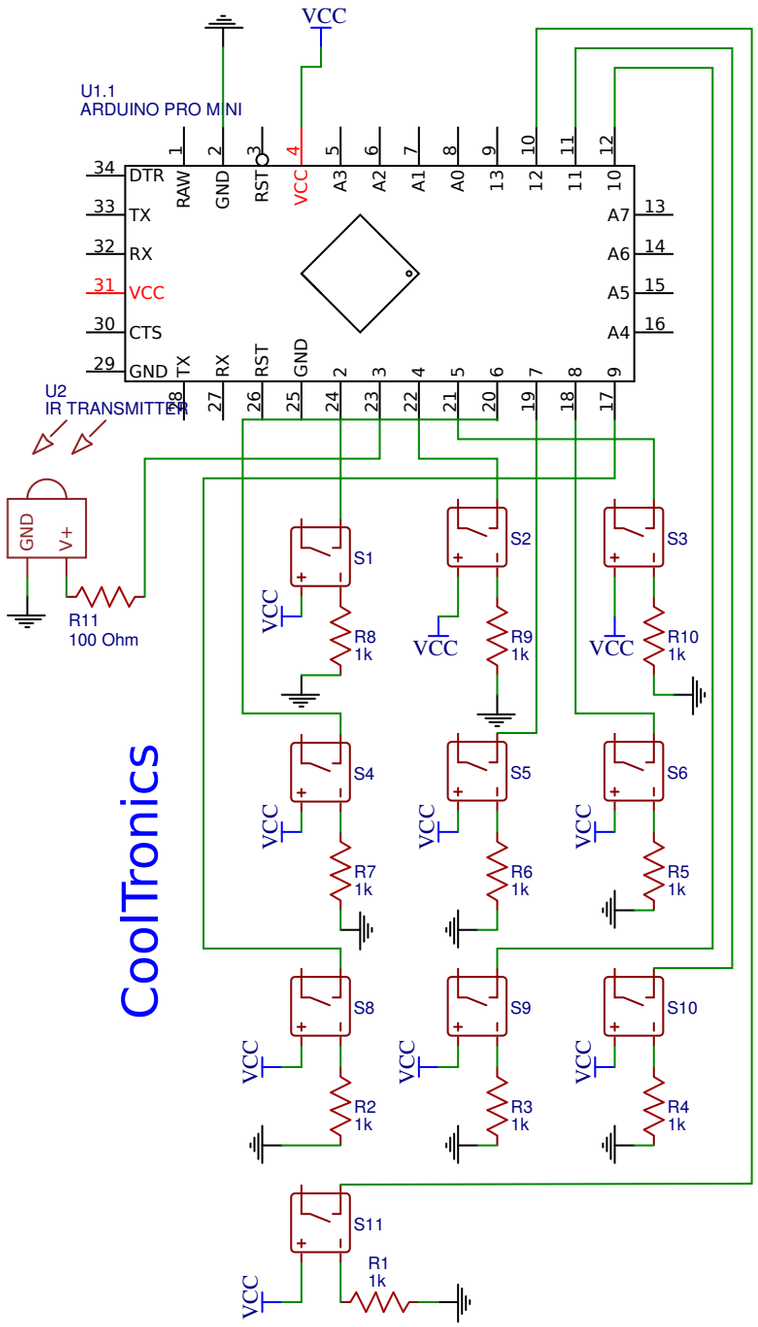

TITLE: IR Remote	REV: 1.0
Date: 2017-01-01	Sheet: 1/1
EasyEDA V3.12.3	Drawn By: Raees