ADVANTEST®

ADVANTEST CORPORATION

T6500 SERIES
VLSI TEST SYSTEM
TESTER SECTION
MAINTENANCE MANUAL

MANUAL NUMBER 8370706-14

Applicable Systems

T6573
T6563
T6533

NOTE: *Prior to performing any maintenance tasks described in this manual, thoroughly read the information related to the safety of the system provided in the "IC Test System Safe Handling Guide".*

© 2000 ADVANTEST CORPORATION
All rights reserved.

First printing October 20, 2000
Printed in Japan

PREFACE

Fluorinert ™ is a registered trademark of 3M.

FC-3283 is one of 3M Fluorinert ™ model names.

For details on signal names and signal allocations on the performance board, refer to "VLSI TEST SYSTEM PERFORMANCE BOARD ASSEMBLY PROCEDURE" for each HI-FIX.

RECORD OF REVISIONS

Rev.	Date	Relevant item	Change
01	Oct 20/00		
02	Nov 20/00		
03	Jan 10/01		
04	Jun 7/01		
05	Jul 26/01		
06	Oct 25/01		
07	Apr 1/02		
08	Oct 1/02		
09	Nov 14/02		
10	Mar 20/03		
11	Jun 16/03		
12	Dec 18/03		
13	Nov 20/09		
14	Dec 21/12	3.2 Periodic Inspection Items	Description of a periodic inspection item, which was previously missing, has been added.
		Appendix 6	“Errors that May Occur when TC7 Is Replaced and Solutions to those Errors” has been added as Appendix 6.

LIST OF EFFECTIVE PAGES

	Preface	Jun 16/03
#	R-1	Dec 21/12
#	P-1	Dec 21/12
#	P-2	Dec 21/12
#	C-1	Dec 21/12
#	C-2	Dec 21/12
#	C-3	Dec 21/12
##	C-4	Dec 21/12
#	F-1	Dec 21/12
	F-2	Dec 18/03
	F-3	Dec 18/03
#	T-1	Dec 21/12
	1-1	Jul 26/01
	1-2	Nov 20/09
	1-3	Oct 20/00
	2-1	Oct 25/01
	2-2	Oct 20/00
	2-3	Oct 20/00
	2-4	Oct 20/00
	2-5	Oct 20/00
	2-6	Jun 16/03
	2-7	Nov 20/09
	2-8	Nov 20/09
	2-9	Apr 01/02
	2-10	Apr 01/02
	2-11	Apr 01/02
	3-1	Nov 20/09
	3-2	Oct 20/00
#	3-3	Dec 21/12
#	3-4	Dec 21/12
#	3-5	Dec 21/12
#	3-6	Dec 21/12
#	3-7	Dec 21/12
#	3-8	Dec 21/12
#	3-9	Dec 21/12
#	3-10	Dec 21/12
#	3-11	Dec 21/12
#	3-12	Dec 21/12
#	3-13	Dec 21/12
#	3-14	Dec 21/12
#	3-15	Dec 21/12
#	3-16	Dec 21/12
#	3-17	Dec 21/12
#	3-18	Dec 21/12
#	3-19	Dec 21/12
#	3-20	Dec 21/12
#	3-21	Dec 21/12
#	3-22	Dec 21/12
#	3-23	Dec 21/12
#	3-24	Dec 21/12
#	3-25	Dec 21/12
#	3-26	Dec 21/12
#	3-27	Dec 21/12
#	3-28	Dec 21/12
#	3-29	Dec 21/12
##	3-30	Dec 21/12
##	3-31	Dec 21/12
	4-1	Dec 18/03
	4-2	Dec 18/03
	4-3	Dec 18/03
	4-4	Dec 18/03
	5-1	Oct 20/00
	5-2	Oct 20/00
	5-3	Oct 20/00
	5-4	Nov 14/02
	5-5	Jun 7/01
	5-6	Oct 20/00
	5-7	Oct 20/00
	5-8	Oct 20/00
	5-9	Jun 7/01
	5-10	Oct 20/00
	5-11	Dec 18/03
	5-12	Dec 18/03
	5-13	Dec 18/03
	6-1	Oct 20/00
	6-2	Oct 20/00
	6-3	Oct 20/00
	6-4	Nov 20/00
	6-5	Oct 20/00
	6-6	Oct 20/00
	6-7	Oct 20/00
	6-8	Oct 20/00
	6-9	Oct 20/00
	6-10	Oct 20/00
	6-11	Oct 20/00
	6-12	Oct 20/00
	7-1	Jun 16/03
	7-2	Jun 16/03
	7-3	Jun 16/03
	8-1	Oct 20/00
	8-2	Nov 20/00
	8-3	Oct 20/00
	8-4	Jul 26/01
	8-5	Oct 20/00
	8-6	Oct 20/00
	8-7	Jun 16/03
	8-8	Oct 20/00
	8-9	Oct 20/00
	8-10	Oct 20/00
	8-11	Oct 20/00
	8-12	Oct 20/00
	8-13	Oct 20/00
	8-14	Oct 20/00
	8-15	Oct 20/00
	8-16	Oct 20/00
	8-17	Oct 20/00
	8-18	Oct 20/00
	8-19	Oct 20/00
	8-20	Oct 20/00
	8-21	Oct 20/00
	8-22	Oct 20/00
	8-23	Oct 20/00
	8-24	Oct 20/00
	8-25	Oct 20/00
	8-26	Oct 20/00
	8-27	Oct 20/00
	8-28	Oct 20/00
	8-29	Oct 20/00
	8-30	Oct 20/00
	8-31	Oct 20/00
	8-32	Jun 7/01
	9-1	Nov 20/09
	9-2	Nov 14/02
	9-3	Nov 20/09
	10-1	Oct 20/00
	10-2	Nov 14/02
	10-3	Jun 16/03
	10-4	Jun 16/03
	11-1	Dec 18/03
	12-1	Apr 01/02
	12-2	Apr 01/02
	12-3	Apr 01/02

Note: Pages with # are revised.
Pages with ## are added.
Pages with ( ) are deleted.

List of Effective Pages

	13-1	Dec 18/03
	13-2	Dec 18/03
	13-3	Dec 18/03
	13-4	Dec 18/03
	13-5	Dec 18/03
	13-6	Dec 18/03
	13-7	Dec 18/03
	13-8	Dec 18/03
	13-9	Dec 18/03
	13-10	Dec 18/03
	13-11	Dec 18/03
	13-12	Dec 18/03
	13-13	Dec 18/03
	13-14	Dec 18/03
	A1-1	Oct 20/00
	A1-2	Nov 20/09
	A1-3	Oct 20/00
	A2-1	Jun 16/03
	A2-2	Jun 16/03
	A2-3	Jun 16/03
	A2-4	Jun 16/03
	A3-1	Jun 16/03
	A3-2	Jun 16/03
	A3-3	Jun 16/03
	A3-4	Jun 16/03
	A3-5	Jun 16/03
	A3-6	Jun 16/03
	A3-7	Jun 16/03
	A3-8	Jun 16/03
	A3-9	Jun 16/03
	A4-1	Dec 18/03
	A4-2	Jun 16/03
	A4-3	Dec 18/03
	A5-1	Dec 18/03
	A5-2	Dec 18/03
	A5-3	Dec 18/03
##	A6-1	Dec 21/12
##	A6-2	Dec 21/12
##	A6-3	Dec 21/12
##	A6-4	Dec 21/12
##	A6-5	Dec 21/12
##	A6-6	Dec 21/12
##	A6-7	Dec 21/12

Note: Pages with # are revised.
Pages with ## are added.
Pages with ( ) are deleted.

TABLE OF CONTENTS

1. OVERVIEW 1-1

1.1 General Precautions 1-1
1.1.1 Environmental Conditions 1-1
1.1.2 Handling Precautions 1-2
1.1.3 Test Precautions 1-3
1.1.4 Board Replacement Precautions 1-3
1.1.5 Precautions for Abnormal Test System Shut Down 1-3
1.1.6 Initial Settings of DMM (R6581T) 1-3

2. SYSTEM OPERATION 2-1

2.1 Operation on Performance Board (PB) Switch Panel 2-1
2.2 Starting the Test System (Normal Mode) 2-2
2.3 Resetting the EMO Switch 2-5
2.4 System Maintenance 2-6
2.4.1 Diagnosis 2-6
2.4.2 Initialization 2-6
2.4.3 Calibration 2-6
2.5 Using the Tester after Installation, Inspection, and Board Replacements 2-7
2.5.1 After Installation/System Calibrations 2-7
2.5.2 After Periodic Inspections 2-7
2.5.3 After Board Replacements 2-8
2.5.4 After Board Installation or Removal 2-11

3. MAINTENANCE OPERATION 3-1

3.1 Hot Work 3-2
3.2 Periodic Inspection Items 3-3
3.3 Replacing the Fan Block (Hot Work Type 1) 3-6
3.3.1 Replacing the Fan Block for the Unit Power Supply 3-6
3.3.2 Replacing the Fan Block for the Unit 3-7
3.4 Replacing the Unit Power Supply 3-8
3.4.1 Procedure for Removing the Unit Power Supply (Hot Work Type 1) 3-8
3.4.2 Precautions to Be Taken When Installing the Unit Power Supply 3-9
3.5 Precautions to Be Taken when Replacing AC Power Supply (AC CONT) 3-11
3.6 Opening/Closing the Frame Panel 3-11
3.7 When System Does Not Start Properly 3-14
3.7.1 When the System Monitor Does Not Start 3-14
3.7.2 Checking FATAL ERROR 3-15
3.7.3 Recovering the System from the Shutdown by the init5 Command .. 3-15
3.8 Starting the System Monitor DIAG 3-16
3.9 System Monitor Error Codes 3-19
3.10 Monitor Interface Error Codes 3-23

3.11 Replacing the TC4 System Monitor (Replacing the TC7 IO IF) 3-26
3.11.1 Using ROM Monitor Board 3-27
3.11.2 Setting the Monitor I/F ID 3-28
3.11.3 Setting Date and Time 3-30
3.11.4 Setting the System Type 3-31

4. LED SPECIFICATIONS 4-1

4.1 TC4 and TC7 UNIT LEDs Specifications 4-1
4.2 Specifications of the DP Unit LEDs 4-3
4.3 Specifications of the Monitor I/F LEDs 4-4

5. BOARD REPLACEMENT 5-1

5.1 How to Read the Cable Marker 5-1
5.2 Detaching/Attaching Boards Mounted Inside the Frame 5-2
5.3 Detaching/Attaching the Boards Mounted in the Test Head 5-3
5.3.1 Detaching/Attaching the Mounted Board 5-3
5.4 Procedure for Replacing the Pin Electronics Card (PE) 5-4
5.5 Procedure for Replacing the Test Head Board Power Supply 5-6
5.6 Precautions to Be Taken when Carrying Boards 5-8
5.7 Operation when Replacing Boards 5-9

6. UNIT, POWER SUPPLY LAYOUT, AND VOLTAGE SPECIFICATION 6-1

6.1 System Layout 6-1
6.2 Arrangement Inside the Main Frame 6-2
6.3 Installed Safety Device Locations 6-5
6.4 Center of Gravity and Skeleton Diagrams 6-10
6.5 Specifications of Unit Power Supplies 6-12

7 BOARD LOCATION 7-1

8. WIRING DIAGRAM 8-1

8.1 Signal Wiring 8-1
8.2 Power Supply Wiring 8-10

9. HANDLING OF HIFIX 9-1

10. SPARE PARTS KIT 10-1

11. MAINTENANCE PARTS 11-1

12. REPLACING PARTS 12-1

12.1 Test Head Air Coupler Replacement Procedure 12-1

13. EXTERNAL TC7 MAIN FRAME 13-1

13.1 Unit Layout (All Units) 13-1
13.2 Unit Layout (Power Supplies) 13-2
13.3 Unit Center of Gravity 13-3
13.4 Unit Power Supply Specification Table 13-4
13.5 List of the Boards Required when the External TC7 is Set 13-4
13.6 External TC7 Wiring Layout 13-5

APPENDIX 1. MAINTENANCE OF AIR COMPRESSOR PANEL UNIT A1-1

A1.1 Air Pressure Setting A1-1
A1.2 Air Compressor Panel Cable Connection A1-2

APPENDIX 2. PHOTOELECTRIC SMOKE DETECTION SYSTEM A2-1

A2.1 Maintenance for Environmental Processor A2-1
A2.2 Smoke Sensor Specifications A2-2
A2.3 Smoke Detection System Block Diagram A2-2
A2.4 Workaround List A2-3
A2.4.1 When TROUBLE Light Turns On A2-3
A2.4.2 When TROUBLE Lights are Flashing A2-4

APPENDIX 3. SETTING GPIB-VME (H3-6815) MINI JUMPERS AND DIP SWITCHES A3-1

A3.1 Mini Jumper and DIP Switch Locations A3-1
A3.2 Setting the First GPIB Board (Standard) A3-2
A3.3 Setting the Second GPIB Board (Optional) A3-6

APPENDIX 4. SETUP FOR V0108 AND V0108A (TOTOKU 15-INCH LCD MONITOR) A4-1

A4.1 Setting the TC4 and TC7 ..... A4-1
A4.2 LCD Monitor Setup A4-2
A4.2.1 Location of the Screen Setting Buttons A4-2
A4.2.2 Screen Adjustment A4-3

APPENDIX 5. DISK STORAGE JUMPER SETTING A5-1

A5.1 AHN-DK32DJ*36 and AHN-DK32EJ*36 ..... A5-1

APPENDIX 6. Errors that May Occur when TC7 Is Replaced and Solutions to those Errors A6-1

A6.1 Startup Errors A6-1
A6.1.1 Panic Error that Occurs when the Operating System Starts A6-1
A6.1.2 Error that Occurs when the GUI Environment Starts A6-2
A6.2 Solutions A6-3
A6.2.1 Method for Installing the SCSI Driver A6-3
A6.2.2 Solution to the Error that Occurs when the GUI Environment Starts A6-5
6.2.2.1 Differences of Graphic Cards A6-5
6.2.2.2 Method for Installing the Driver A6-6

LIST OF ILLUSTRATIONS

No.	Title	Page
2-1	The PB Control Switches	2-1
2-2	AC CONT Panel	2-2
3-1	Removing the Fan Block for the Unit Power Supply	3-6
3-2	Removing the Fan Block for the DPU Unit	3-7
3-3	Removing the Fan Block for the Main frame	3-7
3-4	Removing the Unit Power Supply	3-8
3-5	Marker on A Cable	3-9
3-6	Terminal Numbers on Unit Power Supply (1)	3-9
3-7	Terminal Numbers on Unit Power Supply (2)	3-9
3-8	Terminal Numbers on Unit Power Supply (3)	3-10
3-9	AC CONT Panel and MODE SELECT Switch Panel	3-12
3-10	TC7 CPU UNIT	3-13
5-1	Board Handle (KH9-90287)	5-2
5-2	Detaching and Attaching the Board	5-2
5-3	Test Head Board Handle	5-3
5-4	Detaching/Attaching Test Head Board	5-3
5-5	TH (1)	5-4
5-6	How to take out the tube	5-5
5-7	Procedure for Replacing the Test Head Board Power Supply	5-7
6-1	System Layout	6-1
6-2	Arrangement Inside the Main Frame (FRONT VIEW)	6-2
6-3	Arrangement Inside the Main Frame (REAR VIEW)	6-3
6-4	UPS Power Supply Layout Diagram	6-4
6-5	Locations where MF Safety Devices Are Installed (FRONT VIEW for UP FLOW)	6-5
6-6	Locations where MF Safety Devices Are Installed (REAR VIEW for UP FLOW)	6-6
6-7	Locations where MF Safety Devices Are Installed (FRONT VIEW for DOWN FLOW)	6-7
6-8	Locations where MF Safety Devices Are Installed (REAR VIEW for DOWN FLOW)	6-8
6-9	Locations where TH Safety Devices Are Installed	6-9
6-10	Center of Gravity of the Main Frame	6-10
6-11	Skeleton Diagram of Main Frame	6-11
8-1	Tester Bus Cable Connection	8-1
8-2	TC4 Unit Wiring (1)	8-2
8-3	TC4 Unit Wiring (2)	8-3
8-4	TC4 Unit Wiring (3)	8-3
8-5	DPU Cable Connection	8-4
8-6	DPU Cable Connection (DPU BWB)	8-5
8-7	TH BWB Cable Connection (1)	8-6
8-8	TH BWB Cable Connection (2)	8-7
8-9	THU Cable Connection (TH BPS)	8-8
8-10	MONITOR I/F Cable Connection	8-9
8-11	Main Frame 200 VAC Wiring (1)	8-10
8-12	Main Frame 200 VAC Wiring (2)	8-11

No.	Title	Page
8-13	270 VDC Wiring (1)	8-12
8-14	270 VDC Wiring (2)	8-13
8-15	270 DVC Wiring (3)	8-14
8-16	System ON/OFF Cable Connection (1)	8-15
8-17	System ON/OFF Cable Connection (2)	8-16
8-18	System ON/OFF Cable Connection (3)	8-17
8-19	System ON/OFF Cable Connection (4)	8-18
8-20	System ON/OFF Cable Connection (5)	8-19
8-21	System ON/OFF Cable Connection (6)	8-20
8-22	DC Wiring (1)	8-21
8-23	DC Wiring (2)	8-22
8-24	DC Wiring (3)	8-23
8-25	DC Wiring (4)	8-24
8-26	Sensor Cable Connection (Smoke, Fan, Temperature Sensor)	8-25
8-27	FAN AC/DC Wiring	8-26
8-28	AC CONT Wiring (1)	8-27
8-29	AC CONT Wiring (2)	8-28
8-30	Control Box, Air Control Unit Wiring	8-29
8-31	DMM/FTU Temperature Sensor Connection	8-30
8-32	FG Connection	8-31
8-33	IDDQ Cable Connection	8-32
12-1	Air Connector A Removal	12-1
12-2	Air Connector B and Coupler Base Removal	12-2
12-3	Coupler Removal	12-3
13-1	Unit Layout (All Units)	13-1
13-2	Unit Layout (Power Supplies)	13-2
13-3	Unit Center of Gravity	13-3
13-4	200 V AC cable and Earth Connection Diagram	13-5
13-5	IO IF Board and DC Connection Diagram	13-6
13-6	TC7 Main Unit Cable Connection Diagram	13-7
13-7	AC CONT Connection Diagram 1	13-8
13-8	AC CONT Connection Diagram 2	13-9
13-9	Control Panel and Air Control Unit Connection Diagram	13-10
13-10	Tester Bus Connection Diagram	13-11
13-11	DC Connection Diagram	13-12
13-12	HL1 TC7 Sensor Cable Connection Diagram (Smoke, Fan, and Temperature sensors)	13-13
13-13	DMM Connection Diagram	13-14
A1-1	Assembly of BLG-024720 Air C Compressor Panel (Front View)	A1-2
A3-1	Mini Jumper and DIP Switch Locations	A3-1
A3-2	Setting VME Base Address (W4)	A3-2
A3-3	Settings of Interrupt Line Code (W1, W3)	A3-3
A3-4	Settings of VMEbus Interrupt Priority Code (U27)	A3-3
A3-5	Definitions for Each Bit of the DIP Switches U34 and U45	A3-4

No.	Title	Page
A3-6	Setting Example for the DIP Switch U34	A3-4
A3-7	Setting Example for the DIP Switch U45	A3-5
A3-8	Setting of Access Mode (W2)	A3-5
A3-9	Setting of VME Base Address (W4) (Second GPIB Board Optional)	A3-6
A3-10	Settings of Interrupt Line Code (W1, W3) (Second GPIB Board Optional)	A3-7
A3-11	Settings of VMEbus Interrupt Priority Code (U27) (Second GPIB Board Optional)	A3-7
A3-12	Definitions for Each Bit of the DIP Switches U34 and U45 (Second GPIB Board Optional)	A3-8
A3-13	Setting Example for the DIP Switch U34 (Second GPIB Board Optional)	A3-8
A3-14	Setting Example for the DIP Switch U45 (Second GPIB Board Optional)	A3-9
A3-15	(Second GPIB Board Optional)	A3-9
A4-1	Location of the LCD Monitor Setup Buttons	A4-2
A5-1	Hard Disk Top View	A5-1
A5-2	Hard Disk Bottom View	A5-2
A5-3	Mini Jumper Setting	A5-3

LIST OF TABLES

No.	Title	Page
2-1	Boards for the Procedure (1)	2-8
2-2	Boards for the Procedure (2)	2-9
2-3	Boards for the Procedure (3)	2-10
3-1	Periodic Inspection Items	3-4
3-4	MODE SELECT SW Code	3-12
3-5	Relationship between LEDs code and START DIAG	3-16
3-6	Relationship between STATUS Codes and System Monitor Self-diagnosis	3-17
3-7	Relationship between STATUS Codes and Monitor I/F Communication Diagnosis	3-17
3-8	Relationship between STATUS Codes and TC Communication Diagnosis	3-17
3-9	Relationship between STATUS Codes and Error Processing Sequence	3-18
3-10	Relationship between the STATUS Codes and Suggested Actions	3-19
3-11	Monitor Interface Error Code(TC4)	3-23
3-12	Monitor Interface Error Code(TC7)	3-24
4-1	Specifications of the TC4 Unit LEDs	4-1
4-2	Specifications of the TC7 Unit LEDs	4-1
4-3	Specifications of the DP Unit LEDs	4-3
4-4	Specifications of the Monitor I/F LEDs	4-4
6-1	Specifications of Unit Power Supplies in the Main Frame	6-12
6-2	Specifications of Unit Power Supplies	6-12
7-1	TC4 Mounting Board Location	7-1
7-2	DPU Mounting Board Location	7-2
7-3	Monitor I/F Mounting Board Location	7-2
7-4	TH Mounting Board Location	7-3
13-1	External TC7 Main Frame Power Supply Specification	13-4
13-2	Voltage Adjustment when the External TC7 is Set	13-4
13-3	Board Mounted in the TC Unit	13-4
13-4	IO IF Board Mounted in the External TC7	13-4
13-5	Upgraded MF Board	13-4
A1-1	Prober Control Cable Connection	A1-3

1. OVERVIEW

Please read the “IC TEST SYSTEM SAFE HANDLING GUIDE” before reading this manual.

1.1 General Precautions

1.1.1 Environmental Conditions

(1) Use your test system within the scope of environmental conditions that are specified in the “T6573/T6563/T6533 Production Description Manual (8350430).” Note that using the test system in areas with temperatures exceeding the recommended range can shorten the operating life of the system.

(2) If the ambient humidity exceeds the operating humidity range when the system is idle, wait until the humidity falls within the operating range before turning on the power. When installing an air conditioning system, make sure it has a humidifier.

(3) Since the magnetic disk drive is susceptible to vibration, be careful not to apply vibration to it, even when it is not operating. If the magnetic disk drive needs to be moved and exposure to vibration is unavoidable, please contact ADVANTEST.

(4) The test system generates a large amount of heat and as a result uses a fan cooling system to prevent overheating. Dust and dirt may collect in the test system over time, causing the degrading the effectiveness of the cooling system, and this may eventually shorten the equipment life. To help prevent this, keep the room where the test system is installed as clean as possible, and prohibit smoking.

1.1.2 Handling Precautions

(1) When using the test system software, follow instructions in the “Viewpoint System Startup Guide (8335054).”

(2) To change the TC host name, refer to the “Viewpoint System Startup Guide (8335054).” Also, if the test system has a HRS, change its settings referring to the “HRS Software User’s Manual (8269048).”

(3) When not using the magnetic tape drive or line printer, turn off the power to these pieces of equipment. Remove the tape from the drive and keep it in a safe place.

(4) When using the test system, always make sure its doors, panels, and station covers are attached properly.

(5) The performance board has device power supply outputs and driver outputs terminals. Do not short these together or to the ground unless absolutely necessary. Do not use external power supplies for the performance board. The performance board contains utility power supplies VCC, VEE, +15 V, and -15 V. If additional power supplies are required, use a DC-DC converter with VCC or VEE, etc. Furthermore, RLVCC is provided for relays control.

(6) Minimize the number of times the test system is turned on and off.

(7) Make sure the fans are stopped before you insert or remove a connector or board to and from the test system.

(8) If you are going to move the test system, always contact ADVANTEST beforehand.

(9) For details on the HSCLK option, refer to "VLSI TEST SYSTEM High speed clock option REFERENCE MANUAL (8700067)".

(10) Lithium batteries are used in the TC7. When disposing of the test system, follow all applicable laws and regulations for industrial waste disposal.

WARNING

When working with more than two person, make sure safety of others.

1.1.3 Test Precautions

(1) Most devices, not only MOS but bipolar devices as well, may be damaged by static induction during handling. When handling devices, always be sure to wear the included grounding wristband.

(2) When using an oscilloscope or similar unit to observe the input/output waveforms of a device during testing, connect the ground terminal to the tester's ground before connecting the probe. Detach ground connections after you have finished disconnecting the probe and all other units.

(3) After starting the tester, wait for at least 30 minutes before using the system.

1.1.4 Board Replacement Precautions

(1) Before inserting or removing a board, always make sure the power supply to the test system is turned off. Insert or remove the board gently and never place a charged material on the board.

(2) The boards used in the test system are interchangeable and can easily be replaced as long as they have been manufactured to the same standard. When replacing boards, execute the initialize/calibration sequence to update the system board information files. (Refer to Section 2.4, "System Maintenance," and Section 5.7, "Operation when Replacing Boards.")

1.1.5 Precautions for Abnormal Test System Shut Down

If the power supply is shut down by external factors (e.g., lightning), the files may be damaged. When the system is restarted, the command fsck (file system check) automatically repairs as much damage as possible. However, if the system is severely damaged, you will be asked by fsck for instructions. For details, refer to the explanation for fsck in the "Command Reference Manual" from Sun Microsystems, Inc.

1.1.6 Initial Settings of DMM (R6581T)

(1) Setting GPIB addresses

Press the [MENU] key.

Choose GPIB using the ◁ and ▷ keys, then press the [ENTER] key.

Choose ADDRESS using the ◁ and ▷ keys, then press the [ENTER] key.

Set ADDRESS to 24 using the △ and ▽ keys, then press the [ENTER] key.

Choose LANGUAGE using the ◁ and ▷ keys, then press the [ENTER] key.

Choose ADVANTEST using the ◁ and ▷ keys, then press the [ENTER] key.

Press the [HOME] key.

2. SYSTEM OPERATION

2.1 Operation on Performance Board (PB) Switch Panel

(1) Locking/ unlocking the performance board (See Figure 2-1.)

During manual testing, use the switches at the front of the test head. The switches located here are MB LOCK and MB FREE, the appropriate light turns on depending on whether the performance board is locked or free.

(2) The utility power supply (See Figure 2-1.)

During manual testing, use the UTILITY PS switch located at the front of the test head. This switch allows you to turn the utility power supplies fed to the performance board (±15 V, VCC, VEE, RLVCC) on or off. However, this switch can only be used if the performance board is locked.

The UTILITY PS switch automatically goes on when the performance board is locked and goes off when the performance board is unlocked.

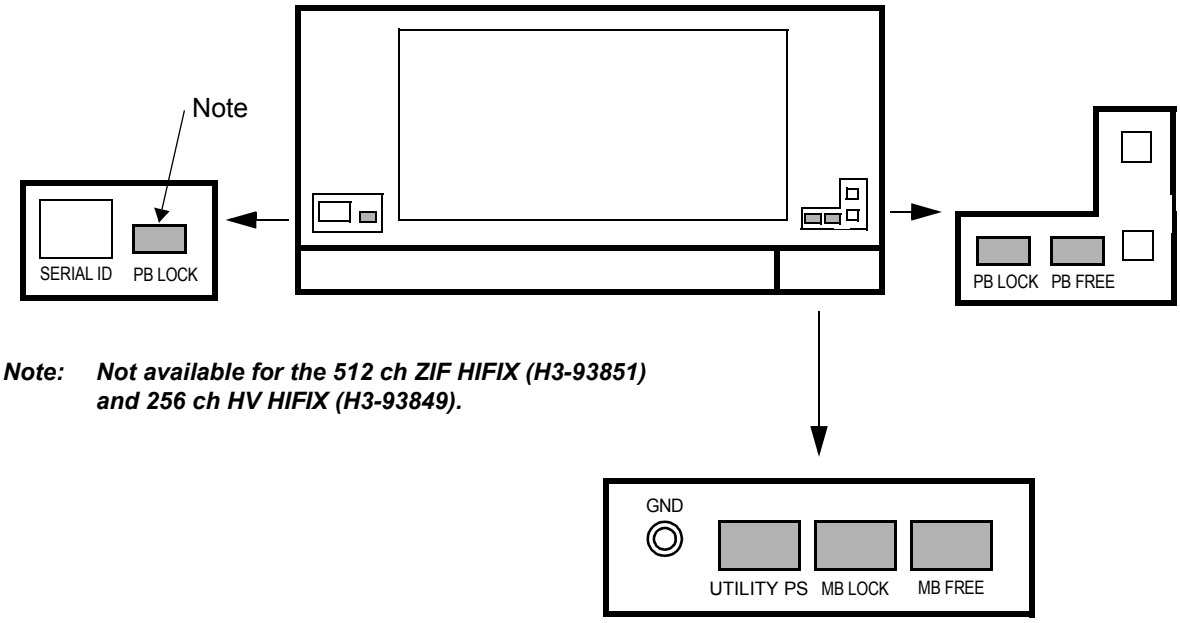

Note: ***Not available for the 512 ch ZIF HIFIX (H3-93851) and 256 ch HV HIFIX (H3-93849).***

Figure 2-1 The PB Control Switches

2.2 Starting the Test System (Normal Mode)

All test system startup operations are managed by the system monitor. Sensors and power supply faults are checked by the system monitor and monitor interface. If no faults are found, the test system starts up normally. If a fault is found when starting the system, the power supply goes off automatically.

System monitor documentation rules

□ mark:	Denotes information that needs to be verified.
△ mark:	Denotes the method of operation.
▲ mark:	Denotes possible work around or solution.
LED:	Denotes the STATUS message display by LED on the AC CONT panel unless otherwise noted.
Monitor I/F:	Denotes the monitor interface unless otherwise noted.
0xXX:	Denotes hexadecimal representation of numbers.

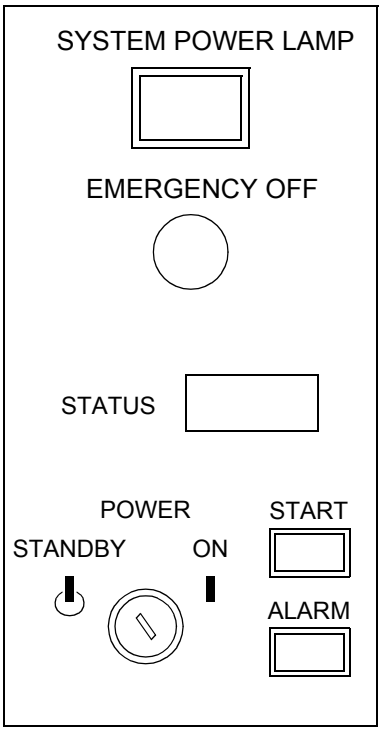

Figure 2-2 AC CONT Panel

(1) Power On Procedure

□ Check 1:	Make sure that the EMERGENCY OFF (EMO) switch has been reset.
□ Check 2:	Make sure that the key switch on the AC CONT panel is in the off position.
△ Operation 1:	Hold down the START switch on the AC CONT panel while you perform check 4.
□ Check 4:	Make sure that the LED and ALARM lamps on the AC CONT panel are lit.
△ Operation 2:	Turn the key switch on. The TC and MF are powered on in that order.
□ Check 5:	Make sure that the LED lamp on the AC CONT panel reads 0 x 108.

This completes the procedure for turning the power on.

0x000:	Waiting status for the key switch to be turned on.
0x100:	Waiting status for the key switch to be turned on.
0x101:	The power supply to the TC is turned on.
0x102:	When the ALARM lamp on the AC CONT panel is lit, only the TC is turned on, with the system waiting for a ready signal from the ENGINE. When the ALARM lamp on the AC CONT panel is off, both TC and MF are turned on, with the system waiting for a ready signal from ENGINE.
0x103:	When the ALARM lamp on the AC CONT panel is lit, only the TC is turned on, with the system waiting for a ready signal from TC. (ready from the ENGINE passed the diagnosis.) When the ALARM lamp on the AC CONT panel is off, both TC and MF are turned on, with the system waiting for a ready signal from TC. (ready from the ENGINE passed the diagnosis.)
0x104:	When the ALARM lamp on the AC CONT panel is lit, only the TC is turned on, and a ready signal from both TC and the ENGINE both passed the diagnosis. When the ALARM lamp on the AC CONT panel is off, both TC and MF are turned on, and ready from TC and ready from the ENGINE both passed the diagnosis.
0x106:	The AC CONT panel may be faulty.
0x107:	Only the TC is turned on.
0x108:	Both TC and MF are powered on.

(2) Power Off Procedure

△ Operation 1: Shut down the TC.

□ Check 1: Make sure that the shutdown operation is completed.

△ Operation 2: Turn the key switch off. The MF and TC are turned off in that order.

□ Check 2: Make sure that the STATUS display changes to 0x100 and that the fans stops (30 seconds later).

△ Operation 3: Press the EMO switch to turn the main power supply off.

This completes the procedure for turning the power off.

2.3 Resetting the EMO Switch

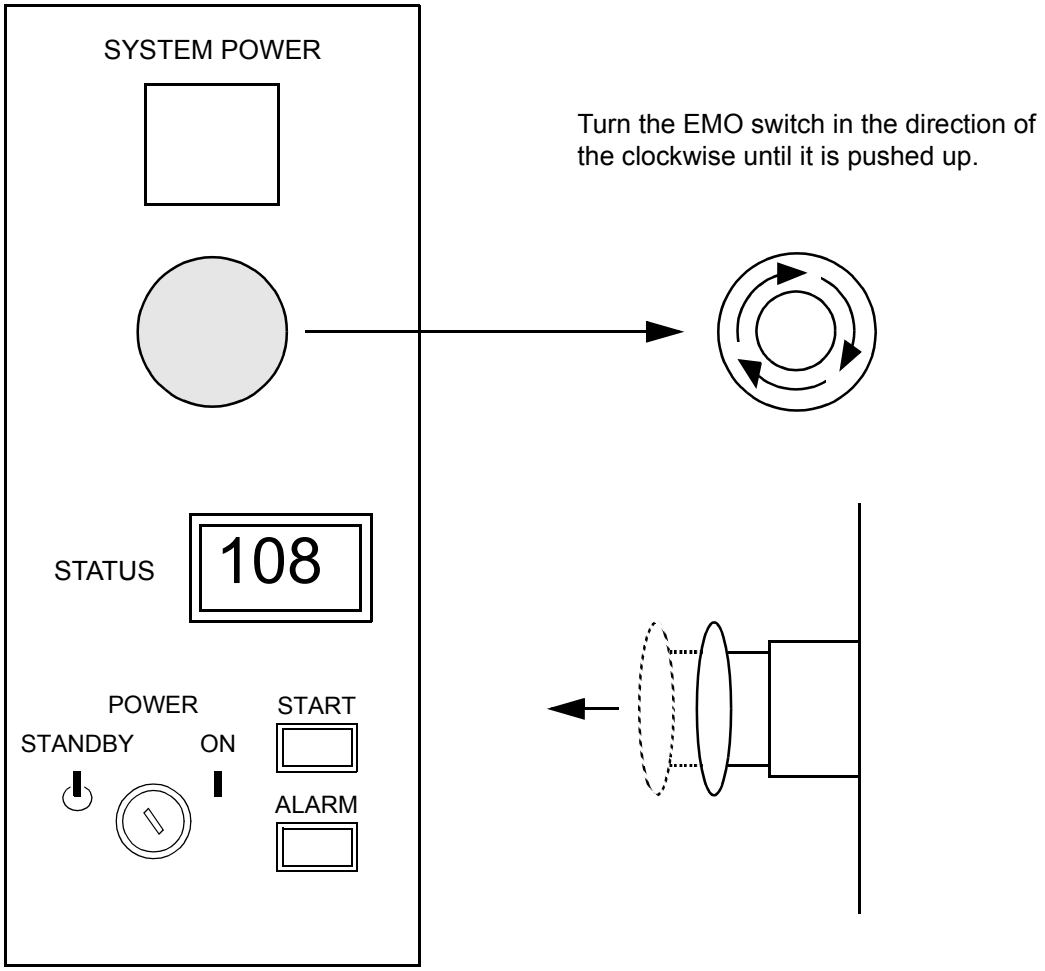

2.4 System Maintenance

To perform a system diagnosis, follow the procedure below.

1. Diagnosis (initialization)
2. Calibration

2.4.1 Diagnosis

Perform diagnosis as described below.

(1) Periodic inspection

The should be checked periodically to make sure its performance has not degraded.

(2) Board Replacement

Check the new board to see that it operates normally.

For details on how to perform this check, refer to each diagnose manual.

2.4.2 Initialization

In diagnose sessions, the initialization data required for tester operation is generated. You can perform an initialization only. Since this data is not retained after tester startup, always be sure to perform diagnosis, initialization, or initialization recovery. The initialization data is specific to each board, so there is no need to save it during periodic inspection.

For details on how to perform the above, refer to the “Initialization/calibration Operating Procedure (8350438).”

2.4.3 Calibration

Perform calibration as described below.

(1) Long-term periodic inspection

To prevent the tester’s performance degradation due to changes with the passage of time, perform calibration along with diagnosis. Be sure to save the calibration data during this calibration.

(2) Calibration at board replacement

When the PC (pin card) card, the HIFIX and the stick board has been replaced, the tester needs to be calibrated.

For details on how to perform the above, refer to the “Initialization/calibration Operating Procedure (8350438).”

* HSCLK option
  If the HSCLK_CONTACT board has been replaced, the HSCLK needs to be calibrated.
  For details on the calibration method, refer to "High speed clock option TIMING CALIBRATION OPERATING PROCEDURE (8700070)".

2.5 Using the Tester after Installation, Inspection, and Board Replacements

2.5.1 After Installation/System Calibrations

Follow the procedure shown below.

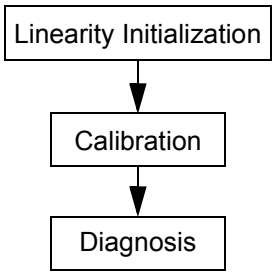

2.5.2 After Periodic Inspections

Execute the diagnostic program.

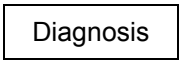

2.5.3 After Board Replacements

Use one of the following procedures (1), (2) and (3) depending on the board type.

(1) When the boards listed in Table 2-1 have been replaced, perform the work using the following procedure.

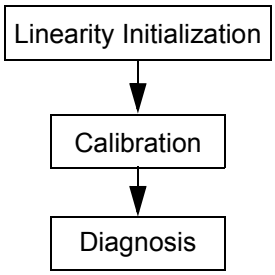

Table 2-1 Boards for the Procedure (1)

Unit Name	Slot No.	Board No.	Circuit Name
TH	4	BGR-025826	STICK (T6573)
		BGR-025826X02	STICK (T6563)
		BGR-025826X03	STICK (T6533)
TH	7, 8, 9, 10, 11, 12, 13, 14	BMS-025853	PC (16 MW)
		BMS-025853X02	PC (64 MW)
TH	16	BIR-026338	DCAP (16 MW)
		BIR-026338X02	DCAP (64 MW)
		BIS-029368	DCAP_AFM (16 MW)
TH	1	WUN-9V2R5V2BDM5VA	TH BPS1
TH	2	WUN-9V2R5V3V2R5V5VA	TH BPS2
TH	3	WUN-5V2R5V5V2R5V3VA	TH BPS3
TH	19	WUN-9V2R5V3V2R5V5VA	TH BPS4
TH	20	WUN-9V5V2B2R5V2BA	TH BPS5

(2) When the boards listed in Table 2-2 have been replaced, perform the work using the following procedure.

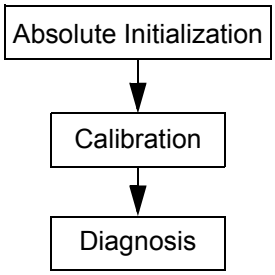

Table 2-2 Boards for the Procedure (2)

Unit Name	Slot No.	Board No.	Circuit Name
HIFIX		H3-93806	512 ch HIFIX
HIFIX		H3-94021	512+AV HIFIX
HIFIX		H3-93851	512 ZIF HIFIX
HIFIX		H3-93849	256 HV HIFIX
HIFIX		H7-1138	512 SQ HIFIX

(3) When the boards listed in Table 2-3 have been replaced, perform the work using the following procedure.

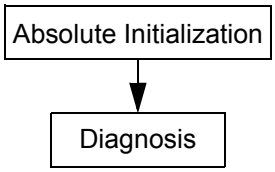

Table 2-3 Boards for the Procedure (3)

Unit Name	Slot No.	Board No.	Circuit Name
DPU	11	BGR-026245	DPU IF
DPU	12	BGR-023713X02	UDC
DPU	13	BGR-023712	UDC CONT
DPU	16, 17, 18, 19	BGR-023711X02	MDC
DPU	1	WUN-11V2B15V2B18V	DPU BPS1
DPU	2	WUN-11V2B5V2B3V	DPU BPS2
THPS	UPS12	DPS-001649	THPS 11.5 V
THPS	UPS13	DPS-001742	THPS -8 V
TH	15	WUN-T6500IDDQ	IDDQ
TH	17	BIS-026339	AD/DA (1M Sampling)
		BIS-026339X02	AD/DA (500k Sampling)

(4) When a board not listed in Table 2-1, Table 2-2 and Table 2-3 or the power supply has been replaced, perform the work using the following procedure.

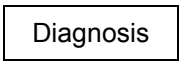

2.5.4 After Board Installation or Removal

After a board has been installed or removed from the DPU or TH unit, follow the procedure shown below.

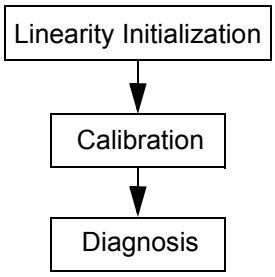

Make sure that the above procedure has been performed. While any boards you have installed or removed may not affect system's measurement accuracy, they may still affect temperatures of other boards in the rack.

3. MAINTENANCE OPERATION

CAUTION

The fault repairs described in this and following chapters can only be performed by those who have taken lectures in the ADVANTEST maintenance courses, and should not be attempted by anyone else.

When performing maintenance on the test system, put up a warning tag on the AC control panel indicating that the tester should not be operated to prevent the power from being inadvertently turned on.

Be sure to lock the breaker using a podlock.

The procedure for putting up a warning tag and locking out the system are detailed in paragraph (4) of Chapter 3, "BASIC PRECAUTIONS," in the "IC TEST SYSTEM SAFE HANDLING GUIDE."

Board replacement Precautions

Always turn the power supply off and make sure that the fan has stopped before attempting to replace boards (Before actually replacing the board, read Section 3.7, "When System Does Not Start Properly")
If the board has a cable attached at the top, detach the cable, remove the board from the tester and then insert the new board.

When replacing the system monitor, monitor interface, or TC unit, turn the key switch off and then press the EMERGENCY OFF switch to turn the main power off.

3.1 Hot Work

Hot work refers to performing system calibration or maintenance while the power to the test system is turned on. The following categories are used to describe the situation such work is performed under. Hot work classification is indicated in each maintenance or calibration procedure. For categories 3 to 5, there is a danger of receiving an electric shock during work, so please use caution under these circumstances.

Type 1: No power is being applied to the unit at all.

Type 2: Although the power to the unit is turned on, there is no possibility of touching current-conducting parts.

Type 3: The power to the unit is on and there is a possibility of touching current-conducting parts. The voltage present at these locations is 30 rmsV, 42.2 peakV, 240 VA or less.

Type 4: The power to the unit is on and there is a possibility of touching current-conducting parts. The voltage present at these locations is 30 rmsV, 42.2 peakV, 240 VA or more or RF energy exists.

Type 5: The power to the unit is on and it is necessary that a person puts a part of his body in the frame.

3.2 Periodic Inspection Items

CAUTION

Maintenance procedures should only be used by persons who have received maintenance training at an authorized technical training center.

To prevent the test system power from being turned on accidentally, a warning tag saying, "Maintenance service is under way. The test system is not available" must be attached to the AC control panel before starting any maintenance inside the test system.

Make sure that the circuit breaker is locked with a padlock.

For information on how to lock and tag a circuit breaker, refer to paragraph (4) in Chapter 3, "Basic Precautions" of "IC Test System Safe Handling Guide."

(1) Periodic inspections are necessary to maintain the performance of the test system. Periodic inspection items are listed in Table 3-1.

(2) Reed relays are used within STICK of the test station. Lifetime of the reed relays is approximately 3 x 10^8 (at no load). Therefore, reed relays, which have opened and closed approximately 3 x10^8 times, should be replaced.

(3) For a test station, the following air source is required to remove or mount a performance board by using air.

Air source: 0.49 MPa to 0.69 MPa dry air
Air consumption: 5 Nl/min to 10 Nl/min

If the drain pipe is filled with moisture and oil contained in air, place a cloth around the drain outlet to prevent them from adhering to electrical components (boards, cables, and other) at the bottom of the test station, then drain the moisture and oil.

Table 3-1 Periodic Inspection Items

Item	Weekly inspection	Monthly inspection	Semi-annual inspection	Annual inspection	Remarks
Diagnostics by using diagnostic program	○	○	○	○	
Operation check of cooling fans in test system		○	○	○	
Cleaning mainframe air filters			○	○	
Cleaning test head air filters			○	○	Refer to Note 1.
Timing calibration			○	○	Refer to Note 2.
10-MHz-reference oscillator operation check (recommended)			○	○	
Dropping point of grease on mainframe casters			○	○	
DVM (R6581T) external calibration					Refer to Note 3.

Note 1: Resin-made air filters may deteriorate faster depending on the environment they are used in.
If they are found deteriorated during cleaning, replace with new ones.

Note 2: The calibration file, which was created more than 6 months previously, must be re-created.
For more information, refer to "Timing Calibration Reference Manual."

Note 3: Perform this calibration within 8 years after the test system is installed. Perform this calibration every 10 years after the first calibration.

◯ Board unit air filter

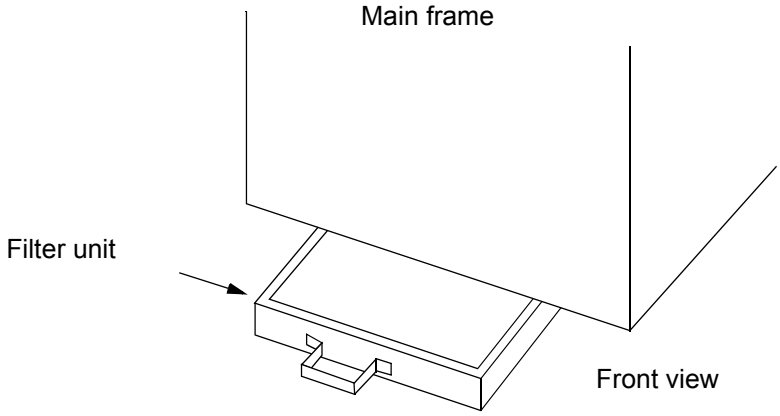

Remove the air filter from the unit and clean it using a vacuum cleaner.

3.3 Replacing the Fan Block (Hot Work Type 1)

WARNING

Turn off the AC control panel breaker from which power is fed and make sure that the fans have completely stopped. Before you start work, lock out the breaker and put a warning tag. For details about lock-out and tag-out procedures, refer to paragraph (4) of Chapter 3, "BASIC PRECAUTIONS," in the "IC TEST SYSTEM SAFE HANDLING GUIDE."

If you used the power-on key switch to shut off the system's power supply, note that the fan will continue to run for about 30 seconds after the switch has been turned off.

3.3.1 Replacing the Fan Block for the Unit Power Supply

(1) Remove all cables connecting to the fan block.

(2) Unfasten four screws on the front of the fan block (① in Figure 3-1).

(3) Pull the fan block toward you to remove it.

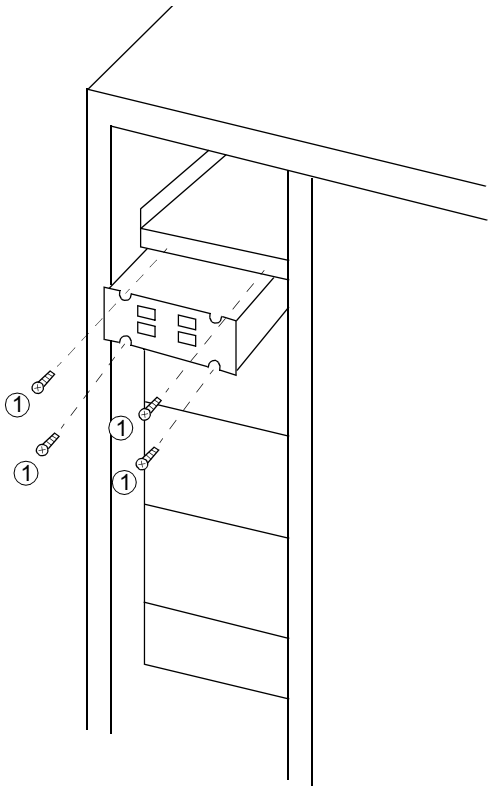

Figure 3-1 Removing the Fan Block for the Unit Power Supply

3.3.2 Replacing the Fan Block for the Unit

(1) Remove all cables connected to the fan block.

(2) Unfasten screws of the fan block (① in Figure 3-2 or Figure 3-3).

(3) Pull out the fan block toward you.

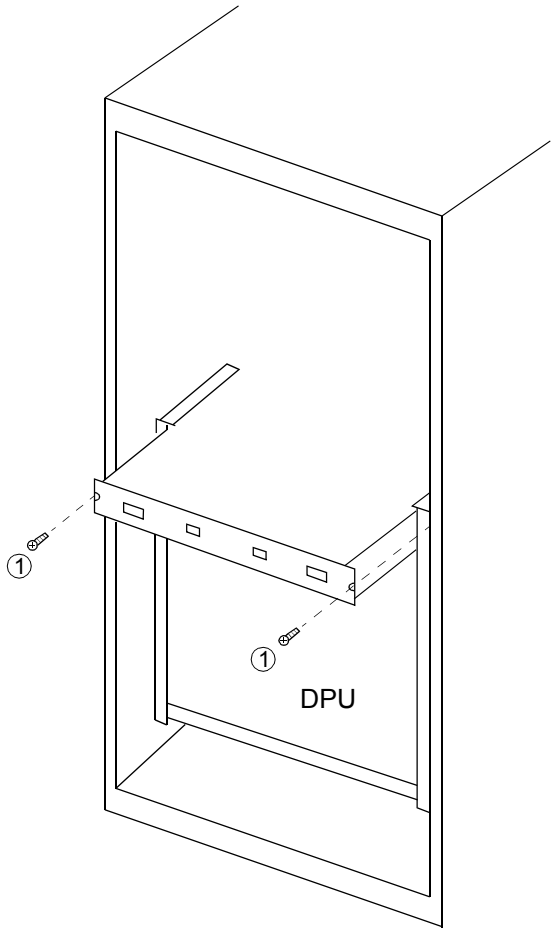

Figure 3-2 Removing the Fan Block for the DPU Unit

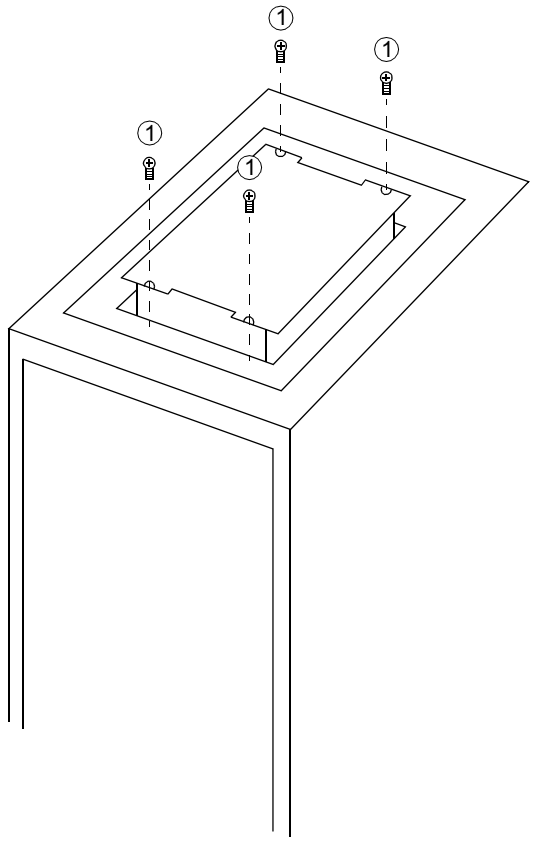

Figure 3-3 Removing the Fan Block for the Main frame

3.4 Replacing the Unit Power Supply

CAUTION

Turn off the AC control panel breaker from which power is fed and make sure that no current is flowing on the AC input side of the unit power supply. Before you start work, lock out the breaker and put up a warning tag. For details about lock-out and tag-out procedures, refer to paragraph (4) of Chapter 3, "BASIC PRECAUTIONS," in the "IC TEST SYSTEM SAFE HANDLING GUIDE."

For power supply layout and power supply standards, refer to Chapter 6., "UNIT, POWER SUPPLY LAYOUT, AND VOLTAGE SPECIFICATION."

3.4.1 Procedure for Removing the Unit Power Supply (Hot Work Type 1)

(1) Remove all cables connected to the unit power supply.

(2) Remove the four screws on the front of the unit power supply (① in Figure 3-4).

(3) Pull the unit power supply toward you to remove it.

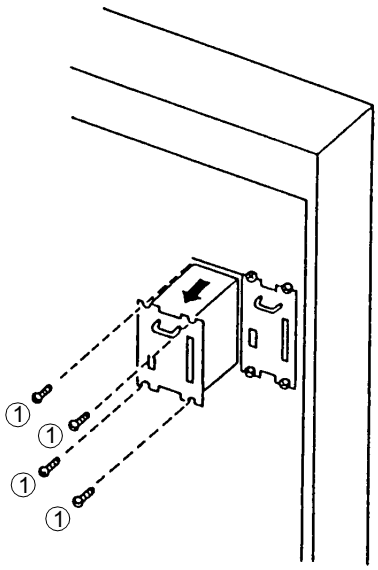

Figure 3-4 Removing the Unit Power Supply

3.4.2 Precautions to Be Taken When Installing the Unit Power Supply

Each cable has a cable marker which has the location number.

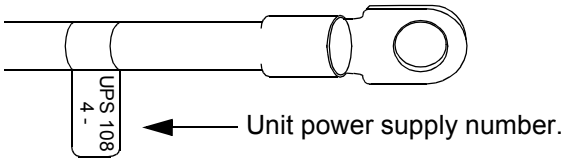

Figure 3-5 Marker on A Cable

Connect the cable with its terminal number marked with “+” to the “+” output terminal of the unit power supply and one marked with “-” to the “-” output terminal of the unit power supply. For power supply terminal numbers, see Figure 3-6 through Figure 3-8.

(1) AC-DC Power supply

WBL-PS3750W

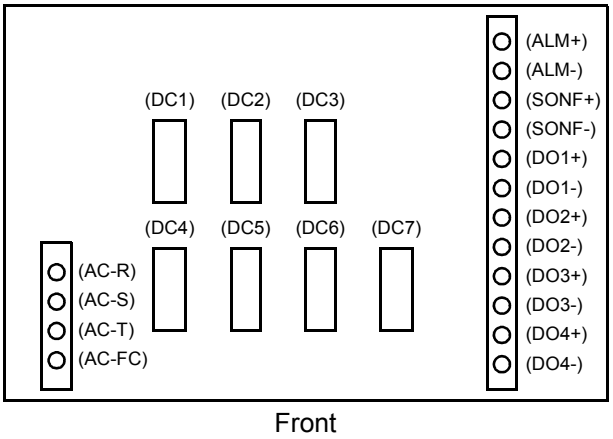

Figure 3-6 Terminal Numbers on Unit Power Supply (1)

(2) DC Power supply

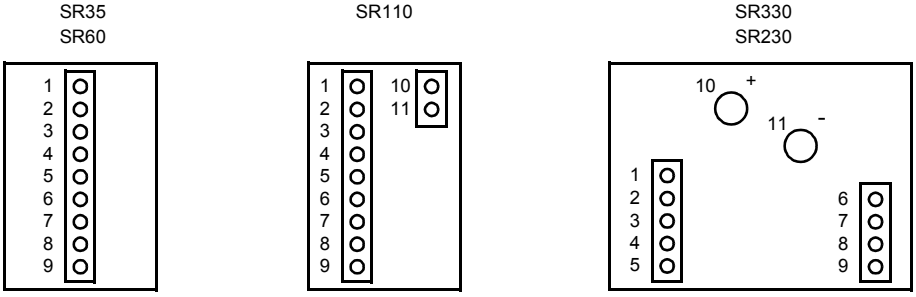

Figure 3-7 Terminal Numbers on Unit Power Supply (2)

(3) Power Supply for boards

WBL-PSXXXX

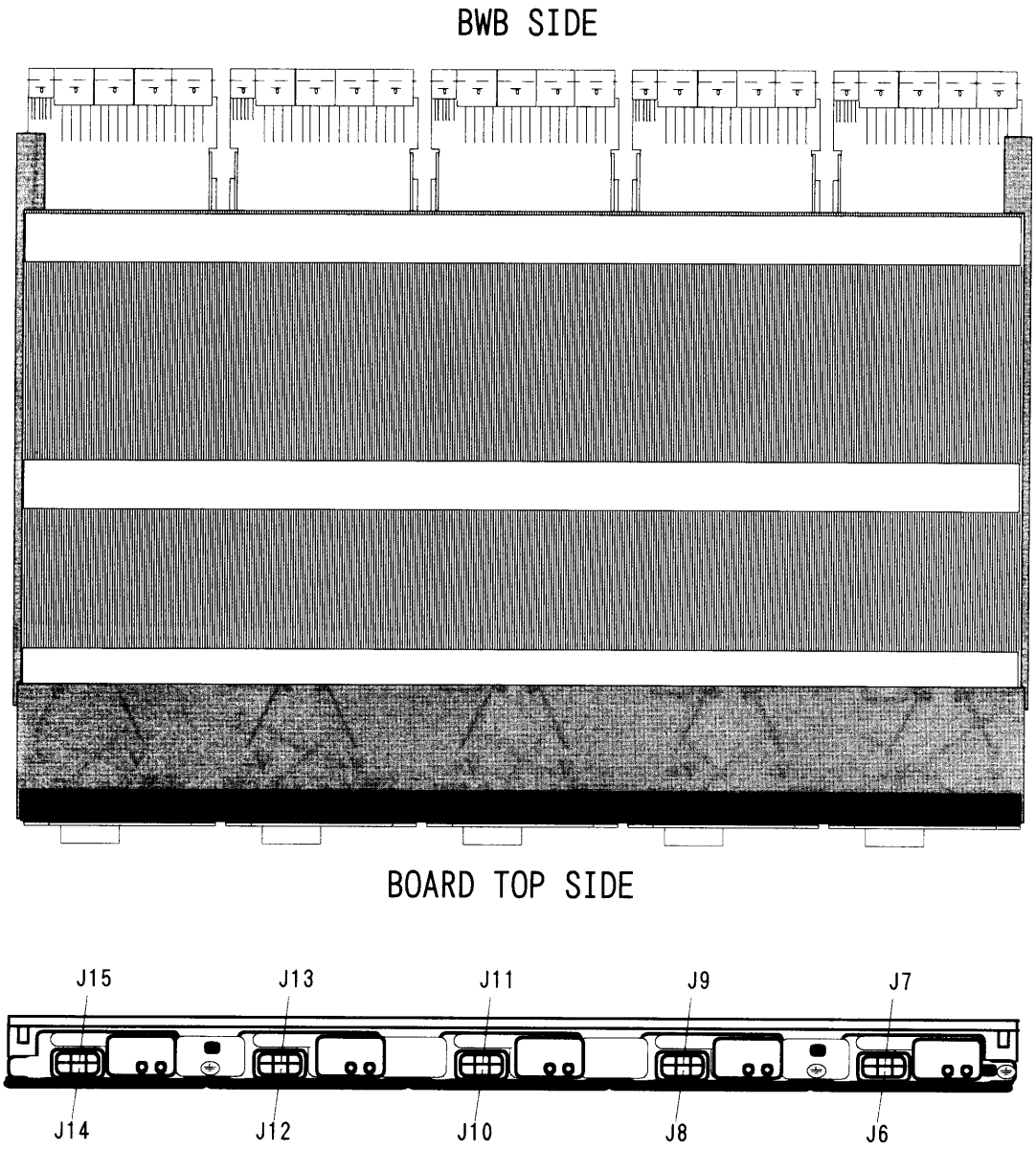

Figure 3-8 Terminal Numbers on Unit Power Supply (3)

3.5 Precautions to Be Taken when Replacing AC Power Supply (AC CONT)

When removing or attaching the AC power supply (AC CONT) for fault or other reasons, make sure it is handled by at least two people.

3.6 Opening/Closing the Frame Panel

(1) Make sure that there are hexagonal wrench keys at the top and bottom of the frame panel.

(2) Insert a 6 mm hexagonal wrench into the panel key and turn it counterclockwise to open the panel to the front.

(3) Push the panel's hinge lever downward. The hinge shaft lowers and comes off from the hinge holder.

(4) Lift the panel to remove the hinge shaft from the hinge holder. In this way, the panel can be completely removed from the frame.

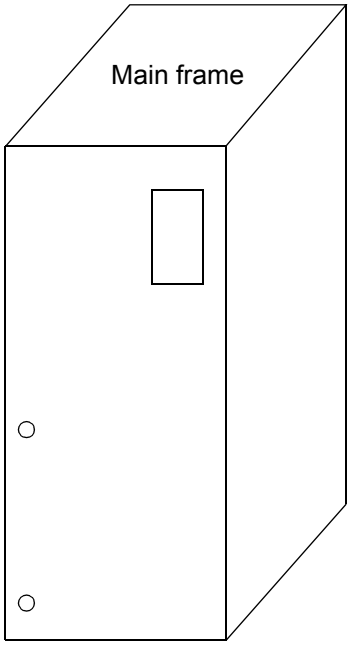

Table 3-4 MODE SELECT SW Code

Mode selection code	Explanation
0×00	Normal mode
0×D0	System monitor self-diagnosis
0×D1	Monitor I/F communication diagnosis
0×D2	TC communication diagnosis
0×D3	System type indication
0×F0 to 0×F3	Debug mode
0×FE	ROM monitor
Others	Unused

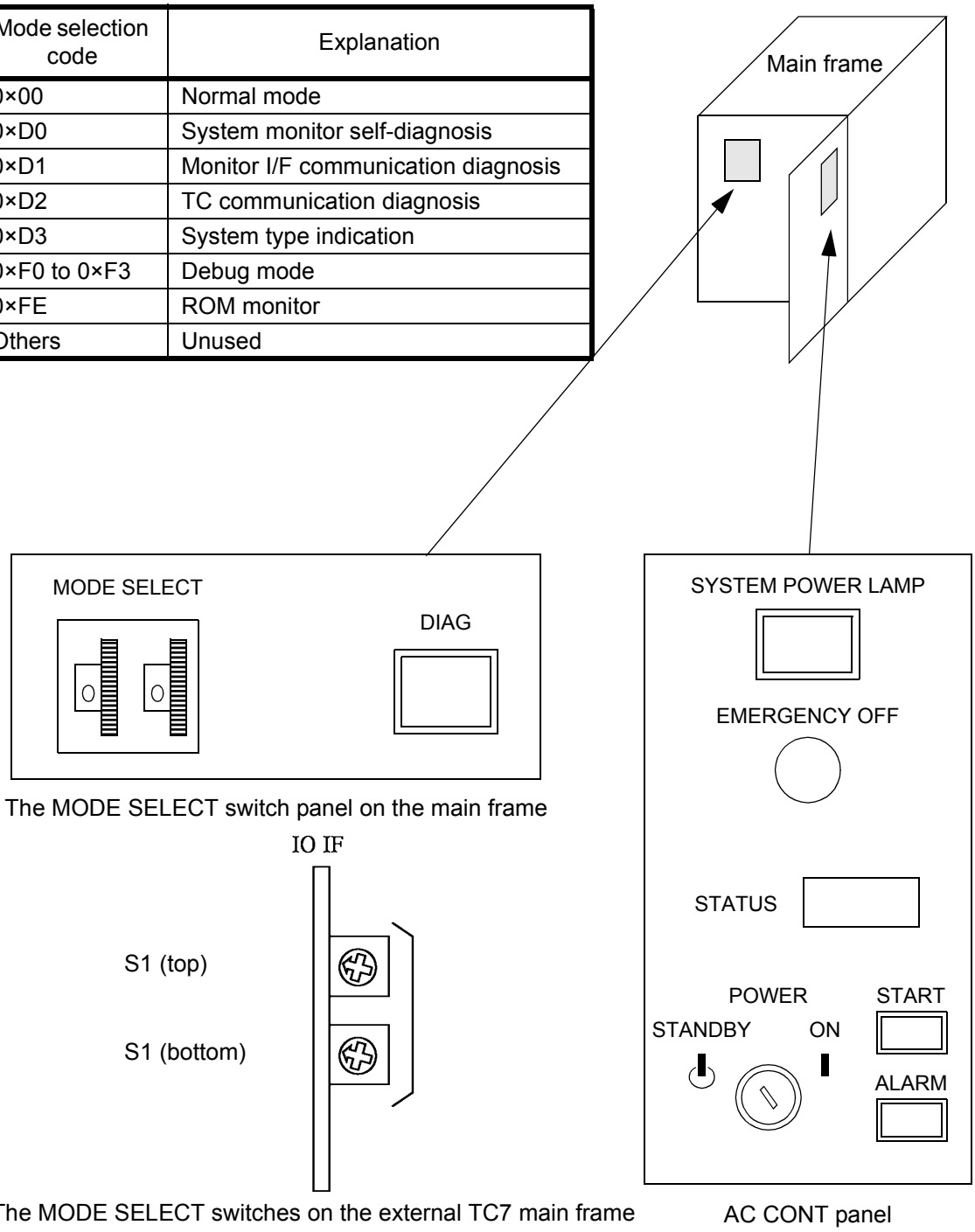

Figure 3-9 AC CONT Panel and MODE SELECT Switch Panel

TC7 CPU UNIT switch

The SW1 switch on the front of the TC7 CPU UNIT controls the CPU power supply in the CPU unit and is used to recover the system if the system is shut down by the init 5 command.

CAUTION

If the switch is pressed while the system is on, the CPU power supply is turned off and the EWS IF fatal voltage error (error code: 0x704) occurs.

To recover the system, follow the procedure described in "3.7.3 Recovering the System from the Shutdown by the init5 Command."

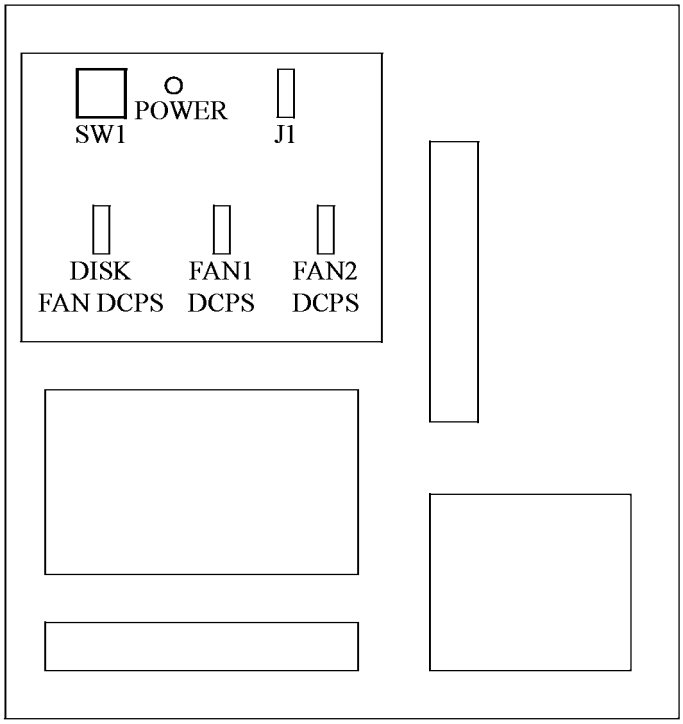

Figure 3-10 TC7 CPU UNIT

3.7 When System Does Not Start Properly

Follow Table 3-10, “Relationship between the STATUS Codes and Suggested Actions.”

- Normal mode: Monitoring the system operation. When a fault is found, the power supply is turned off.
- Debug mode: Monitoring the system operation, except for system monitor.

3.7.1 When the System Monitor Does Not Start

(1) When the power to the system monitor does not turn on

□ Check 1: The power supply is turned off after you release the START switch.

▲ Action 1: Check the pilot lamps to see that all breakers are turned on.

(2) When the power to the system monitor turns on

□ Check 1: Check the STATUS code on the AC CONT panel that was displayed last time. (See Table 3-10)

(3) When the power turns off before checking STATUS code

□ Check 1: Make sure that the power to the system monitor is off. If not, press the EMO (EMERGENCY OFF) switch to turn the power to the system monitor off.

△ Operation 1: Turn the key switch on the AC CONT panel off.

△ Operation 2: Set MODE SELECT to 0xF0. (Debug mode)

△ Operation 3: Press the START switch on the AC CONT panel.

□ Check 2: Check the STATUS code on the AC CONT panel. (See Table 3-10.) Leave the key switch on the AC CONT panel turned off. If the key switch is turned on, a system error may occur.

(4) Reset Method

△ Operation 1: Press the EMO (EMERGENCY OFF) switch to turn the power to the system monitor off.

△ Operation 2: Set MODE SELECT to 0x00. (Normal mode)

△ Operation 3: Press the START switch on the AC CONT panel.

Thus, the power to the system monitor is turned on.

3.7.2 Checking FATAL ERROR

(1) When the LED lamp is on

△ Operation 1: Turn the key switch on the AC CONT panel off.

□ Check 1: Check the LED code on the AC CONT panel. (See Table 3-10.)

(2) When the LED lamp is off

△ Operation 1: Turn the key switch on the AC CONT panel off.

△ Operation 2: Press the START switch on the AC CONT panel.

□ Check 1: Make sure that the ALARM lamp on the AC CONT panel is on. If the power immediately turns off even when the lamp is lit, refer to Section 3.7.1, “When the System Monitor Does Not Start.”

□ Check 2: Check the STATUS code on the AC CONT panel. (Table 3-5)

3.7.3 Recovering the System from the Shutdown by the init5 Command

If the system is shut down by executing the init5 command (which turns off the CPU power supply after the system is shut down), the CPU power supply in the CPU UNIT turns off and the EWS IF fatal voltage error (error code: 0x704) occurs in the TC7 CPU UNIT.

If this error occurs, use the following procedure to recover the test system.

(1) Recovery procedure (by using the CPU UNIT SW1)

△ Operation 1: Turn off the key switch on the AC CONT panel.

△ Operation 2: Set MODE SELECT to 0xF0. (Debug mode)

△ Operation 3: Press the START switch on the AC CONT panel.

△ Operation 4: Set MODE SELECT to 0xF3. (Debug mode)

△ Operation 5: Turn on the key switch.

△ Operation 6: Press and hold the CPU UNIT SW1 switch for approximately one second.

□ Check 1: Ensure that after approximately one minute and 30 seconds, the POWER indicator on the front of the CPU unit lights up green and the monitor screen is displayed.

△ Operation 7: After the system starts, shut it down by using a command such as the init0 (other than the init5) command.

△ Operation 8: Turn off the key switch.

△ Operation 9: Press the EMO (EMERGENCY OFF) switch.

△ Operation 10: Set MODE SELECT to 0x00. (Normal mode)

△ Operation 11: Press the START switch on the AC CONT panel.

3.8 Starting the System Monitor DIAG

When you want to diagnose the system which has already been started up and is operating, this software allows you to manually diagnose the system.

(1) System monitor self-diagnosis and Monitor I/F communication diagnosis

□ Check 1: Make sure that the STATUS on the AC CONT panel is one of the following.

0x000: During error display, with the system waiting for the key switch to be turned on (blinking)
0x100: Waiting for the key switch to be turned on
0x106: TC is on
0x107: TC is on
0x108: TC and MF are on

Note: Diagnosis is not executed unless in one of the above states.

△ Operation 1: Set the MODE SELECT switch as shown below.

0xD0: For System monitor self-diagnosis
0xD1: For Monitor I/F communication diagnosis

△ Operation 2: Press the DIAG switch.

□ Check 2: Check the STATUS on the AC CONT panel to see if the diagnosis passed or failed. (See the description below.)

When passed: The diagnosis item is displayed on the STATUS for 2 seconds, 0x000 is displayed for 2 seconds, and then the diagnosis item is displayed for another 2 seconds.

When failed: The diagnosis item is displayed on the STATUS for 2 seconds, 0xEEE is displayed for 2 seconds, and then the diagnosis item is displayed for another 2 seconds. (See Table 3-6 and Table 3-7.)

Table 3-5 Relationship between LEDs code and START DIAG

Refer to the codes listed below when checking the status

0x070	Initialization check on the system boards
0x071	Read/Write check of SMONI_SYS register
0x072	Read/Write check of SEMO_SEM3 register
0x073	Read/Write check of SMONI_INIT_LVL register
0x074	Increment check of SMONI_SYS register
0x075	Interrupt (MCOM0) check from TC, the ENGINE
0x076	Status check of AC OFF(MF, TC)
0x077	Status check of FATAL EROR Mask
0x078	Read/Write check of LEDs
0x079	Read/Write check of NVRAM
0x07A	Read/Write check of the memory
0x07F	Code when the START DIAG passed

Table 3-6 Relationship between STATUS Codes and System Monitor Self-diagnosis

Refer to the codes listed below when checking the status

0x0B1	Read/write check of SMONI_SYS register
0x0B2	Read/write check of SEMO_SEM3 register
0x0B3	Read/write check of SMONI_INT_LVL register
0x0B4	Increment check of SMONI_SYS register
0x0B5	Interrupt (MCOM0) check from TC, the ENGINE
0x0B6	(Undefined)
0x0B7	(Undefined)
0x0B8	Read/write check of LED
0x0B9	Read/write check of NVRAM
0x0BA	Read/write check of memory
0x0B0	Code when system monitor self-diagnosis passed

Table 3-7 Relationship between STATUS Codes and Monitor I/F Communication Diagnosis

Refer to the codes listed below when checking the status

0x0C1	Read check of NVRAM checksum
0x0C2	Online check of monitor I/F
0x0C0	When monitor I/F communication check is passed

Table 3-8 Relationship between STATUS Codes and TC Communication Diagnosis

Refer to the codes listed below when checking the status

0x0D1	Write of SMONI_TO_TC register and read of SMONI_TO_TC register READ
0x0D2	Write of SMONI_TO_TC register and read of SMONI_TO_TC register (inc data)
0x0D3	READ (inc data)
0x0D4	Read/write of SMONI_STS
0x0D5	Read/write of SMONI_STS (inc data)
0x0D6	Interrupt check
0x0D7	Interrupt check
0x0D8	Interrupt check
0x0D0	Interrupt check When TC communication diagnosis passed

Table 3-9 Relationship between STATUS Codes and Error Processing Sequence

Refer to the codes listed below when checking the status

0x0E1	System monitor error
0x0E2	When Fail_B error is notified from monitor I/F
	Smoke or temperature error, DIAG, +12 V (monitor I/F power supply).... If the TC4 is used.
	+5 V (monitor I/F power supply)..... If the TC7 is used.
0x0E3	When Fail_A error is notified from monitor I/F
	DC power supply, fan, or exhaust air temperature
0x0E4	TC ALARM1
	Fuse, temperature, TC main unit fan
0x0E5	TC ALARM2
	TC main unit fan power supply error
0x0E6	TC power fail
	The +5 V, -5.2 V, +12 V, or -12 V power supply used in TC is faulty ..... If the TC4 is used.
	The +5 V, -5.2 V, or -12 V power supply used in the TC is faulty ..... If the TC7 is used.
0x0E7	TINT0 error
0x0E8	Error MASK error
0x0E9	AC_CONT error
0x0EA	SYSTEM name error

3.9 System Monitor Error Codes

Table 3-10 Relationship between the STATUS Codes and Suggested Actions

0x000 - 0x00F	System monitor hard initialize	▲ Action 1
0x070 - 0x07F	Start diagnosis	▲ Action 2
0x080	Monitor I/F ONLINE check	▲ Action 3
0x08E	MODE SELECT switch failed	▲ Action 4
0x08F	Waiting for turning off the key switch	▲ Action 5
0x0B0 - 0x0BF	System monitor self-diagnosis	▲ Action 6
0x0C0 - 0x0CF	System monitor and monitor I/F communication diagnosis (only in the TC4)	▲ Action 7
0x0D0 - 0x0DF	System monitor and TC communication diagnosis (only in the TC4)	▲ Action 8
0x0E0 - 0x0EF	Type of error processing sequence	▲ Action 9
0x0F0	ROM monitor system monitor mode	▲ Action 10
0x100 - 0x108	Normal mode ON sequence	▲ Action 11
0x600 - 0x6FF	Error code	▲ Action 12
0x700 - 0x7FF	Error code	▲ Action 13
0x800 - 0x8FF	Error code	▲ Action 14
0x900 - 0x9FF	Error code	▲ Action 15
0xA00 - 0xAFF	Error code	▲ Action 16
0xB00 - 0xBFF	Error code	▲ Action 17
0xC00 - 0xCFF	Error code	▲ Action 18
0xD00 - 0xDFF	Error code	▲ Action 19

Corrective action procedure

▲ Action 1 Hard initializing the system monitor. If the STATUS code does not change after waiting for 10 seconds or more, some board in the system monitor may be faulty.

▲ Action 2 Performing Start diagnosis. If an error is encountered, the diagnosis item in error (Table 3-3) is displayed on the STATUS (Note 1) and start diagnosis is executed repeatedly.

▲ Action 3 Performing Monitor I/F ONLINE check. If the STATUS code does not change after waiting for 30 seconds or more, some board in the system monitor may be faulty.

▲ Action 4 The MODE SELECT switch is set to any value other than 0x00. After setting the MODE SELECT switch to 0x00, temporarily turn the key switch off. Then turn it back on again.

▲ Action 5 The key switch had already been turned on before you turned the power to the system on. Temporarily turn the key switch off and turn it back on again.

▲ Action 6 Performing System monitor self-diagnosis. When the diagnosis is completed, PASS or FAIL is displayed on the STATUS (Note 2) before returning to normal operation.

▲ Action 7 Performing System monitor and monitor I/F communication diagnosis. When the diagnosis is completed, PASS or FAIL is displayed on the STATUS (Note 2) before returning to normal operation (only in the TC4).

▲ Action 8 Performing System monitor and TC communication diagnosis. When the diagnosis is completed, PASS or FAIL is displayed on the STATUS (Note 2) before normal operation is restored.

▲ Action 9 Performing the Error processing sequence. If the STATUS code does not change after waiting for 10 seconds or more, some board in the system monitor may be faulty.

▲ Action 10 Placed in ROM monitor mode. The MODE SELECT switch is set to any value other than 0x00. After setting the MODE SELECT switch to 0x00, press the EMO (EMERGENCY OFF) switch to temporarily turn off the power to the system monitor.

▲ Action 11 Refer to the codes listed below when checking the status.

0x000: Waiting for the key switch to be turned on.
0x100: Waiting for the key switch to be turned on.
0x101: The power to the TC is turned on.
0x108: Both TC and MF are powered on.

▲ Action 12-19 Refer to the codes listed below when checking the status.

For the TC4

0x601: AC CONT status error when the MF was turned off
0x602: AC CONT status error when the MF was turned on
0x610: AC CONT status error when the TC was turned off
0x620: AC CONT status error when the TC was turned on
0x680: AC cycle-omitted occurred
0x701: TINT0 error
0x702: Breaker CB4 of TC4 turned off (SLOT7-4: TC4)
0x704: Breaker CB2 of TC4 turned off (SLOT11: 1’st GPIB-VME)
0x708: Breaker CB1 of TC4 turned off (SLOT15-13: TC4)
0x710/0x008: Breaker CB3 of TC4 turned off (SLOT9: 2’nd GPIB-VME)
0x710/0x040: Onboard fuse of SLOT12 TC4 BUS I/F burned.
0x710/0x040: +5V onboard fuse of SLOT3 TC4 TBUS I/F burned.
0x710/0x040: +3.3V onboard fuse of SLOT3 TC4 BUS I/F burned.
0x720: TC fan error
0x740: TC temperature error
0x780: TC smoke error
0x801: Monitor I/F communication error
0x802: System monitor’s MASK ENABLE/DISABLE error

0x804: System name error
0x810: TC -12 V error
0x820: TC +12 V error
0x840: TC VEE (-5 V) error
0x880: TC VCC (+5 V) error

0x9XX:	XX denotes the unit ID when error occurred	See Section 3.10.
0xA01:	MF fan error	
0xA02:	MF temperature error	
0xA04:	MF smoke error	
0xA80:	Monitor I/F self-diagnosis error	
0xB01:	Monitor I/F DC power supply error	
0xB02:	Monitor I/F DC REFERENCE error	
0xCXX:	XX denotes the location in MF where DC error occurred	
0xDXX:	XX denotes the location in MF where DC error occurred	

For the TC7

0x601:	AC CONT status error when the MF was turned off
0x602:	AC CONT status error when the MF was turned on
0x610:	AC CONT status error when the TC was turned off
0x620:	AC CONT status error when the TC was turned on
0x680:	AC cycle-omitted occurred
0x702/0x000/0x000:	TC6 Option IF voltage error
0x704/0x000/0x000:	TC6 EWS IF voltage error (includes a CPU AC error and interface cable problem)
0x708/0x000/0x000:	TC6 IOIF voltage error
0x710/0x001/0x000:	+12 V SENSE Error
0x710/0x002/0x000:	-12 V SENSE Error
0x710/0x004/0x000:	FAN SENSE Error
0x710/0x008/0x000:	TC6 IO Option SENSE Error
0x720:	TC fan error
0x801:	Monitor I/F communication error
0x802:	System monitor's MASK ENABLE/DISABLE error
0x804:	System name error
0x810:	TC7 -12 V DC error
0x820:	TC7 +12 V DC error
0x840:	TC7 -5.2 V DC error
0x880:	TC7 +5 V DC error

0x9XX:	XX denotes the unit ID when error occurred	See Section 3.10.
0xA01:	MF fan error	
0xA02:	MF temperature error	
0xA04:	MF smoke error	
0xA80:	Monitor I/F self-diagnosis error	
0xB01:	Monitor I/F DC power supply error	
0xB02:	Monitor I/F DC REFERENCE error	

0xCXX:	XX denotes the location in MF where DC error occurred
0xDXX:	XX denotes the location in MF where DC error occurred

3.10 Monitor Interface Error Codes

Table 3-11 Monitor Interface Error Code(TC4)

UNIT	ERROR CODE	A01	A02	A04	A20	A80	C01	C02	C04	C08	C10	C20	C40	C80	D01	D02	D04	D08	D10	D20	D40	D80
NC	900	–	–	–	–	DIAG MONI I/F-5 V	(J1-L)	(J1-L)	(J1-L)	(J1-L)	(J1-L)	(J1-L)	(J1-L)	(J1-L)	–	–	–	–	–	–	–	–
MF	901	(J35) FAN	(J35) TEMP	(J35) SMOKE	(J35) AUX	DIAG MONI I/F-5 V	(J1-U)	(J1-U)	(J1-U)	(J1-U)	(J1-U)	(J1-U)	(J1-U)	(J1-U)	–	–	–	–	–	–	–	–
NC	902	(J34) AUX	(J34) AUX	(J34) AUX	(J34) AUX	DIAG MONI I/F-5 V	(J2-L)	(J2-L)	(J2-L)	(J2-L)	(J2-L)	(J2-L)	(J2-L)	(J2-L)	(J2-L)	(J2-L)	(J2-L)	(J2-L)	(J2-L)	(J2-L)	(J2-L)	(J2-L)
DPU	903	(J28) AUX	–	–	–	DIAG MONI I/F-5 V	(J2-U) -60 V	(J2-U) -15 V	(J2-U) -12 V	(J2-U) -5.2 V	(J2-U) 3.3 V	(J2-U) 5 V	(J2-U) 12 V	(J2-U) 15 V	(J2-U) 17 V	(J2-U) 60 V	(J2-U)	(J2-U)	(J2-U)	(J29) HEAT	(J2-U)	(J40) AIR 24 V
NC	904	(J27) AUX	–	–	–	DIAG MONI I/F-5 V	(J3-L)	(J3-L)	(J3-L)	(J3-L)	(J3-L)	(J3-L)	(J3-L)	(J3-L)	–	–	–	–	–	–	–	–
NC	905	(J26) AUX	–	–	–	DIAG MONI I/F-5 V	(J3-U)	(J3-U)	(J3-U)	(J3-U)	(J3-U)	(J3-U)	(J3-U)	(J3-U)	–	–	–	–	–	–	–	–
NC	906	(J25) AUX	–	–	–	DIAG MONI I/F-5 V	(J4-L)	(J4-L)	(J4-L)	(J4-L)	(J4-L)	(J4-L)	(J4-L)	(J4-L)	–	–	–	–	–	–	–	–
NC	907	(J24) AUX	–	–	–	DIAG MONI I/F-5 V	(J4-U)	(J4-U)	(J4-U)	(J4-U)	(J4-U)	(J4-U)	(J4-U)	(J4-U)	–	–	–	–	–	–	–	–
NC	908	(J23) AUX	–	–	–	DIAG MONI I/F-5 V	(J5-L)	(J5-L)	(J5-L)	(J5-L)	(J5-L)	(J5-L)	(J5-L)	(J5-L)	–	–	–	–	–	–	–	–
NC	909	(J22) AUX	–	–	–	DIAG MONI I/F-5 V	(J5-U)	(J5-U)	(J5-U)	(J5-U)	(J5-U)	(J5-U)	(J5-U)	(J5-U)	–	–	–	–	–	–	–	–
NC	90A	(J21) AUX	(J21) AUX	(J21) AUX	(J21) AUX	DIAG MONI I/F-5 V	(J6-L)	(J6-L)	(J6-L)	(J6-L)	(J6-L)	(J6-L)	(J6-L)	(J6-L)	–	–	–	–	–	–	–	–
NC	90B	–	–	–	–	DIAG MONI I/F-5 V	(J6-U)	(J6-U)	(J6-U)	(J6-U)	(J6-U)	(J6-U)	(J6-U)	(J6-U)	–	–	–	–	–	–	–	–
NC	90C	(J30)	–	–	–	DIAG MONI I/F-5 V	(J7-L)	(J7-L)	(J7-L)	(J7-L)	(J7-L)	(J7-L)	(J7-L)	(J7-L)	(J7-L)	(J7-L)	(J7-L)	–	–	–	–	–
NC	90D	(J31)	–	–	–	DIAG MONI I/F-5 V	(J7-U)	(J7-U)	(J7-U)	(J7-U)	(J7-U)	(J7-U)	(J7-U)	(J7-U)	(J7-U)	(J7-U)	(J7-U)	–	–	–	–	–
TH1	90E	(J32) TH1 FAN	(J32) TH1 TEMP	–	(J32) TH1 BIE	DIAG MONI I/F-5 V	(J8-L) 15 V	(J8-L) 11.5 V	(J8-L) 9 V	(J8-L) 5 V	(J8-L) 3.3 V	(J8-L) 3.3 V [0.8V]	(J8-L) -2.5 V	(J8-L) -2.5 V [H]	(J8-L) -5 V	(J8-L) -5.2 V	(J8-L) -8 V	(J8-L) -15 V	(J8-L)	(J32)	(J8-L)	(J40) CPAN 24 V
NC	90F	(J33)	(J33)	–	(J33)	DIAG MONI I/F-5 V	(J8-U)	(J8-U)	(J8-U)	(J8-U)	(J8-U)	(J8-U)	(J8-U)	(J8-U)	(J8-U)	(J8-U)	(J8-U)	(J8-U)	(J8-U)	(J33)	(J8-U)	(J40) CPAN 24 V
SHUTDOWN		E	E	E	E	E	P	P	P	P	P	P	P	P	P	P	P	P	P	P	P	P

When the shutdown result is "P": Turn the KEY switch off.

Table 3-12 Monitor Interface Error Code(TC7)

UNIT	ERROR CODE	A01	A02	A04	A20	A80	C01	C02	C04	C08	C10	C20	C40	C80	D01	D02	D04	D08	D10	D20	D40	D80
NC	900	–	–	–	–	DIAG MONI I/F-5 V	(J1-L)	(J1-L)	(J1-L)	(J1-L)	(J1-L)	(J1-L)	(J1-L)	(J1-L)	–	–	–	–	–	–	–	–
MF TC7	901	(J35) FAN	(J35) TEMP	(J35) SMOKE	(J35) AUX	DIAG MONI I/F-5 V	(J1-U)	(J1-U)	(J1-U)	(J1-U)	(J1-U)	(J1-U)	(J1-U)	(J1-U)	–	–	–	–	–	–	–	–
NC	902	(J34) AUX	(J34) AUX	(J34) AUX	(J34) AUX	DIAG MONI I/F-5 V	(J2-L)	(J2-L)	(J2-L)	(J2-L)	(J2-L)	(J2-L)	(J2-L)	(J2-L)	(J2-L)	(J2-L)	(J2-L)	(J2-L)	(J2-L)	(J2-L)	(J2-L)	(J2-L)
DPU	903	(J28) AUX	–	–	–	DIAG MONI I/F-5 V	(J2-U) -60 V	(J2-U) -15 V	(J2-U) -12 V	(J2-U) -5.2 V	(J2-U) 3.3 V	(J2-U) 5 V	(J2-U) 12 V	(J2-U) 15 V	(J2-U) 17 V	(J2-U) 60 V	(J2-U)	(J2-U)	(J2-U)	(J29) HEAT	(J2-U)	(J40) AIR 24 V
NC	904	(J27) AUX	–	–	–	DIAG MONI I/F-5 V	(J3-L)	(J3-L)	(J3-L)	(J3-L)	(J3-L)	(J3-L)	(J3-L)	(J3-L)	–	–	–	–	–	–	–	–
NC	905	(J26) AUX	–	–	–	DIAG MONI I/F-5 V	(J3-U)	(J3-U)	(J3-U)	(J3-U)	(J3-U)	(J3-U)	(J3-U)	(J3-U)	–	–	–	–	–	–	–	–
NC	906	(J25) AUX	–	–	–	DIAG MONI I/F-5 V	(J4-L)	(J4-L)	(J4-L)	(J4-L)	(J4-L)	(J4-L)	(J4-L)	(J4-L)	–	–	–	–	–	–	–	–
NC	907	(J24) AUX	–	–	–	DIAG MONI I/F-5 V	(J4-U)	(J4-U)	(J4-U)	(J4-U)	(J4-U)	(J4-U)	(J4-U)	(J4-U)	–	–	–	–	–	–	–	–
NC	908	(J23) AUX	–	–	–	DIAG MONI I/F-5 V	(J5-L)	(J5-L)	(J5-L)	(J5-L)	(J5-L)	(J5-L)	(J5-L)	(J5-L)	–	–	–	–	–	–	–	–
NC	909	(J22) AUX	–	–	–	DIAG MONI I/F-5 V	(J5-U)	(J5-U)	(J5-U)	(J5-U)	(J5-U)	(J5-U)	(J5-U)	(J5-U)	–	–	–	–	–	–	–	–
NC	90A	(J21) AUX	(J21) AUX	(J21) AUX	(J21) AUX	DIAG MONI I/F-5 V	(J6-L)	(J6-L)	(J6-L)	(J6-L)	(J6-L)	(J6-L)	(J6-L)	(J6-L)	–	–	–	–	–	–	–	–
NC	90B	–	–	–	–	DIAG MONI I/F-5 V	(J6-U)	(J6-U)	(J6-U)	(J6-U)	(J6-U)	(J6-U)	(J6-U)	(J6-U)	–	–	–	–	–	–	–	–
NC	90C	(J30)	–	–	–	DIAG MONI I/F-5 V	(J7-L)	(J7-L)	(J7-L)	(J7-L)	(J7-L)	(J7-L)	(J7-L)	(J7-L)	(J7-L)	(J7-L)	(J7-L)	–	–	–	–	–
NC	90D	(J31)	–	–	–	DIAG MONI I/F-5 V	(J7-U)	(J7-U)	(J7-U)	(J7-U)	(J7-U)	(J7-U)	(J7-U)	(J7-U)	(J7-U)	(J7-U)	(J7-U)	–	–	–	–	–
TH1	90E	(J32) TH1 FAN	(J32) TH1 TEMP	–	(J32) TH1 BIE	DIAG MONI I/F-5 V	(J8-L) 15 V	(J8-L) 11.5 V	(J8-L) 9 V	(J8-L) 5 V	(J8-L) 3.3 V	(J8-L) 3.3 V [0.8V]	(J8-L) -2.5 V	(J8-L) -2.5 V [H]	(J8-L) -5 V	(J8-L) -5.2 V	(J8-L) -8 V	(J8-L) -15 V	(J8-L)	(J32)	(J8-L)	(J40) CPAN 24 V
NC	90F	(J33)	(J33)	–	(J33)	DIAG MONI I/F-5 V	(J8-U)	(J8-U)	(J8-U)	(J8-U)	(J8-U)	(J8-U)	(J8-U)	(J8-U)	(J8-U)	(J8-U)	(J8-U)	(J8-U)	(J8-U)	(J33)	(J8-U)	(J40) CPAN 24 V
SHUTDOWN		E	E	E	E	E	P	P	P	P	P	P	P	P	P	P	P	P	P	P	P	P

When the shutdown result is "P": Turn the KEY switch off.

Other codes

100 to 108	Power-on sequence
700 to 706	Power-off sequence
010 to 07F	System monitor start diagnosis
08E	Digital switch setup error
08F	Waiting for Key switch to turn off
0EX	Fail detection

000 or 100	Waiting for key switch to be turned on
101	TC powered on
102	MF powered on (normal mode) and wait time for ready flag from the Engine
103	Wait time for ready flag from TC
104 to 108	Powered on
106 to 108	Maintenance mode power-on sequence (SW1, SW2) MF: Power on/off

3.11 Replacing the TC4 System Monitor (Replacing the TC7 IO IF)

Set up the monitor I/F ID, date and time, and system type. Press the EMO (EMERGENCY OFF) switch to turn the power off.

Before the TC7 IO IF is replaced, turn off the main power by pressing the EMO switch (EMERGENCY OFF). None of the monitor I/F ID, date, time, system, and type settings are necessary when the board is replaced because they have been set before shipment. However, this section describes the setting procedures for reference.

3.11.1 Using ROM Monitor Board

(1) ROM monitor startup procedure

□ Check 1: Make sure that the power to the system monitor is turned off. If not, press the EMO (EMERGENCY OFF) switch to turn the power off.

□ Check 2: Make sure that the VKT is connected to the serial port J3 on the TC4 SYS-MON board.

□ Check 3: Make sure that the console is turned on.

□ Check 4: Make sure that the console is set as shown below.

SPEED:	9600
Parity:	None
XON/OFF:	None
RTS/CTS:	Disabled

△ Operation 1: Turn the key switch on the AC CONT panel off.

△ Operation 2: Set MODE SELECT to 0xFE.

△ Operation 3: Press the START switch on the AC CONT panel.

□ Check 5: Make sure that the STATUS code on the AC CONT panel reads 0x0F0.

The ROM monitor startup procedure is now complete.

(2) Reset Method

△ Operation 1: Press the EMO (EMERGENCY OFF) switch to turn the power to the system monitor off.

△ Operation 2: Set MODE SELECT to 0x00.

△ Operation 3: Press the START switch on the AC CONT panel.

The system monitor is now turned on.

(3) Method for using commands

Note 1: Only uppercase letters can be used.

Note 2: Use the Del key to delete characters.

□ Check 1: Make sure that the console displays the message the one shown below.

ROM Monitor Mode rev xx.xx

xx/xx/xx xx:xx:xx ← Date and time at startup

Advantest ATE development section.

Hit any key to continue. ← Blinking

△ Operation 1: Press any key.

□ Check 2: Make sure that the prompt #>> appears on the VKT screen.

The system is now ready to accept commands.

3.11.2 Setting the Monitor I/F ID

(1) Setting the monitor I/F ID to NVRAM

△ Operation 1: Start the ROM monitor. (Refer to Section 3.11.1 “Using ROM Monitor Board.”)

△ Operation 2: Enter the command “SETMIFID.”

□ Check 1: Make sure that the VKT screen looks like the one shown below.

#>>SETMIFID	(1: Available, 0: N/A, E: Forcible exit)	
mid id set (1/0 or E)	AA:	Monitor I/F ID
id_AA (1/0) [B]	B:	Whether the monitor I/F is installed (information written in NVRAM)

Note1: When you enter only the return key, the value in [ ] is set.

Note2: Always set all items including the monitor I/F ID.

Note3: When you finished making this setting, the ONLINE check starts automatically.

(Example)

```
#>>SETMIFID
mif id set (1/0 or E)
id_ 01 (1/0) [1] 1
id_ 02 (1/0) [0] 0
id_ 03 (1/0) [1] 0
        :
        :
        :
        :
id_ 1D (1/0) [1] 0
id_ 1E (1/0) [1] 0
```

□ Check 2: Make sure that the VKT screen looks like the screen shown in ① below.

① When the input information and the information from the currently connected monitor I/F match.

“mif on line check pass”

② When the input information and the information from the currently connected monitor I/F do not match.

“mif on line check fail”

③ Data was set to 0 (MIN: 1 unit).

“mif id set error (mif is all 0)”

(2) Displaying the information set in NVRAM

△ Operation 1: Start the ROM monitor. (Refer to Section 3.11.1, “Using ROM Monitor Board.”)

△ Operation 2: Enter the command “READMIFID.”

```
#>>READMIFID
mif id read

[NVRAM] id read (Mi/f)
id_ 01 = 01  id_ 02 = 00  id_ 03 = 00  id_ 04 = 00  id_ 05 = 00 ◄── (01: Available; 00: N/A)
id_ 06 = 00  id_ 07 = 00  id_ 08 = 00  id_ 09 = 00  id_ 0A = 00
id_ 0B = 00  id_ 0C = 00  id_ 0D = 00  id_ 0E = 00  id_ 0F = 00
id_ 10 = 00  id_ 11 = 00  id_ 12 = 00  id_ 13 = 00  id_ 14 = 00
id_ 15 = 00  id_ 16 = 00  id_ 17 = 00  id_ 18 = 00  id_ 19 = 00
id_ 1A = 00  id_ 1B = 00  id_ 1C = 00  id_ 1D = 00  id_ 1E = 00
```

(3) Displaying the information on the currently connected monitor I/F

△ Operation 1: Start the ROM monitor. (Refer to Section 3.11.1, “Using ROM Monitor Board.”)

△ Operation 2: Enter the command “READMIFID.”

```
#>>READMIFID1
[ONLINE] id read (Mi/f)
mif_ id = 01 ◄──────────── Displays the ID of the currently connected monitor I/F only.
```

3.11.3 Setting Date and Time

(1) Method for setting a date

△ Operation 1: Start the ROM monitor. (Refer to Section 3.11.1, “Using ROM Monitor Board.”)

△ Operation 2: Enter the command “DATE.”

date of now: (94/12/17) ← Displays the current date.
input date -> YY/MM/DD ← Enter the new value you want to set.
YY: Calendar year (2 low-order digits)
MM: Month
DD: Day

Note: When you enter only press the return, the changes you've set are not executed.

(2) Method for setting time

△ Operation 1: Start the ROM monitor. (Refer to Section 3.11.1, “Using ROM Monitor Board.”)

△ Operation 2: Enter the command “TIME.”

time of now: (13:29:13) ← Displays the current time.
input date -> HH/MM/SS ← Enter the new value you want to set.
HH: Hours (24-hour system)
MM: Minutes
SD: Seconds

Note: When you enter only press the return, the changes you've set are not executed.

3.11.4 Setting the System Type

(1) Method for setting the system type in NVRAM

△ Operation 1: Start the ROM monitor. (Refer to Section 3.11.1, “Using ROM Monitor Board.”)

△ Operation 2: Enter the command “SETSYSTEM.”

□ Check 1: Check to see that the console looks like the one shown below.

```
# >> SETSYSTEM
          1:  T6681
          2:  OTHER
     Select NO:
```

△ Operation 3: Enter “2” for Select No and choose “OTHER” for the system type.

□ Check 2: Check to see that the console looks like the one shown below.

```
     Select No. 2
     THIS SYSTEM IS OTHER
# >>
```

(2) Method for verifying the system type

△ Operation 1: Press the EMO (EMERGENCY OFF) switch to turn the power to the system monitor off.

△ Operation 2: Set MODE SELECT to 0x00.

△ Operation 3: Turn the key switch off.

△ Operation 4: Press the START switch on the AC CONT panel.

△ Operation 5: Set MODE SELECT to 0xD3 and press the DIAG switch.

□ Check 1: Check to see if the LED indicator on the AC CONT displays “0x999.” If the status is not “0x999,” a TC power supply error results when you turn the key switch on. If this happens, set the system type again.

(3) Method of resetting

△ Operation 1: Set MODE SELECT to 0x00.

Thus, the system is ready to accept your instruction to turn the key switch on.

4. LED SPECIFICATIONS

The diagram below shows specifications of each LED on the LED-fitted board.

4.1 TC4 and TC7 UNIT LEDs Specifications

(1) Specifications of the TC4 Unit LEDs

Table 4-1 Specifications of the TC4 Unit LEDs

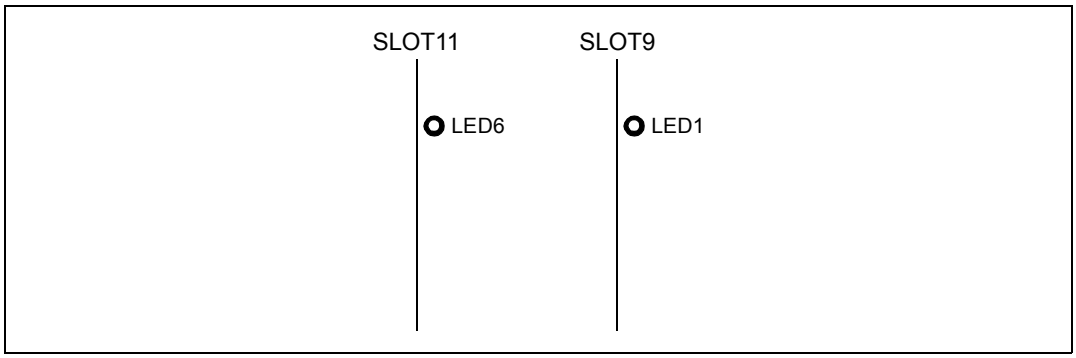

SLOT No.	Circuit Name	LED No.	Color	Description
9,11	GPIB VME	1, 6	Green/ Red	Lit in red when the power is turned on, or lit in green when a Viewpoint command is issued.

(2) Specifications of the TC7 Unit LEDs

Table 4-2 Specifications of the TC7 Unit LEDs

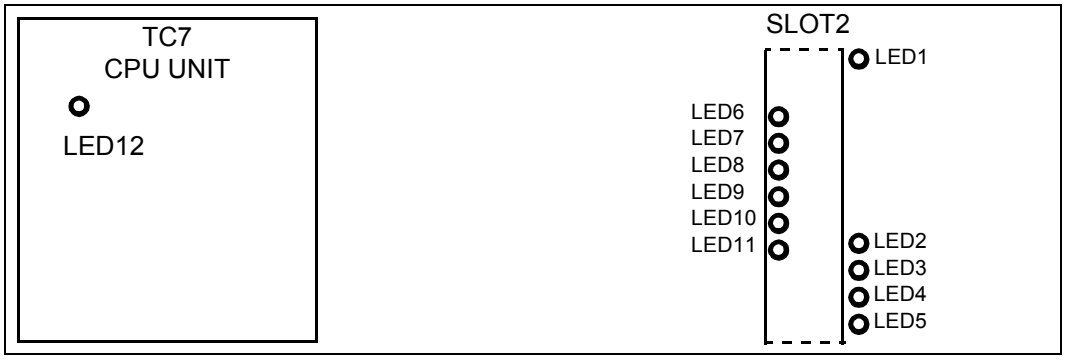

Circuit Name	LED No.	Color	Display Description
TC6 IO IF board	LED1	Green	Lit when SYSMON is turned ON.
	LED2	Green	Lit when the FiFo READ cycle is active.
	LED3 LED4 LED5	Green Green Green	[D13, D14, and D15] indicate the DATA row number accumulated on the FiFo.
TC6 IO OPTION IF board	LED6	Green	Lit when EXT Ach is Busy.
	LED7	Green	Lit when EXT Bch is Busy.
	LED8 LED9 LED10 LED11	Green Green Green Green	Not used
TC7 CPU unit	LED12	Green	Lit after the CPU is started.

4.2 Specifications of the DP Unit LEDs

Table 4-3 Specifications of the DP Unit LEDs

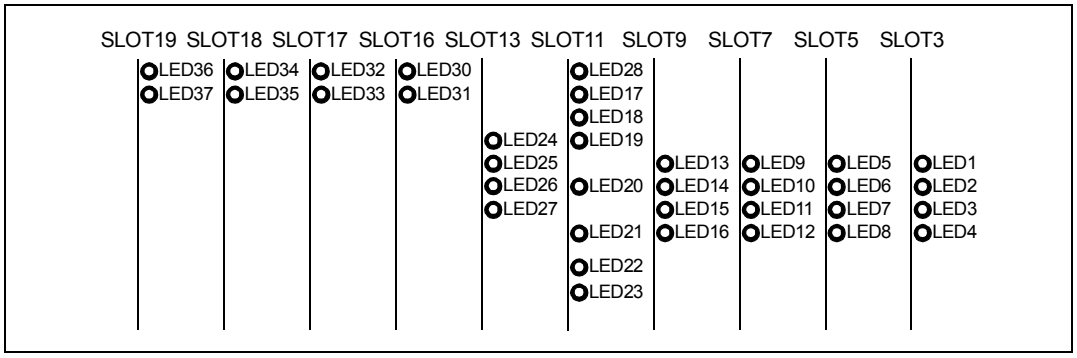

SLOT No.	Circuit Name	LED No.	Color	Description
3, 5, 7, 9	DPS-CONT	1, 5, 9,13	Green	Lit when the oscillation, guard or Kelvin alarm occurs.
		2, 6, 10,14	Green	Lit when the clamp alarm occurs.
		3, 7, 11,15	Green	Lit when the DSP is in RON.
		4, 8, 12,16	Green	Lit when the DSP is under A/D conversion.
(11)	(IF)	28	Orange	Turns off when the configuration has been completed.
11	IF	17	Green	Not applicable.
		18	Green	Not applicable.
		19	Green	Not applicable.
		20	Orange	Lit when the DSP clamp alarm occurs.
		21	Red	Lit when the heat sink alarm occurs.
		22	Green	Lit when -5.2 V power supply is turned on.
		23	Green	Lit when +5 V power supply is turned on.
13	UDC-CONT	24	Green	Lit when the clamp alarm occurs.
		25	Green	Lit when the guard alarm occurs.
		26	Green	Lit when the DC is under A/D conversion.
		27	Green	Lit when the DC is in RON.
16, 17, 18, 19	MDC	30, 32, 34, 36	Orange	Lit when the clamp alarm occurs.
		31, 33, 35, 37	Orange	Lit when the guard alarm occurs.

4.3 Specifications of the Monitor I/F LEDs

Table 4-4 Specifications of the Monitor I/F LEDs

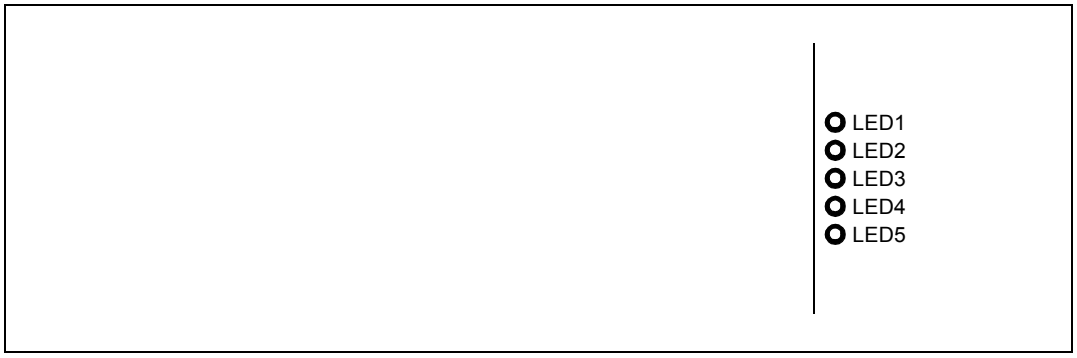

SLOT No.	Circuit Name	LED No.	Color	Description
1	MONITOR I/F	1	Green	Lit when +5 V power supply is turned on.
		2	Green	Lit when -5.2 V power supply is turned on.
		3	Green	Lit when +12 V power supply is turned on.(TC4) Lit when +5 V power supply is turned on.(TC7)
		4	Green	Lit when +5 V power supply is turned on.
		5	Green	Lit when +24 V power supply is turned on.

5. BOARD REPLACEMENT

5.1 How to Read the Cable Marker

All cables in the tester unit of this test system have cable markers attached. The cable marker has a tag indicating where each cable should be connected.

In the example below, the cable marker reads “SQPG S2, J6.” This means that the cable should be connected to connector No. 6 in slot 2 of the PG unit.

For details about unit names, slots, and connector numbers, refer to each cable connection diagram.

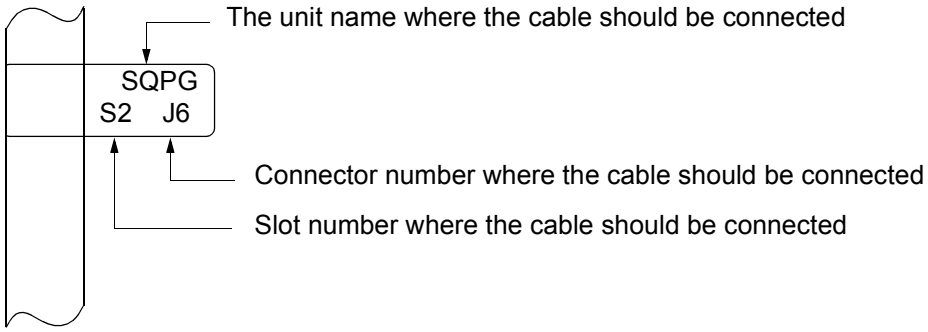

How to read the cable marker

5.2 Detaching/Attaching Boards Mounted Inside the Frame

Detachable handles, shown in Figure 5-1 are located at the top and bottom of the frame. To detach or attach a board, position the board handles so that the small slot fit over the knobs on the outside of the board frame.

When inserting the board, push the board in with your hand until the connector guide of the back board and the board are engaged.

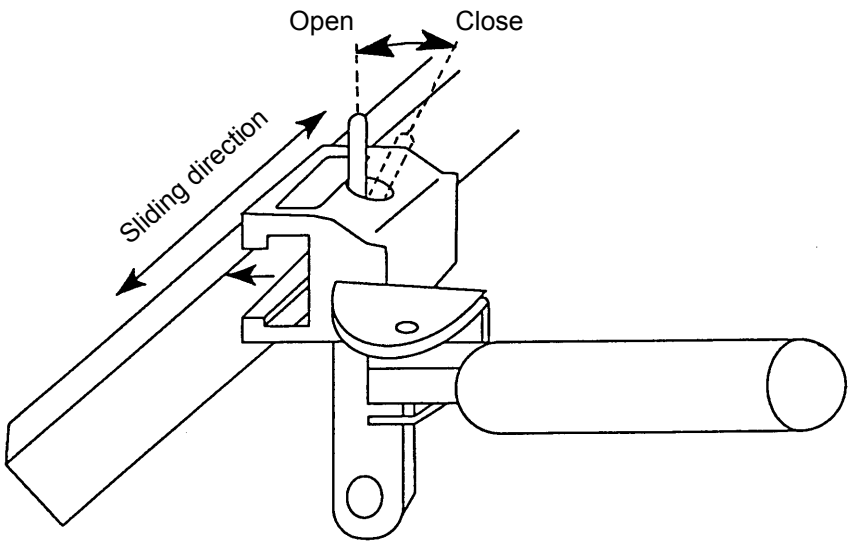

Figure 5-1 Board Handle (KH9-90287)

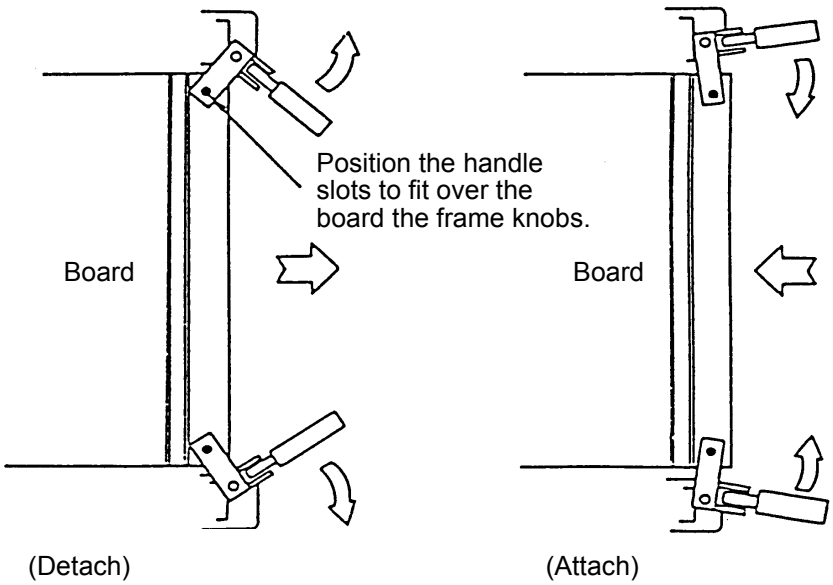

Figure 5-2 Detaching and Attaching the Board

5.3 Detaching/Attaching the Boards Mounted in the Test Head

5.3.1 Detaching/Attaching the Mounted Board

To detach or attach a board from the test head, use the jig provided (shown in Figure 5-3).

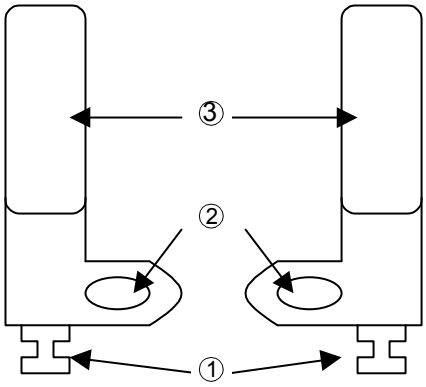

Figure 5-3 Test Head Board Handle

To remove the pin electronics card, insert ① the pulling jig into the rail, place ② on the pin at the top of the pin electronics card, then grasp ③ and push outward.

To insert the pin electronics card, grasp ③ and pull inward.

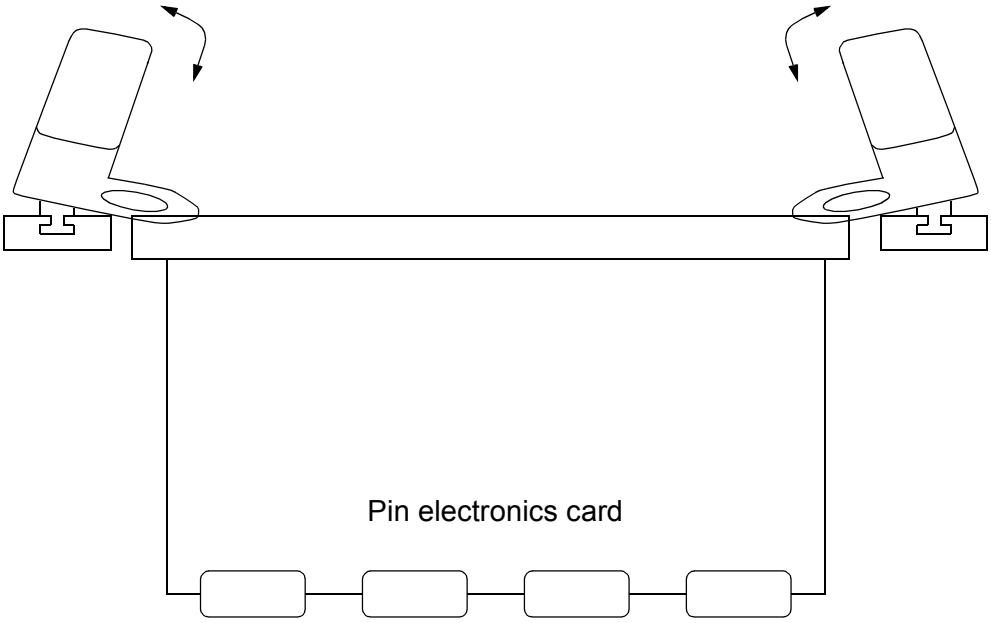

Figure 5-4 Detaching/Attaching Test Head Board

5.4 Procedure for Replacing the Pin Electronics Card (PE)

Use the following procedure to replace pin electronics cards. Be extremely careful with pin electronics cards which are precision products.

(1) Press button ① in Figure 5-5 to let the performance board free, then remove the performance board.

(2) Press the MB FREE button (button ② in Figure 5-5) to let the HIFIX free.

(3) Unscrew the four screws on the outer panel of the HIFIX, then remove the outer panel.

(4) Remove the air hose connected to ③ in Figure 5-5 using shown in Figure 5-6. (Note 1)

Note1: Use the appropriate procedure to remove the air hoses, or they may be damaged.

(5) Hold the handles and the levers ④ in Figure 5-5 and remove the HIFIX. (Note 2)

Note2: Since the HIFIX is heavy, make sure two people remove it.
Connect or disconnect the HIFIX in a horizontal position, since it is positioned precisely using guide pins.
Hold the handles ④ and the levers ⑤ together. <u>The HIFIX may be locked incorrectly</u> if the handles and levers are handled incorrectly.

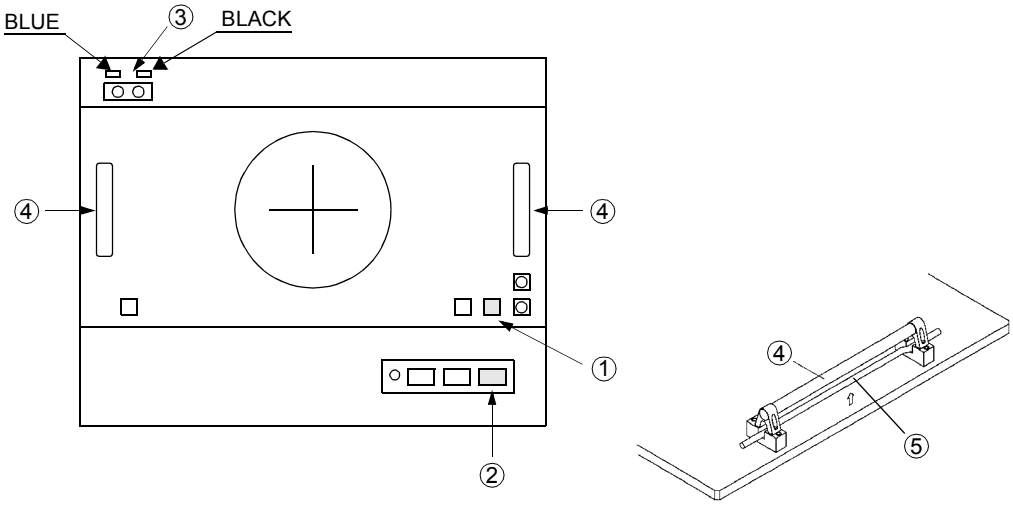

Figure 5-5 TH (1)

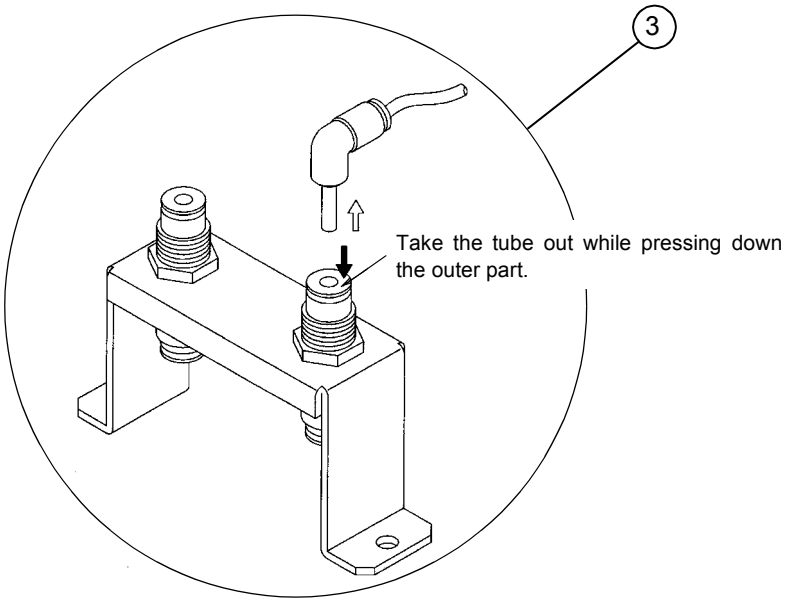

Figure 5-6 How to take out the tube

(6) Extract the PE using the jig provided shown in Figure 5-3 (Note 3)

Note3: Always be sure to wear a earth clip when replacing the PE.

(7) To assemble, reverse the sequence of steps (1) through (6). Check to see that the PE is firmly inserted. (Note 4)

Note4: When inserting PEs, hold them securely with your hands until they are completely pushed in. Otherwise they may drop due to their weights.
Be careful not to catch your finger between the board and the support bar.
Use an air hose of the specified color.

5.5 Procedure for Replacing the Test Head Board Power Supply

(1) Press button ① in Figure 5-5 to let the performance board free, then remove the performance board.

(2) Press the MB FREE button (button ② in Figure 5-5) to let the HIFIX free.

(3) Unscrew the four screws on the outer panel of the HIFIX, then remove the outer panel.

(4) Remove the air hose connected to ③ in Figure 5-5 using shown in Figure 5-6. (Note 1)

Note1: Use the appropriate procedure to remove the air hoses, or they may be damaged.

(5) Hold the handles ④ in Figure 5-5 and remove the HIFIX. (Note 2)

Note2: Since the HIFIX is heavy, make sure two people remove it.
Connect or disconnect the HIFIX in a horizontal position, since it is positioned precisely using guide pins.

(6) Use the procedure below to remove a cylinder from each side of the Test Head (as a result, two cylinders must be removed from both sides of the Test Head).

- Remove two M8 hexagon socket screws from each side.
- Remove two air tubes (one blue tube and one black tube).

Note3: Remove the tubes as shown in the diagram, or the nipples may be damaged.

(7) Disconnect the cables from the board power supply.

(8) Use the jig to remove the Test Head board power supply.

Note4: Always use the included grounding wrist band when replacing the Test Head board power supply.

(9) Perform Steps (1) thru (8) in reverse order to install the Test Head board power supply, and confirm that it has been inserted correctly.

Note5: Hold the board power supply securely to prevent it from falling during the installation. In addition, connect the air hoses using their colors as a guide.

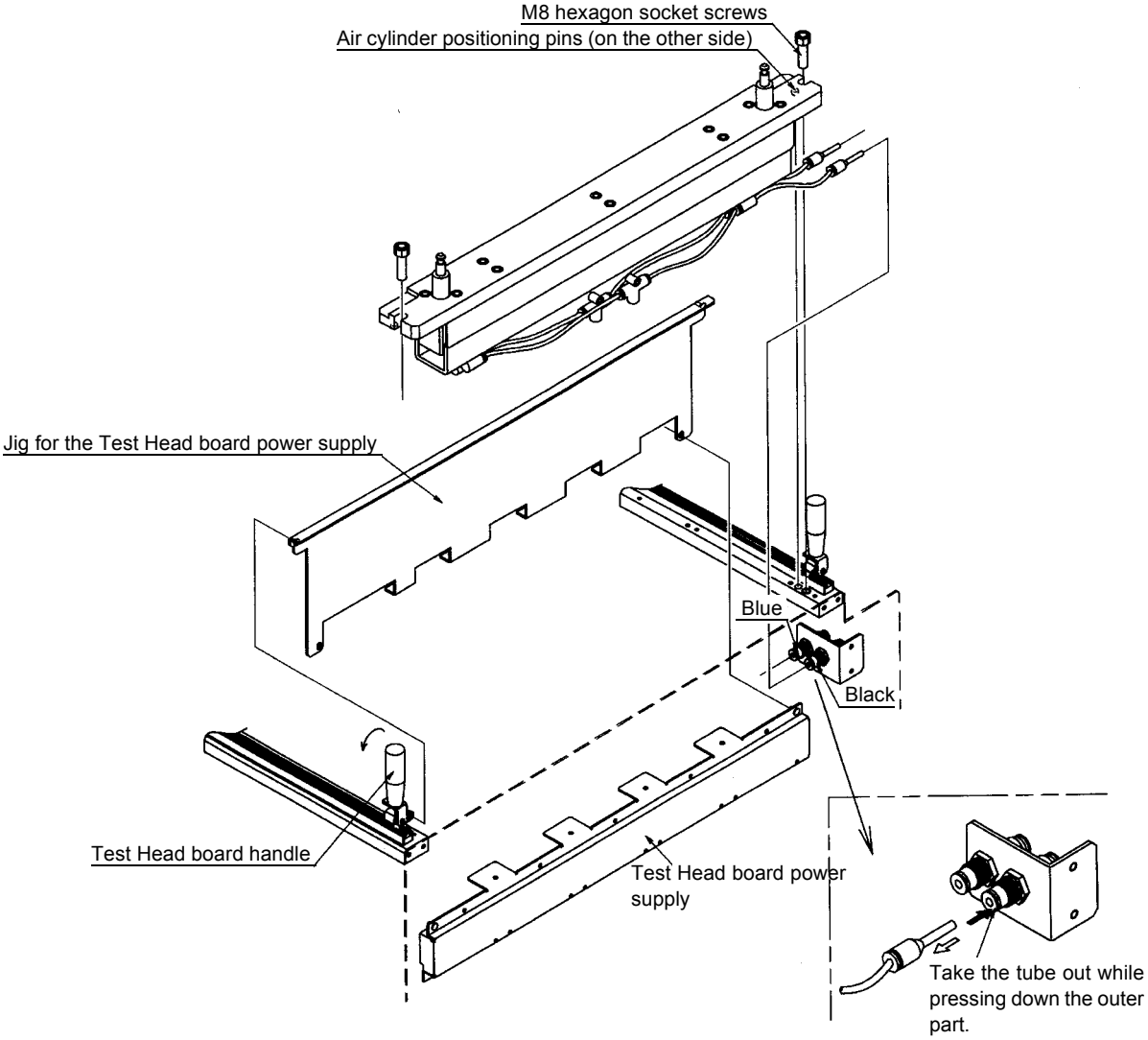

Figure 5-7 Procedure for Replacing the Test Head Board Power Supply

5.6 Precautions to Be Taken when Carrying Boards

Always be sure to use the rack provided when transporting the circuit boards listed below.

Name	Trunk Case Type
Pin electronics card	H9-91631
Board power supply	H9-91632

5.7 Operation when Replacing Boards

(1) Before replacing the monitor I/F, press the EMO (EMERGENCY OFF) switch to turn the main power supply off.

(2) Make sure the fan has stopped before you remove or insert a connector or board.

(3) After replacing the board, change the board's revision setting.

The following shows how to change the configuration data.

The underlined part denotes a string to be entered from the keyboard.

① Log in to Engine as a general user.

② Move the directory to $ADVANTEST_HOME/data/host/<host>/sys_data.

```
% cd $ADVANTEST_HOME/data/host/<host>/sys_data
```

③ Copy the revision number setup file of the board before creating a backup. This helps to prevent the data from an operational mistake, power outage, or unexpected damage.

```
% cp atd_boarddatn.db atd_boarddatn.db.BAK
```

④ Start the boardrev program. Then choose menu "3."

```
% boardrev
  ----------------------------------------------------------------

          T6573 Board Revision Program Rev0.1

         Database File                      Working File
      +------------------+  --- 1--->  +----------------+
      | atd_boarddatn.db |              | at_boardch.dat |
      +------------------+  <---2 ---  +----------------+

  1. extract working file from database file
  2. recreate database file from working file
  3. 1 + 2 (using editor)
  4. 1 + 2 (interactive operation)
  q. quit from menu

  Please input a number that selected from the menu: 3
```

⑤ The vi editor starts and when the board REVISION data (before any corrections) appears, make the necessary changes.

```
<UNIT>     <SLOT>     <BOARD>        <FUNCTION>     <REV>     <SER>
[TOP]-------------------------------------------------------------
DPU1       DMM        R6581T         DMM            -         -
DPU1       3          BGR-024897     DPS_CONT       -         -
DPU1       4          BGR-023715¥02  DPS1           -         -
DPU1       5          BGR-024897     DPS_CONT       -         -
DPU1       6          BGR-023715×02  DPS2           -         -
DPU1       7          BGR-024897     DPS_CONT       -         -
DPU1       8          BGR-023715×02  DPS3           -         -
DPU1       9          BGR-024897     DPS_CONT       -         -
DPU1       10         BGR-023715×02  DPS4           -         -
DPU1       12         BGR-024899     IFL            -         -
DPU1       13         BGR-023709     IFA            -         -
...
...
[EOF]-------------------------------------------------------------
```

In the following explanation, the word “row” refers to a horizontal list and the word “column” refers to a vertical list. <UNIT>, <SLOT>, etc. in the first row are not displayed. Rows [TOP]--- and [EOF]--- are not displayed either.
The <REV> column lists the previous revision numbers. The <SER> column lists the previous serial Nos.. Change the data in the <REV> and <SER> columns only, and no other data. Rows that contain data you do not change can be deleted. For details on how to use the vi editor, refer to the manual included with your vi editor.

Here, it is assumed that you have corrected the data as follows.

```
[TOP]-------------------------------------------------------
DPU1       7          BGR-024897     DPS_CONT     ABC     3150
DPU1       9          BGR-024899     IFL          ABD     3420
[EOF]-------------------------------------------------------
```

Save the contents you’ve corrected and exit the editor.

⑥ When you are back at the boardrev menu, choose “y” to have the corrections to board revision numbers reflected in the file. When you are back at the menu again after the corrections are reflected, choose “q” to quit the menu.

```
creat new board.db? [y or n]:y

DPU1        7           BGR-024897     DPS_CONT       ABC      3150
DPU1        9           BGR-024899      IFL           ABD      3420
  ---------------------------------------------------------------------

        T6573 Board Revision Program Rev0.1

       Database File                      Working File
    +------------------+ --- 1--->  +----------------+
    | atd_boarddatn.db |            | at_boardch.dat |
    +------------------+ <---2 ---  +----------------+

1. extract working file from database file
2. recreate database file from working file
3. 1 + 2 (using editor)
4. 1 + 2 (interactive operation)
q. quit from menu

Please input a number that selected from the menu:q

%
```

⑦ Delete the previous file.

```
% rm atd_boarddatn.db.BAK
%
```

When replacing the board, back the configuration data.The following shows how to save the data.

(a) Saving to a floppy disk (TC4-installed test system)

① Move the directory to `$ADVANTEST_HOME/data/host/<host>/sys_data`.

```
% cd $ADVANTEST_HOME/data/host/<host>/sys_data
```

② Change to the root directory.

```
% su
Password:_______
#
```

③ Check that hwconfig.dat, atd_boarddatn.db exists in the file.

```
# ls hwconfig.dat atd_boarddatn.db
```

④ Insert a floppy disk into the drive.

⑤ Enter the volcheck command.

```
# volcheck
```

⑥ Use the tar command to save the configuration data to the floppy disk.

```
# tar cvf /vol/dev/aliases/floppy0 hwconfig.dat atd_boarddatn.db
```

⑦ Enter the eject command.

```
# eject
```

⑧ Remove the floppy disk from the drive.

(b) Saving on the CD-RW (TC7-installed test system)

① Move the directory to `$ADVANTEST_HOME/data/host/<host>/sys_data`.

```
% cd $ADVANTEST_HOME/data/host/<host>/sys_data
```

② Perform the following operations as a root user.

```
% su
Password:___________
#
```

③ Check that hwconfig.dat, atd_boarddatn.db exists in the directory.

```
# ls hwconfig.dat atd_boarddatn.db
```

④ Insert the CD-RW used for storage into the drive.

⑤ Clear data written on the CD-RW by entering the following command. The cdrom file manager will start at this point. If the cdrom file manager is already running, exit it first.

```
# cdrw -b session
```

⑥ The CD-RW is ejected from the drive if data is cleared, re-insert the CD-RW into the drive.

⑦ Move to the home directory.

```
# cd
```

⑧ Back up data by entering the following command.

```
# sys data back
```

⑨ The CD-RW is ejected from the drive if data is backed up. Remove the CD-RW from the drive and press the eject button to close the tray.

6. UNIT, POWER SUPPLY LAYOUT, AND VOLTAGE SPECIFICATION

6.1 System Layout

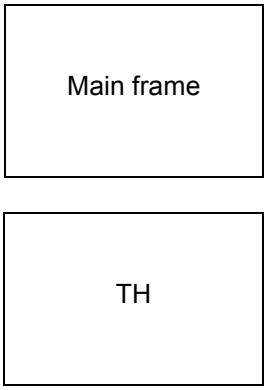

Figure 6-1 System Layout

6.2 Arrangement Inside the Main Frame

FRONT VIEW

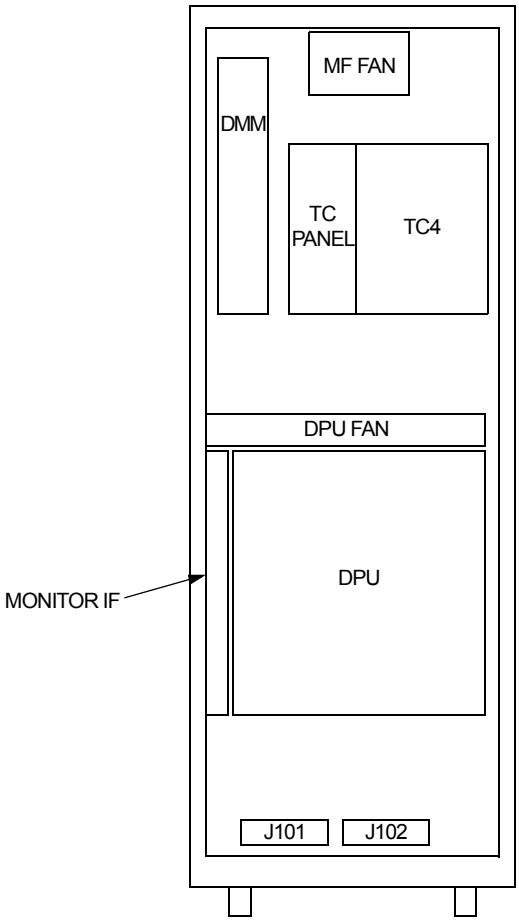

J101, J102: (ATK-30N3-10P)

Figure 6-2 Arrangement Inside the Main Frame (FRONT VIEW)

REAR VIEW

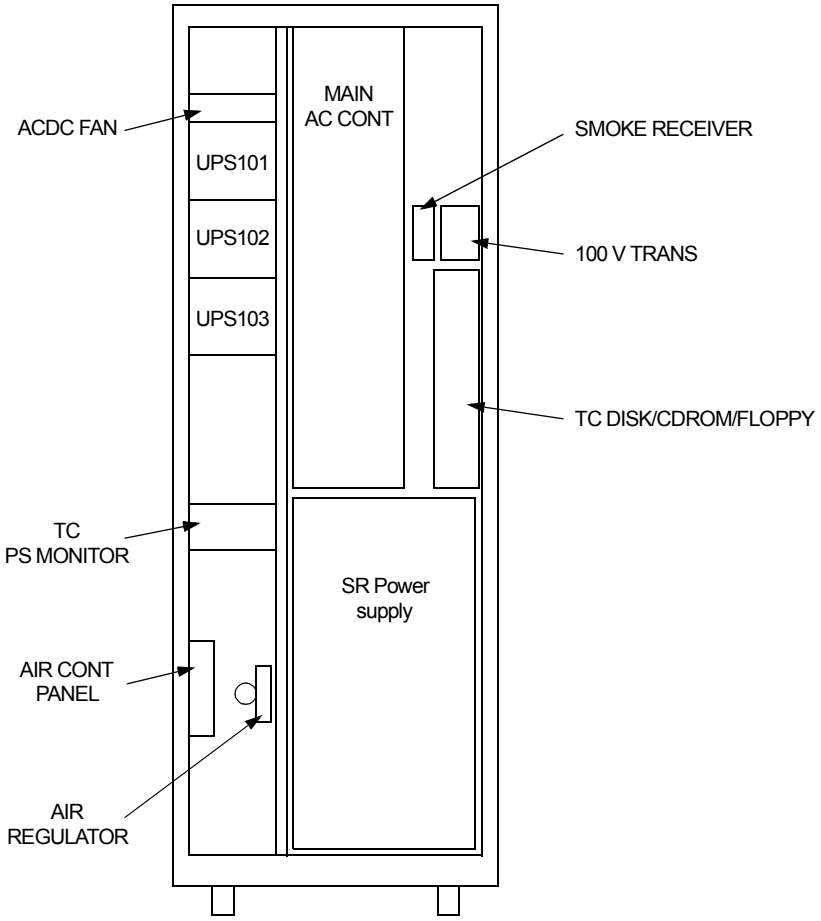

Figure 6-3 Arrangement Inside the Main Frame (REAR VIEW)

MF REAR VIEW

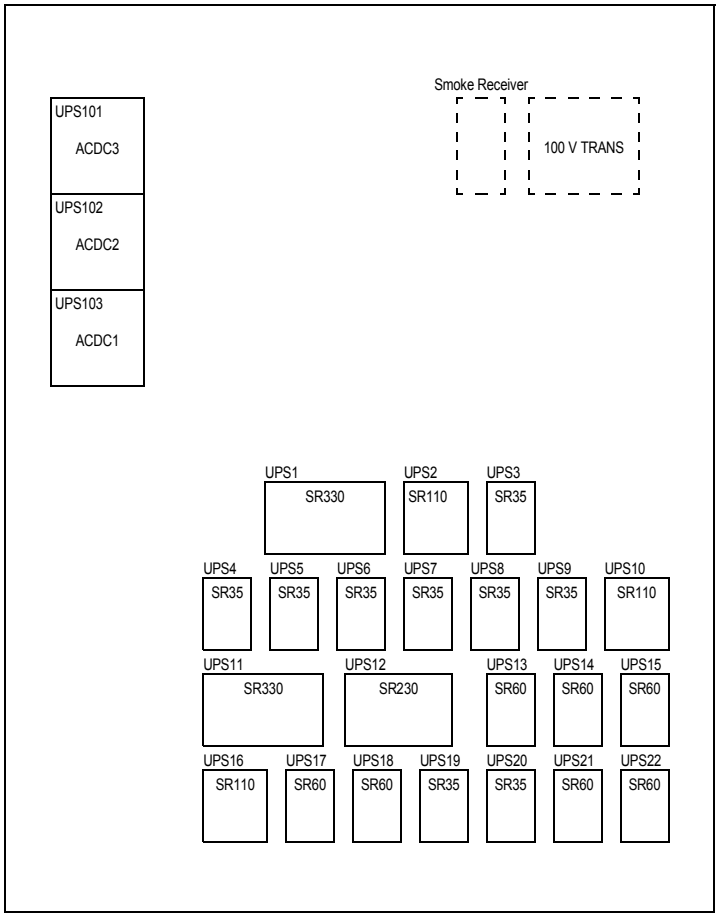

Figure 6-4 UPS Power Supply Layout Diagram

6.3 Installed Safety Device Locations

FRONT VIEW for UP FLOW

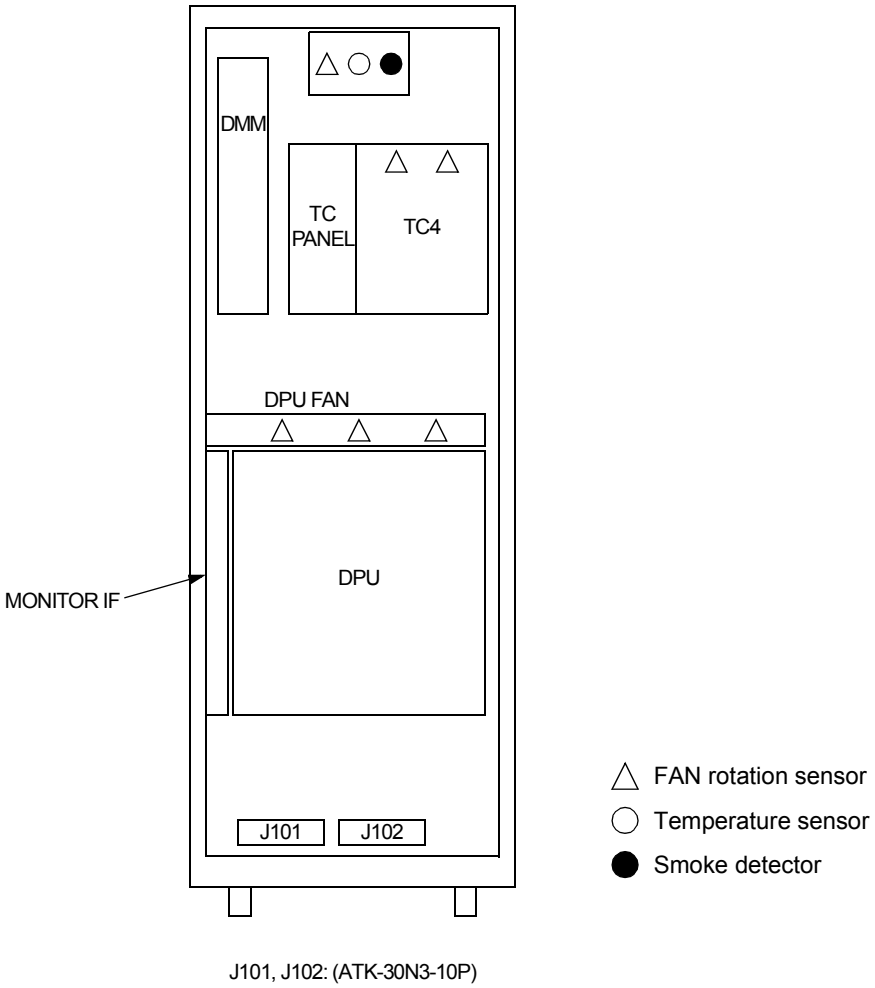

Figure 6-5 Locations where MF Safety Devices Are Installed (FRONT VIEW for UP FLOW)

REAR VIEW for UP FLOW

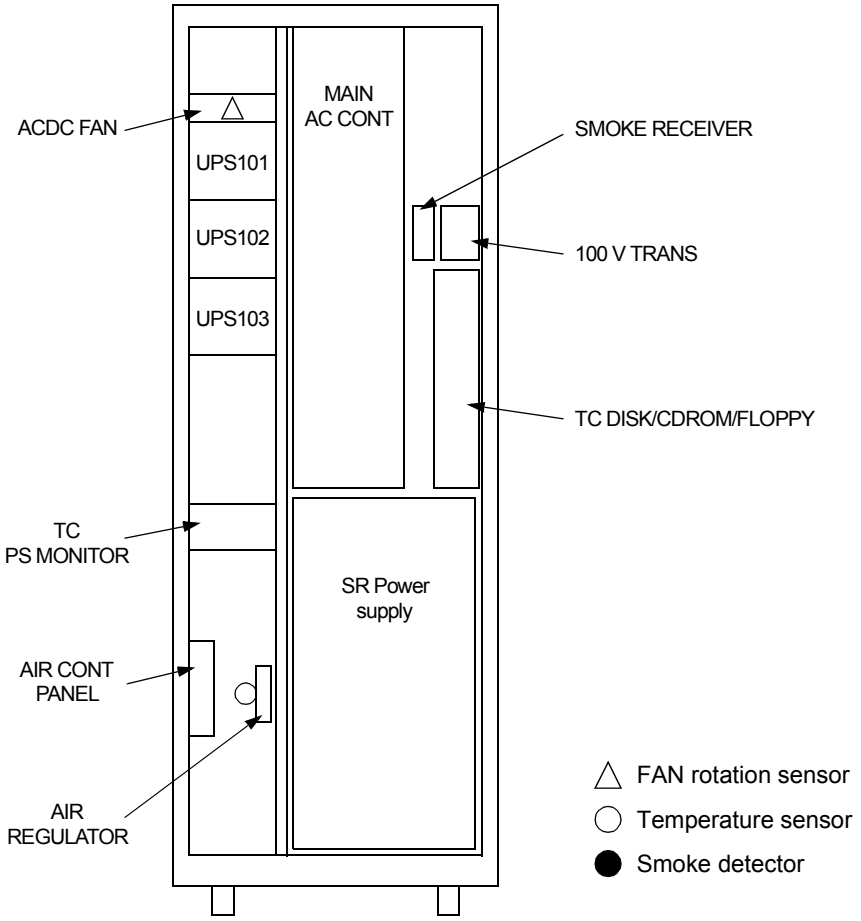

Figure 6-6 Locations where MF Safety Devices Are Installed (REAR VIEW for UP FLOW)

FRONT VIEW for DOWN FLOW

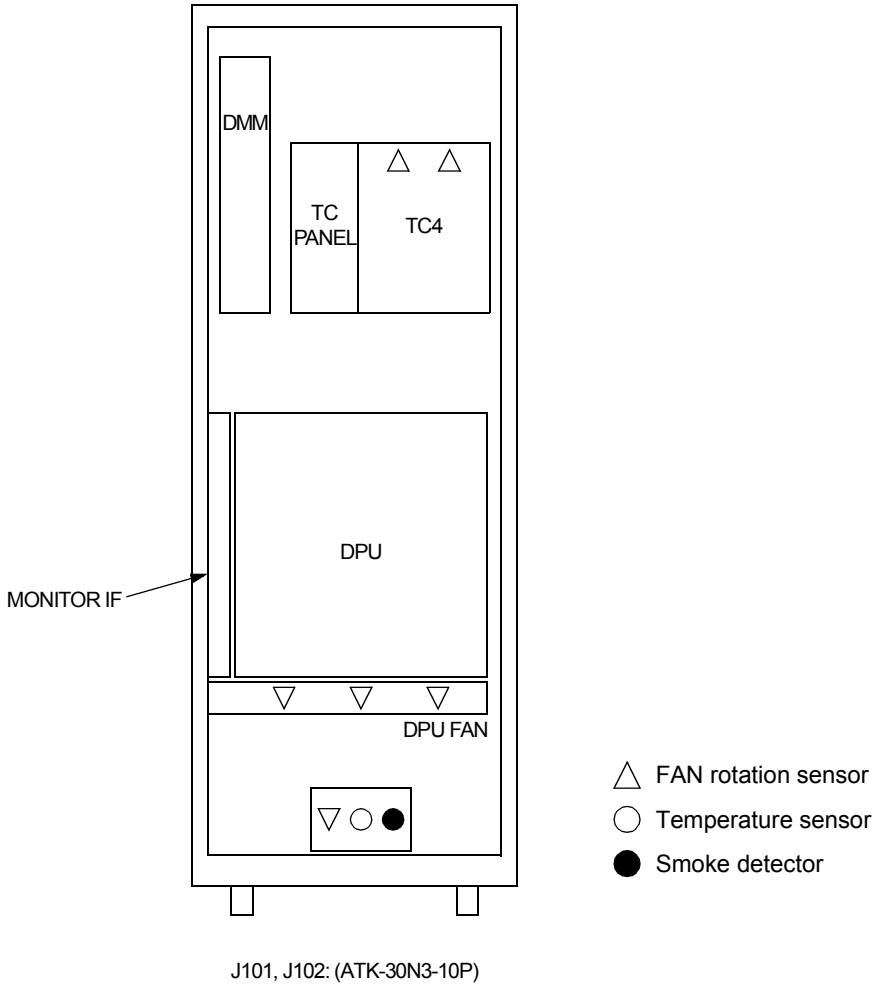

Figure 6-7 Locations where MF Safety Devices Are Installed (FRONT VIEW for DOWN FLOW)

REAR VIEW for DOWN FLOW

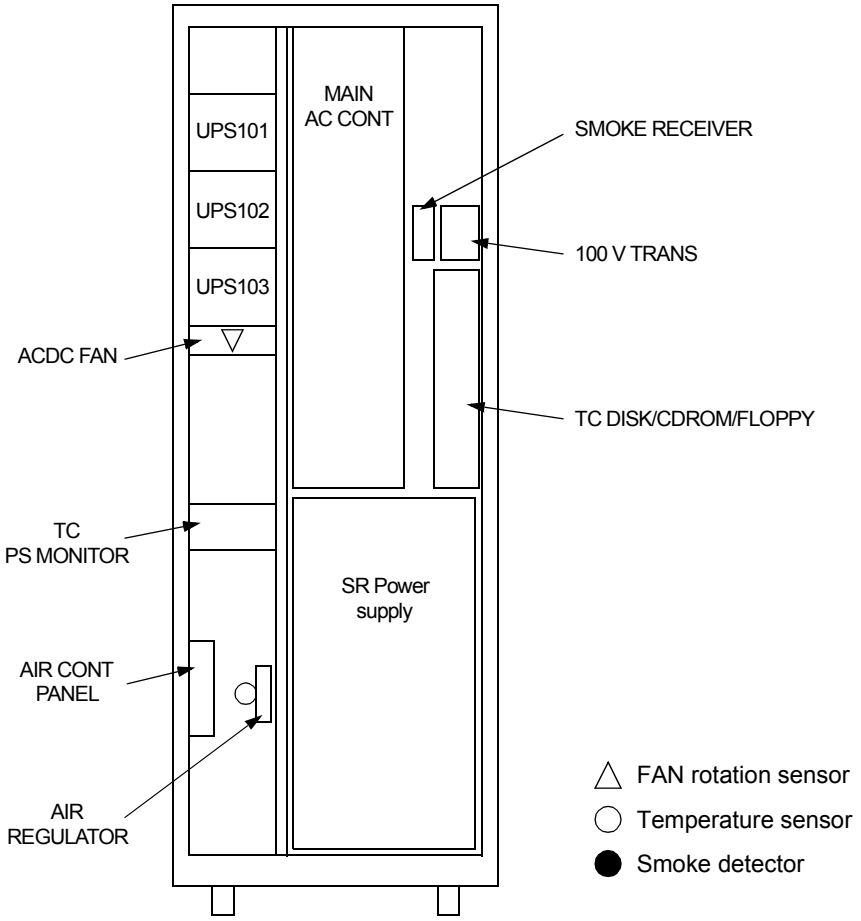

Figure 6-8 Locations where MF Safety Devices Are Installed (REAR VIEW for DOWN FLOW)

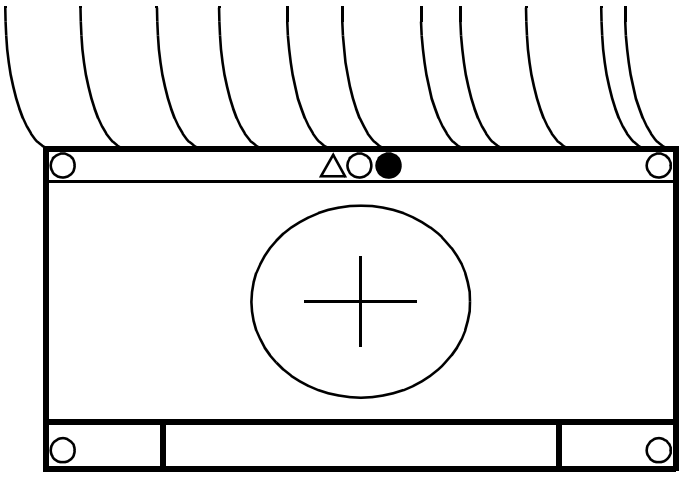

FRONT

Figure 6-9 Locations where TH Safety Devices Are Installed

6.4 Center of Gravity and Skeleton Diagrams

(1) Center of Gravity of the Main Frame

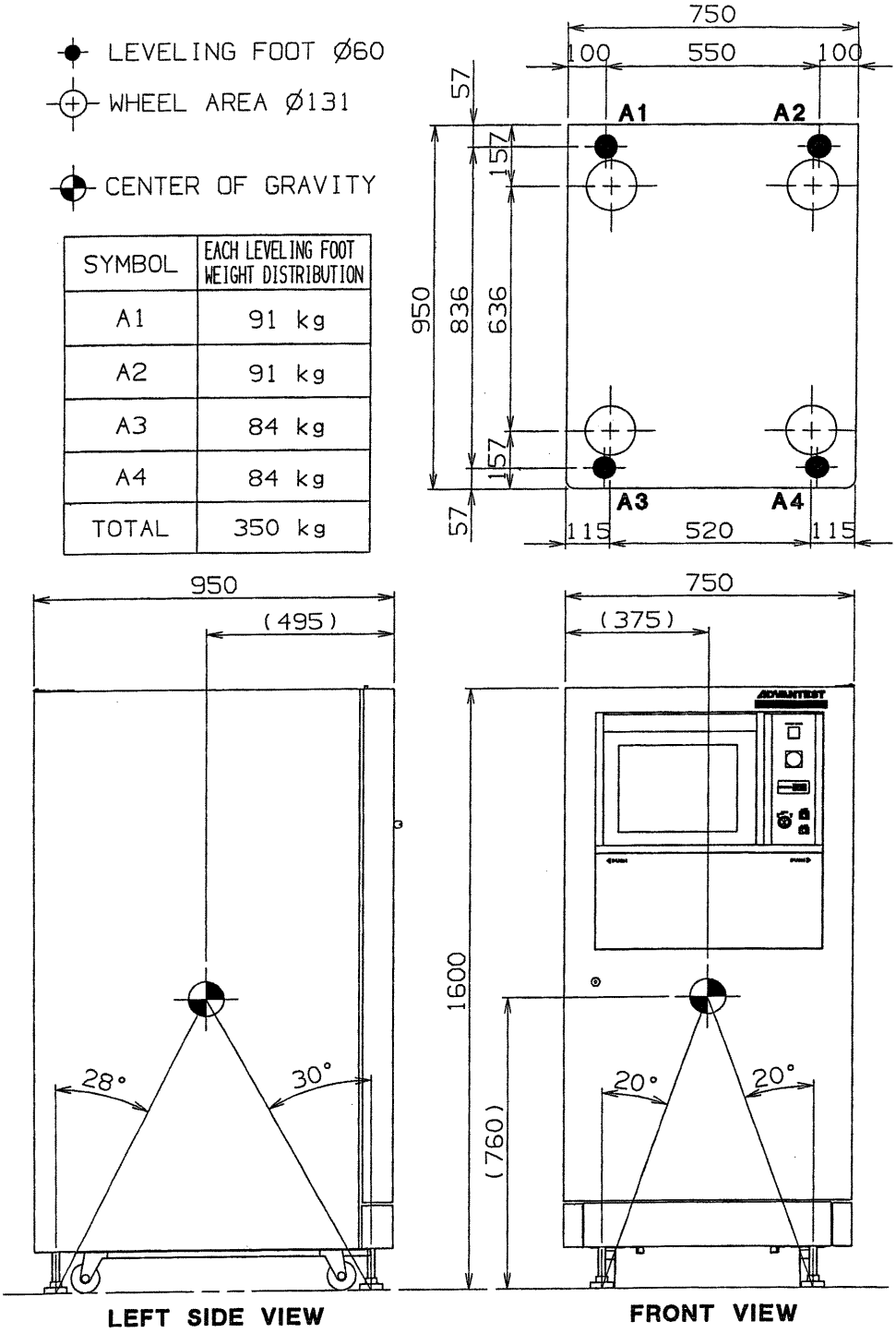

SYMBOL	EACH LEVELING FOOT WEIGHT DISTRIBUTION
A1	91 kg
A2	91 kg
A3	84 kg
A4	84 kg
TOTAL	350 kg

Figure 6-10 Center of Gravity of the Main Frame

(2) Skeleton diagram of Main Frame

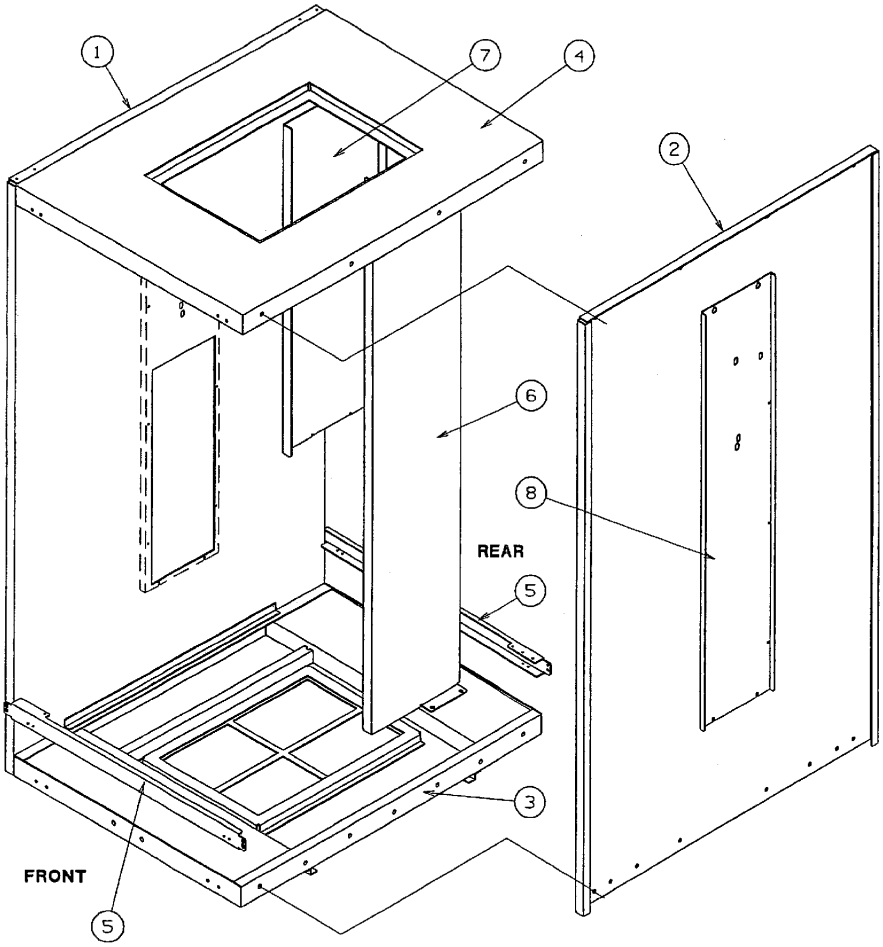

T6573/63/33 FRAME STRUCTURE

No.	TITLE	MATERIAL	MEASURE
1	SIDE FRAME L	SPCC-SD	25×890×1494, t2.6
2	SIDE FRAME R	SPCC-SD	25×890×1494, t2.6
3	BASE FRAME	SPCC-SD	50×890×650, t2.6
4	TOP FRAME	SPCC-SD	50×890×650, t2.6
5	DOOR HOLDER	SPCC-SD	27.5×42×689, t2.6
6	CTR FRAME RM	SPCC-SD	25×265×1400, t2.6
7	CTR FRAME RR	SPCC-SD	51×280×833.6, t2.6
8	SIDE COVER	SPCC-SD	15×210×1050, t1.6

Figure 6-11 Skeleton Diagram of Main Frame

6.5 Specifications of Unit Power Supplies

Table 6-1 Specifications of Unit Power Supplies in the Main Frame

UPS	Advantest Standard Name	Power Supply Name	Voltage	Remarks
UPS1	DPS-001623	SR330-5	+5 V	TC+5 (Note 1)
UPS2	DPS-001619	SR110-12	+12 V	TC+12 (Note 1)
UPS3	DPS-001894	SR35-12	-12 V	TC-12 (Note 1)
UPS4	DPS-001895	SR35-5	+5 V	TC+5 (Note 2)
UPS5	DPS-001895	SR35-5	-5.2 V	TC-5.2 (Note 2)
UPS6	DPS-001895	SR35-5	+5 V	SYS MONI (Note 3)
UPS7	DPS-002504	SR35-24	+24 V	AIR-CONT/CBOX (Note 3)
UPS8	DPS-001895	SR35-5	+5 V	MIF+5 (Note 3)
UPS9	DPS-001895	SR35-5	-5 V	MIF-5 (Note 3)
UPS10	DPS-001621	SR110-24	-24 V	MF FAN (Note 1)
UPS11	DPS-001627	SR330-24	-24 V	TH FAN
UPS12	DPS-001649	SR230-12	+11.5 V	TH
UPS13	DPS-001742	SR60-9	-8 V	TH
UPS14	DPS-001616	SR60-15	+15 V	TH
UPS15	DPS-001616	SR60-15	-15 V	TH
UPS16	DPS-001618	SR110-5	+5 V	PBRL+5
UPS17	DPS-001614	SR60-5	+5 V	PB+5
UPS18	DPS-001614	SR60-5	-5.2 V	PB-5.2
UPS19	DPS-001904	SR35-15	+15 V	PB+15
UPS20	DPS-001904	SR35-15	-15 V	PB-15
UPS21	DPS-001747	SR60-65	+60 V	DPU+60
UPS22	DPS-001747	SR60-65	-60 V	DPU-60
UPS101	WBL-PS3750W or KH9-9810 (Note 4)			
UPS102	WBL-PS3750W			
UPS103	WBL-PS3750W			

Note1: Turned on or off in sync with the TC power supply.

Note2: Turned on or off in sync with the MF power supply.

Note3: Turned on or off in sync with the SYS MON power supply.

Note4: For a configuration of 256 pins or less, install the blank panel (KH9-9810).
For a configuration of 257 pins or more, install WBL-PS3750W.

Table 6-2 Specifications of Unit Power Supplies

UPS	Power Supply Name	Advantest Standard Name	Remarks
TH BPS1	WUN-9V2R5V2BDM5VA	WUN-9V2R5V2BDM5VA	Used for TH (at 512 pin)
TH BPS2	WUN-9V2R5V3V2R5V5VA	WUN-9V2R5V3V2R5V5VA	Used for TH (at 256 pin)
TH BPS3	WUN-5V2R5V5V2R5V3VA	WUN-5V2R5V5V2R5V3VA	Used for TH (less than 128 pin)
TH BPS4	WUN-9V2R5V3V2R5V5VA	WUN-9V2R5V3V2R5V5VA	Used for TH (ess than 128 pin)
TH BPS5	WUN-9V5V2B2R5V2BA	WUN-9V5V2B2R5V2BA	Used for TH (at 384 pin)

7 BOARD LOCATION

TC4 mounting board

Table 7-1 TC4 Mounting Board Location

SLOT NO.	BOARD NO.	CIRCUIT NAME	REMARKS
1		EMPTY	
2		EMPTY	
3	BGK-025646	TC4 TBUS I/F	
4	WBL-H36770ATC4	TC4	***Note 1:Check the memory board capacity when replacing the board. Additional memory H3-6775 (UPPER) Additional memory H3-6776 (MIDDLE)***
5			
6			
7	BGK-025647	TC4 SYS-MON	
8		EMPTY	
9	H3-6815	2nd GPIB-VME	OPTION ***Note 2:Carefully set the mini jumpers and DIP switches when replacing or installing the board. (Refer to Chapter APPENDIX 3., "SETTING GPIB-VME (H3-6815) MINI JUMPERS AND DIP SWITCHES.")***
10		EMPTY	
11	H3-6815	1st GPIB-VME	***Note 3:Carefully set the mini jumpers and DIP switches when replacing the board. (Refer to Chapter APPENDIX 3., "SETTING GPIB-VME (H3-6815) MINI JUMPERS AND DIP SWITCHES.")***
12	BGK-025648	TC4 BUS I/F	
13	WBL-H36770AENG	ENGINE-50	***Note 4:Check the memory board capacity when replacing the board. Additional memory H3-6775 (UPPER)***
14			
15			

DPU mounting board

Table 7-2 DPU Mounting Board Location

SLOT NO.	BOARD NO.	CIRCUIT NAME	REMARKS
1	WUN-11V2B15V2B18V	DC PS1	
2	WUN-11V2B5V3B	DC PS2	
3	BGR-024897	DPS CONT	
4	BGR-023715X02	DPS 2A 1-8	
5	BGR-024897	DPS CONT	
6	BGR-023715X02	DPS 2A 9-16	
7	BGR-024897	DPS CONT	
8	BGR-023715X02	DPS 2A 17-24	
9	BGR-024897	DPS CONT	
10	BGR-023715X02	DPS 2A 25-32	
11	BGR-026245	IF L	
12	BGR-023713X02	UDC	
13	BGR-023712	UDC CONT	
14	BGR-026240	BUS IF	
15	Option		
16	BGR-023711X02	MDC1	1-128 ch TH1 (Use revision number BGC or later)
17	BGR-023711X02	MDC2	129-256 ch TH1 (Use revision number BGC or later)
18	BGR-023711X02	MDC3	257-384 ch TH1 (Use revision number BGC or later)
19	BGR-023711X02	MDC4	385-512 ch TH1 (Use revision number BGC or later)

Monitor I/F mounting board

Table 7-3 Monitor I/F Mounting Board Location

SLOT NO.	BOARD NO.	CIRCUIT NAME	REMARKS
1	BGR-024885X03	Monitor I/F	

TH mounting board

Table 7-4 TH Mounting Board Location

SLOT NO.	BOARD NO.	CIRCUIT NAME	REMARKS
1	WUN-9V2R5V2BDM5VA	BPS1	Required for a configuration of 512 pins.
2	WUN-9V2R5V3V2R5V5VA	BPS2	Required for a configuration of 256 pins.
3	WUN-5V2R5V5V2R5V3VA	BPS3	
4	BIS-025826	STICK	for T6573
	BIS-025826X02		for T6563
	BIS-025826X03		for T6533
5	BIR-026229	SQPG	
6	BIR-026230	OPPG	OPTION(SCPG4G)
	BIR-026230X02		OPTION(SCPG16G)
	BIR-026230X03		OPTION(SCPG4G+ALPG)
	BIR-026230X04		OPTION(SCPG16G+ALPG)
	BGR-026350		Required for a configuration without the optional PG board.
	BIR-027902		OPTION (SCPG4G+ALPG+AFM -compatible)
	BIR-027902x02		OPTION (SCPG16G+ALPG+AFM -compatible)
7	BMS-025853(STE16MW) BMS-025853X02 (STE64MW) Both boards cannot be installed at the same time.	PE08	417-448, 481-512 ch
8		PE06	289-320, 353-384 ch
9		PE04	161-192, 225-256 ch
10		PE02	33-64, 97-128 ch
11		PE01	1-32, 65-96 ch
12		PE03	129-160, 193-224 ch
13		PE05	257-288, 321-352 ch
14		PE07	385-416, 449-480 ch
15	BGS-026357	TERM	Required for a configuration without the optional IDDQ board.
	WUN-T6500IDDQ	IDDQ	OPTION
16	BMR-026338	DCAP	OPTION (STE16MW-compatible)
	BMR-026338X02		OPTION (STE64MW-compatible)
	BIS-029368		OPTION (STE 16MW+AFM-compatible)
17	BIS-026339	DA/AD	OPTION (1M Sampling)
	BIS-026339X02		OPTION (500k Sampling)
18	BGS-026241	CONTACT	
	BIS-029624	HSC_CONTACT	OPTION (HSCLK Op.)
19	WUN-9V2R5V3V2R5V5VA	BPS4	
20	WUN-9V5V2B2R5V2BA	BPS5	Required for a configuration of 384 pins.

8. WIRING DIAGRAM

8.1 Signal Wiring

Board Name	TC4 BUS I/F	BUS IF	SQPG	STICK	BUS IF	DPU IFL	TC4 BUS I/F
Board No.	BGK-025646	BGR-02	BIR-026229	BIS-025826 (T6573) BIS-025826X02 (T6563) BIS-025826X03 (T6533)	BGR-026240	BGR-024899	BGK-025646
Slot No.	3	14	5	4	14	11	3
Unit Name	TC4	DPU	TH	TH	DPU	DPU	TC4
Connection	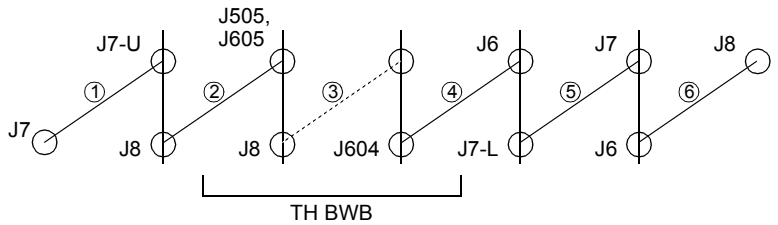 ① DCB-RR7324X06 ② DCB-SSC711X01 ③ TH BWB pattern wiring ④ DCB-SSC710X01 ⑤ DCB-RR7324X03 ⑥ DCB-RR7324X06						

Figure 8-1 Tester Bus Cable Connection

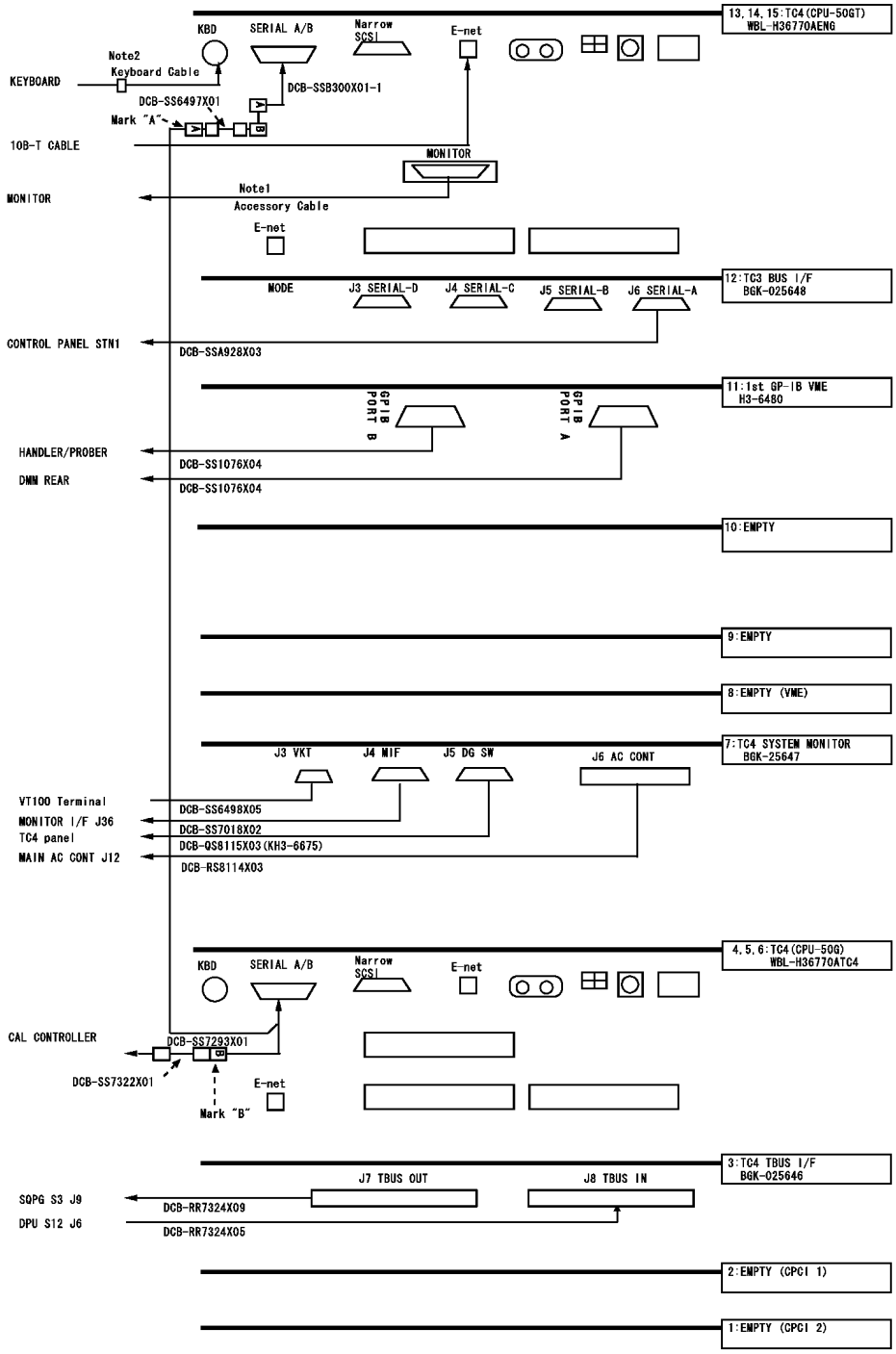

Note1: V0105C:DCB-FS9801X02
V0108: DCB-SSC037X01

Note2: V0105C:DCB-SSB325X01
V0108: None

The items listed below are not shown in the above diagram.

- ***AAA-DM7100F40-1 (SCSi TERMINATOR)***
- ***DCB-SS6499X01 (TC-EWS CONV.)***
- ***DCB-SS7023X06 (TC SERIAL DIAG)***

} ***These parts are supplied as standard accessories.***

Figure 8-2 TC4 Unit Wiring (1)

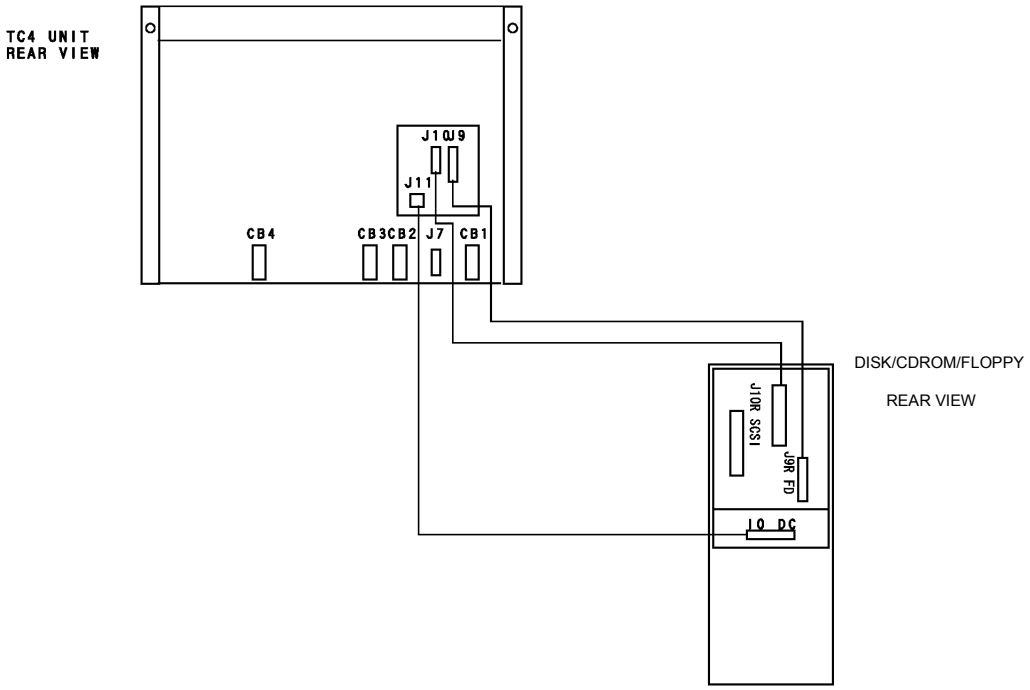

Figure 8-3 TC4 Unit Wiring (2)

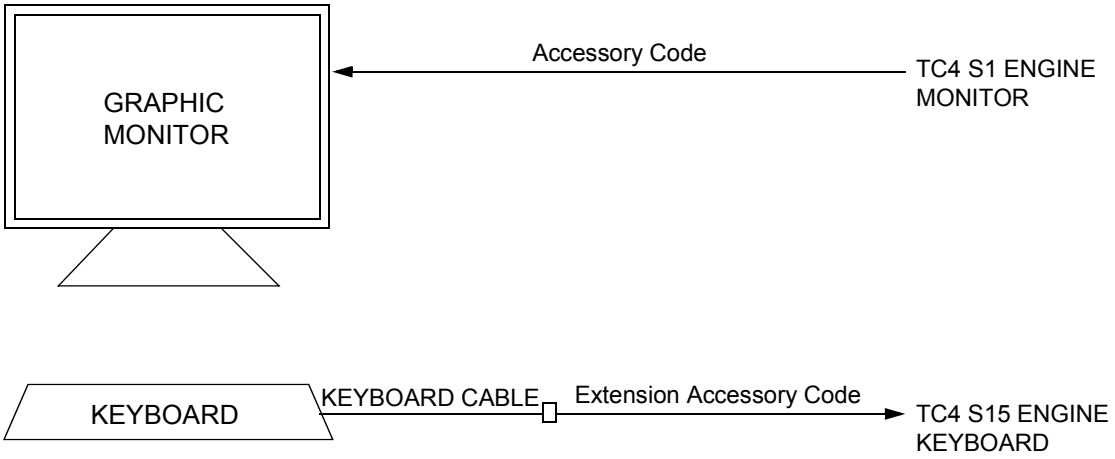

Figure 8-4 TC4 Unit Wiring (3)

8.1 Signal Wiring

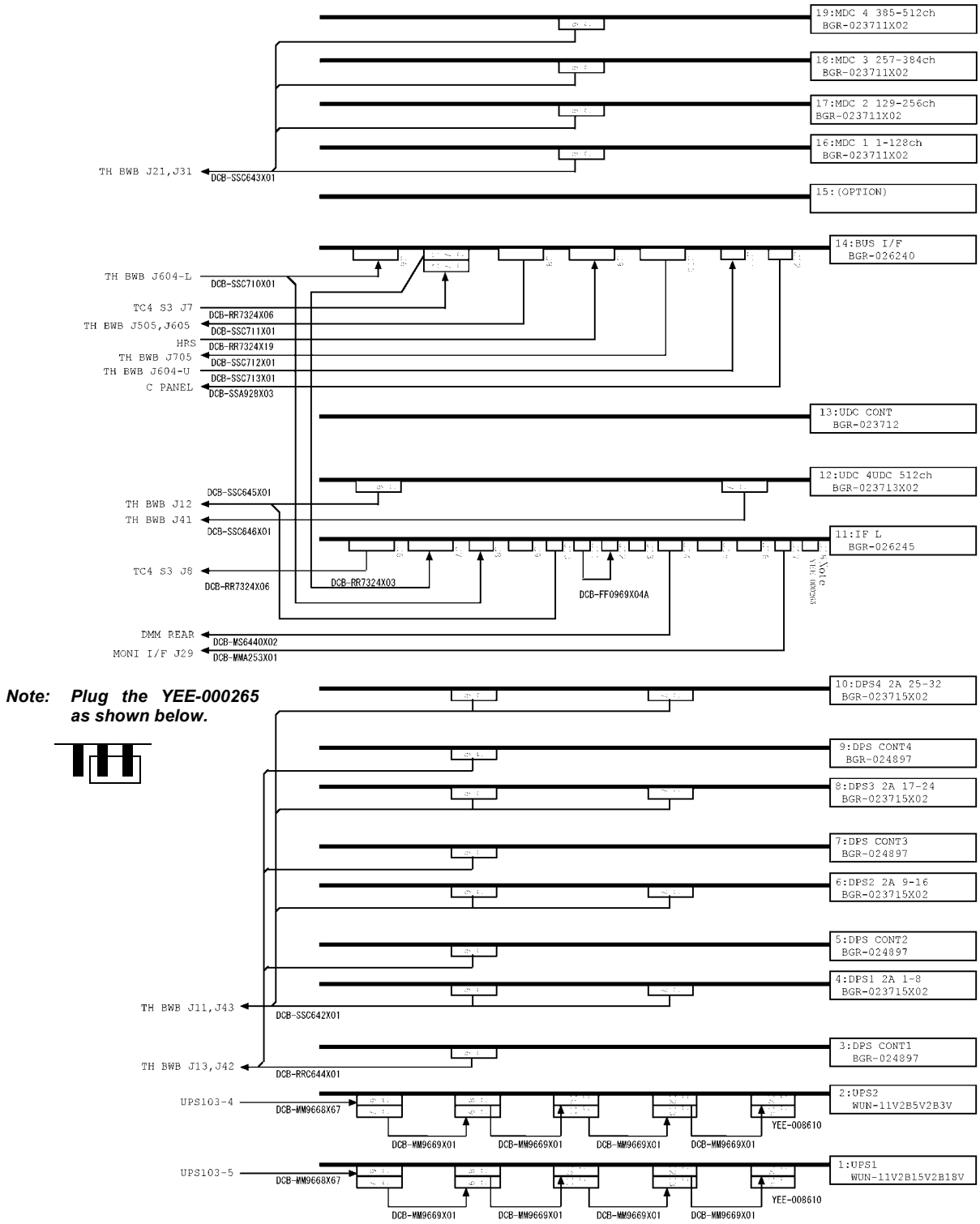

Note: Plug the YEE-000265 as shown below.

Figure 8-5 DPU Cable Connection

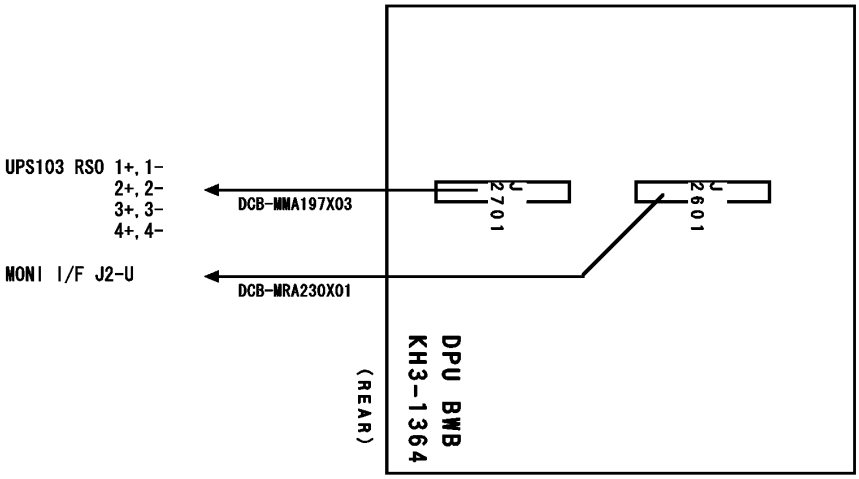

Figure 8-6 DPU Cable Connection (DPU BWB)

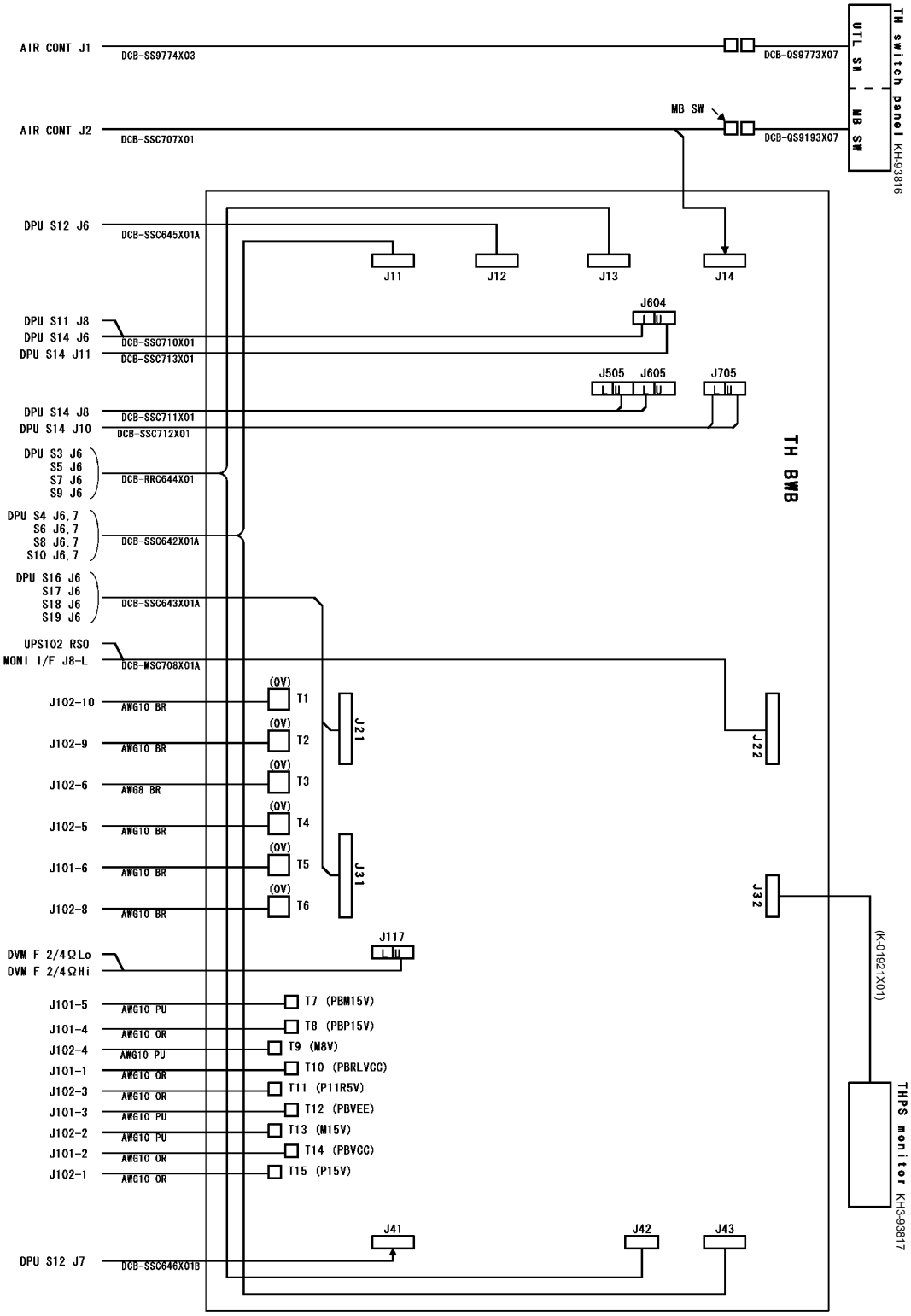

Figure 8-7 TH BWB Cable Connection (1)

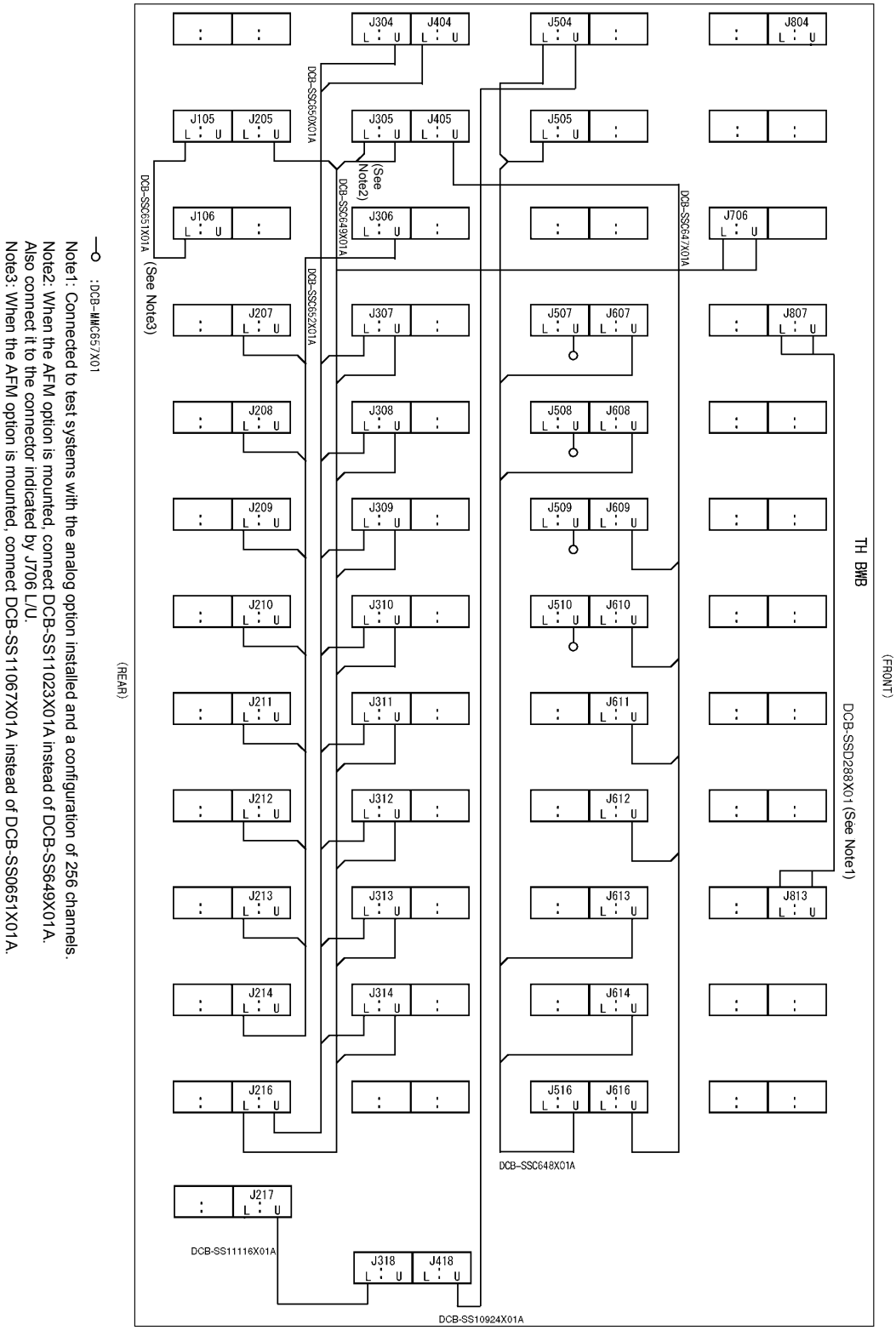

Figure 8-8 TH BWB Cable Connection (2)

8.1 Signal Wiring

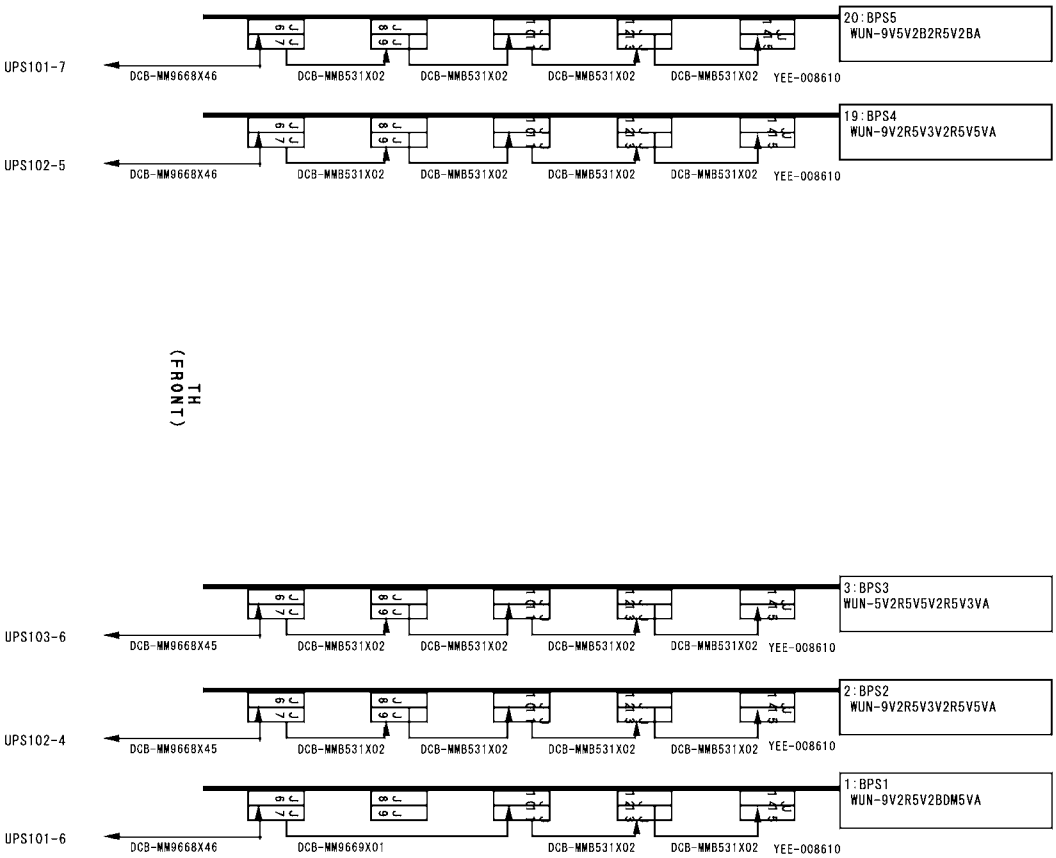

Figure 8-9 THU Cable Connection (TH BPS)

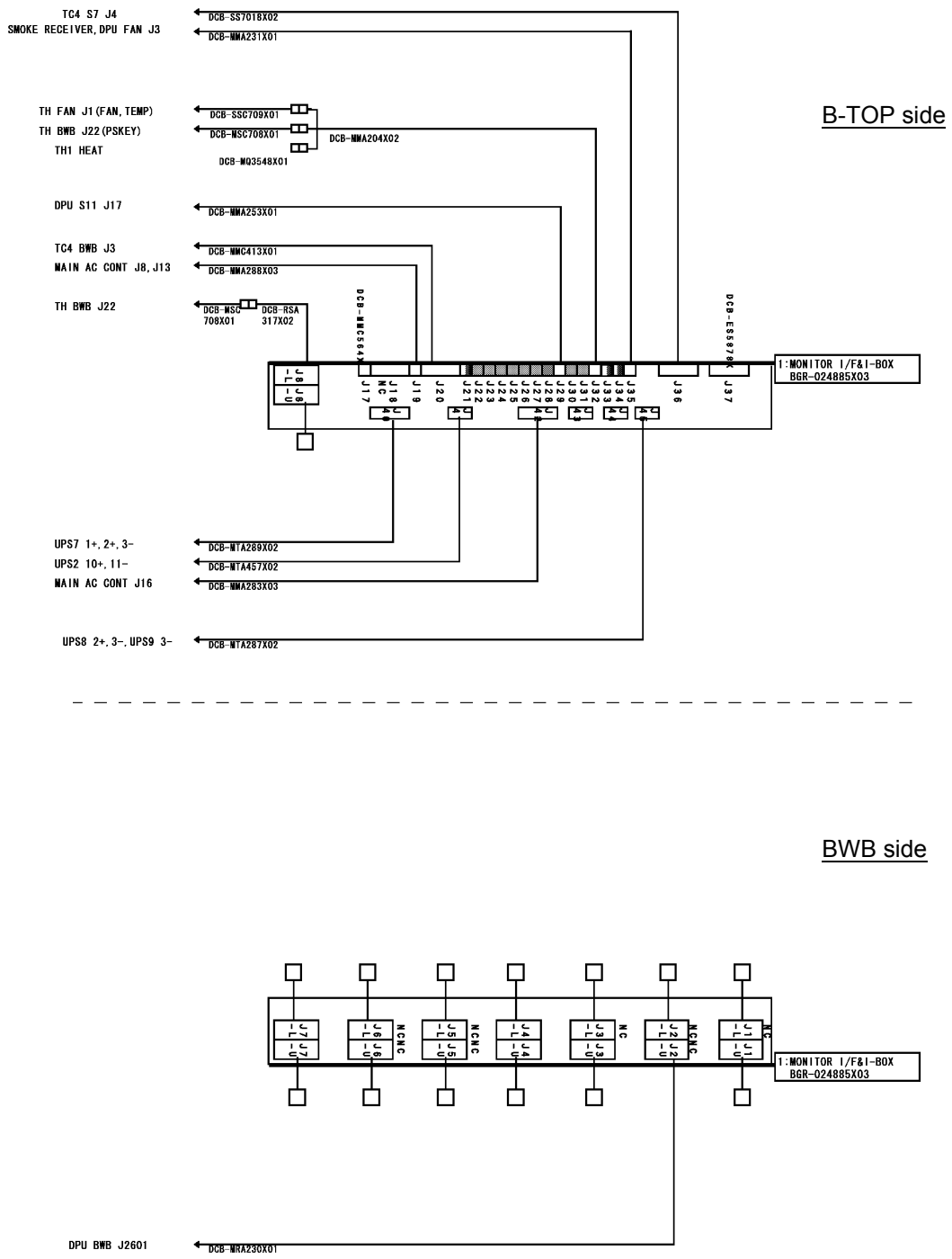

Note: ***Plug the short connector DCB-MMA250X01 on the J34,J21 and J33.***
Plug the short connector DCB-MMA251X01 on the J22,J23,J24,J25,J26,J27,J28,J30 and J31.

Figure 8-10 MONITOR I/F Cable Connection

8.2 Power Supply Wiring

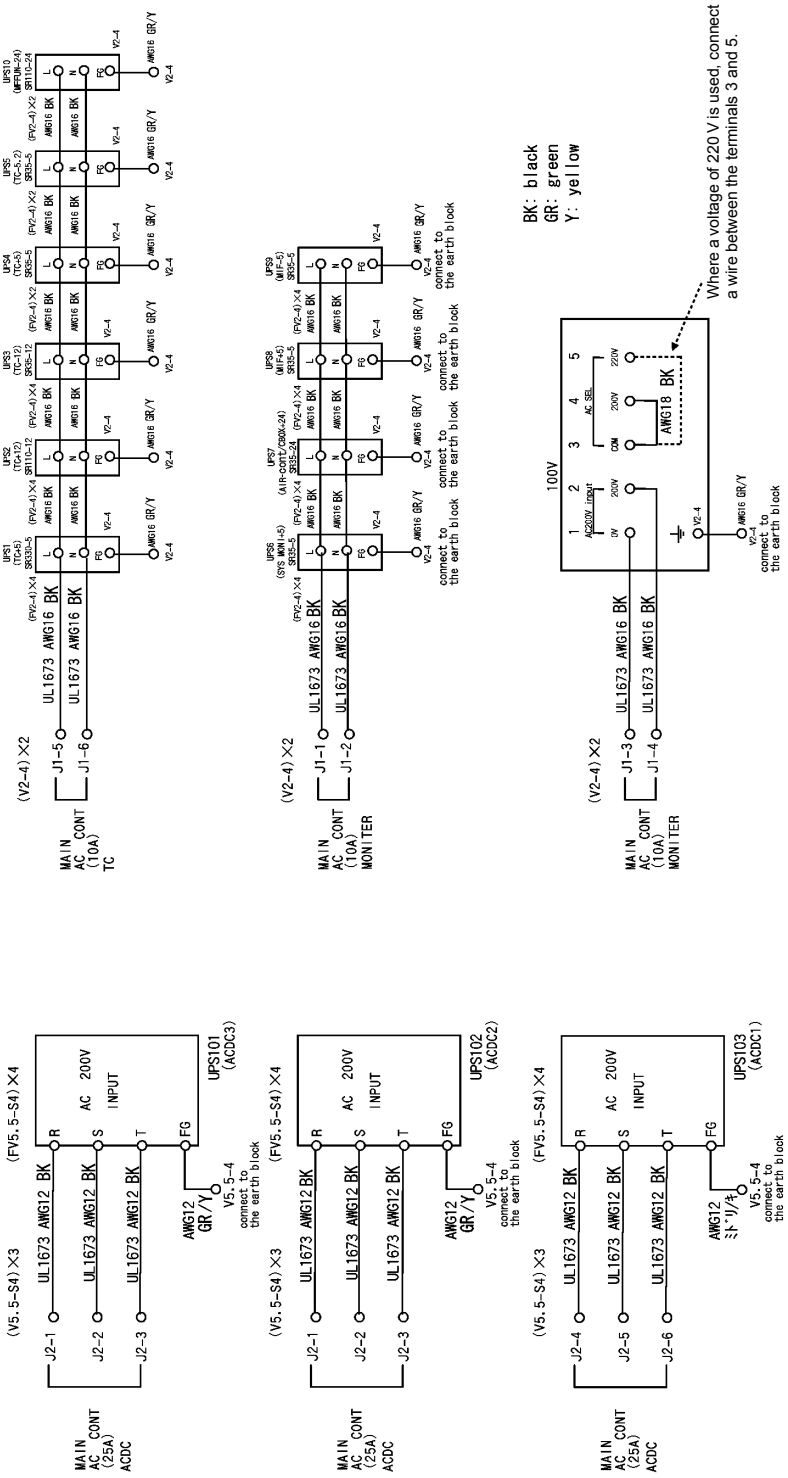

Note1: *Use AWG16 black and AWG12 black wires of double insulation type (UL1673).*

Note2: *Verify that no short piece is installed between the A and B terminals on the SR power supply. (For an input voltage of 200 V)*

Note3: *For the SR power supplies UPS10, UPS9, UPS8, UPS6, UPS1, UPS2, UPS3 and UPS7, attach the short piece between the terminals TOG and CNT for each power supply. (Not for the sequence control)*
Remove the short piece between the terminals TOG and CNT on the SR power supplies UPS4 and UPS5. (For the sequence control)

Note4: *Remove the short piece between the terminals ACG and FG before installing the SR power supply. (To reduce the leak current)*

Figure 8-11 Main Frame 200 VAC Wiring (1)

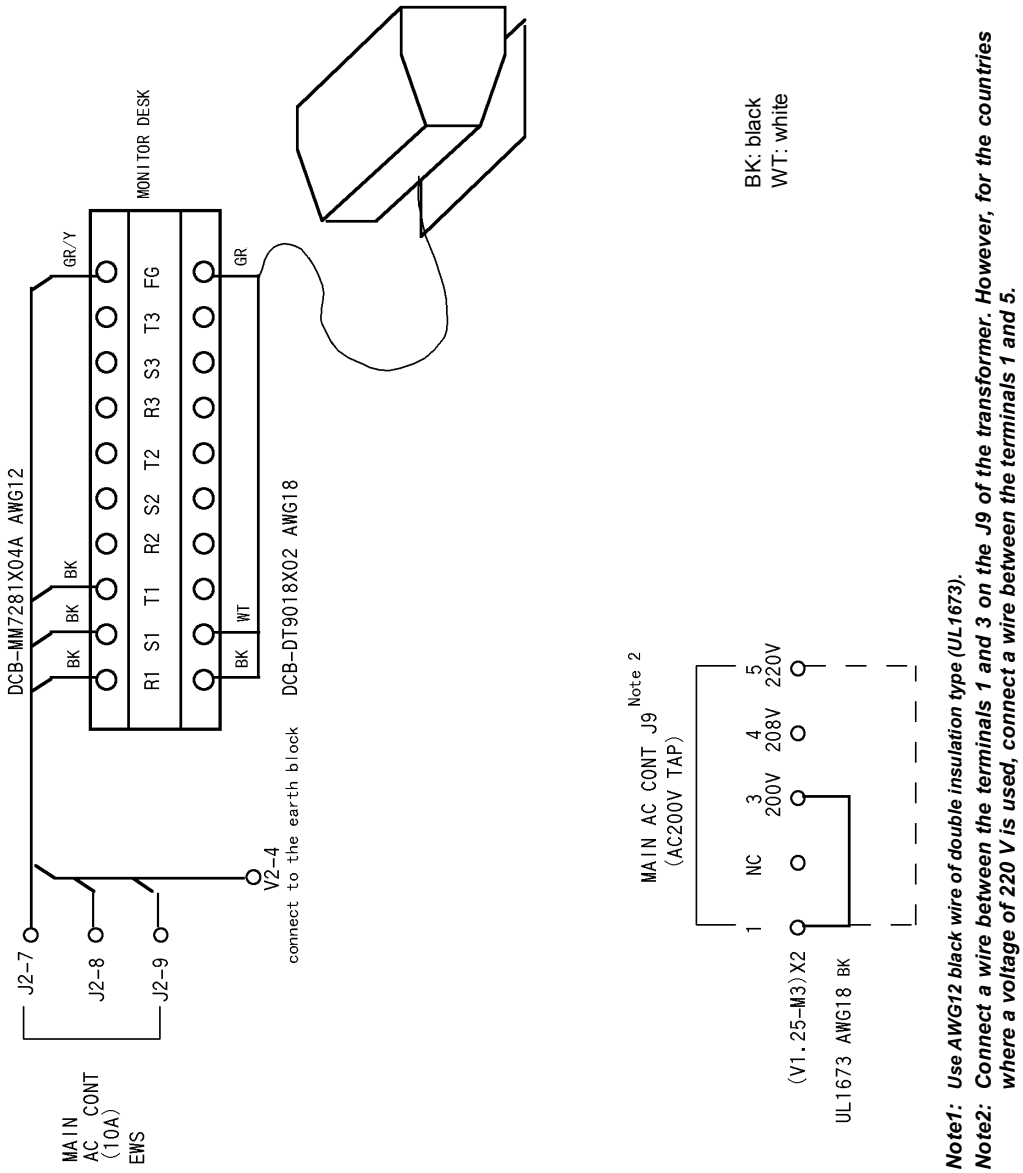

Figure 8-12 Main Frame 200 VAC Wiring (2)

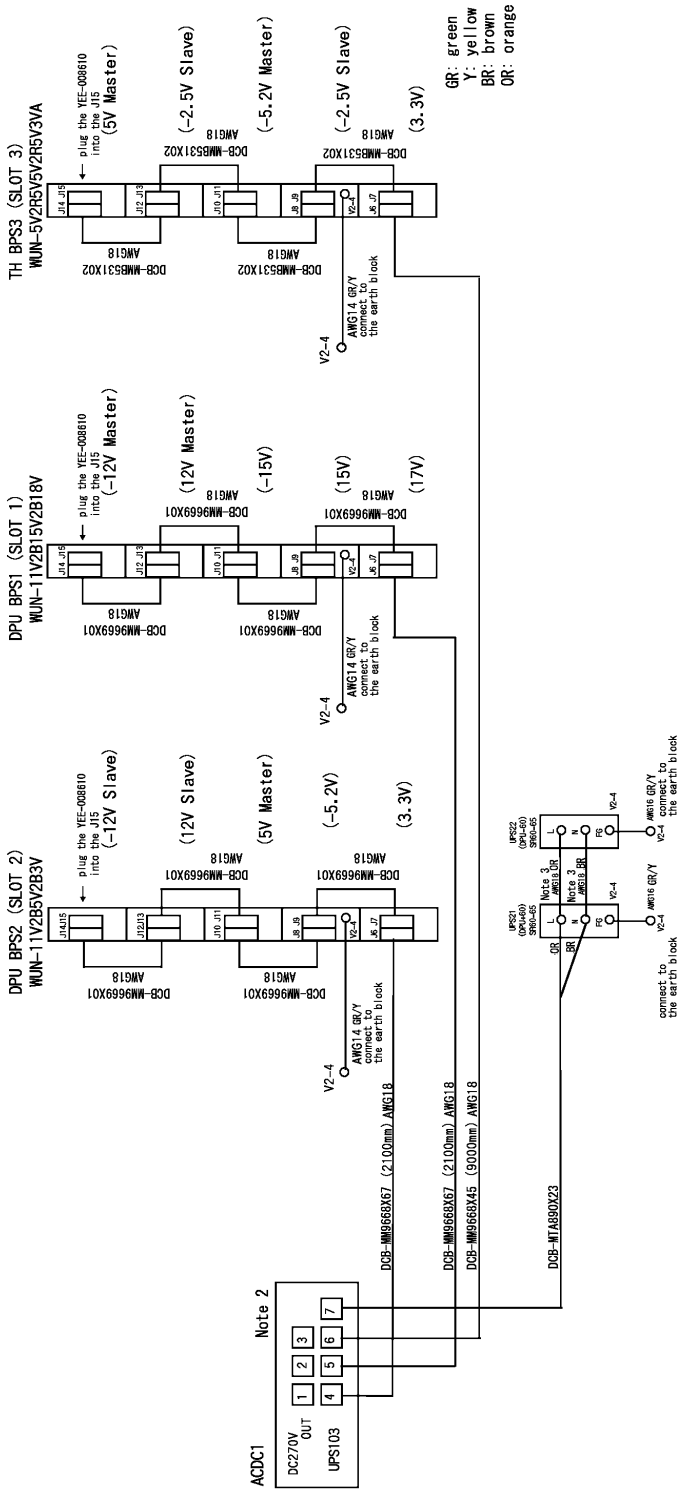

Note1: Verify that no short piece is installed between the A and B terminals on the SR power supply. (For an input voltage of 200 V)

Note2: Plug the YEE-002972-1 in the positions 1, 2 and 3 on the UPS103 (ACDC1).

Note3: Use AWG18 orange and AWG18 brown wires of double insulation type (UL1673).

Figure 8-13 270 VDC Wiring (1)

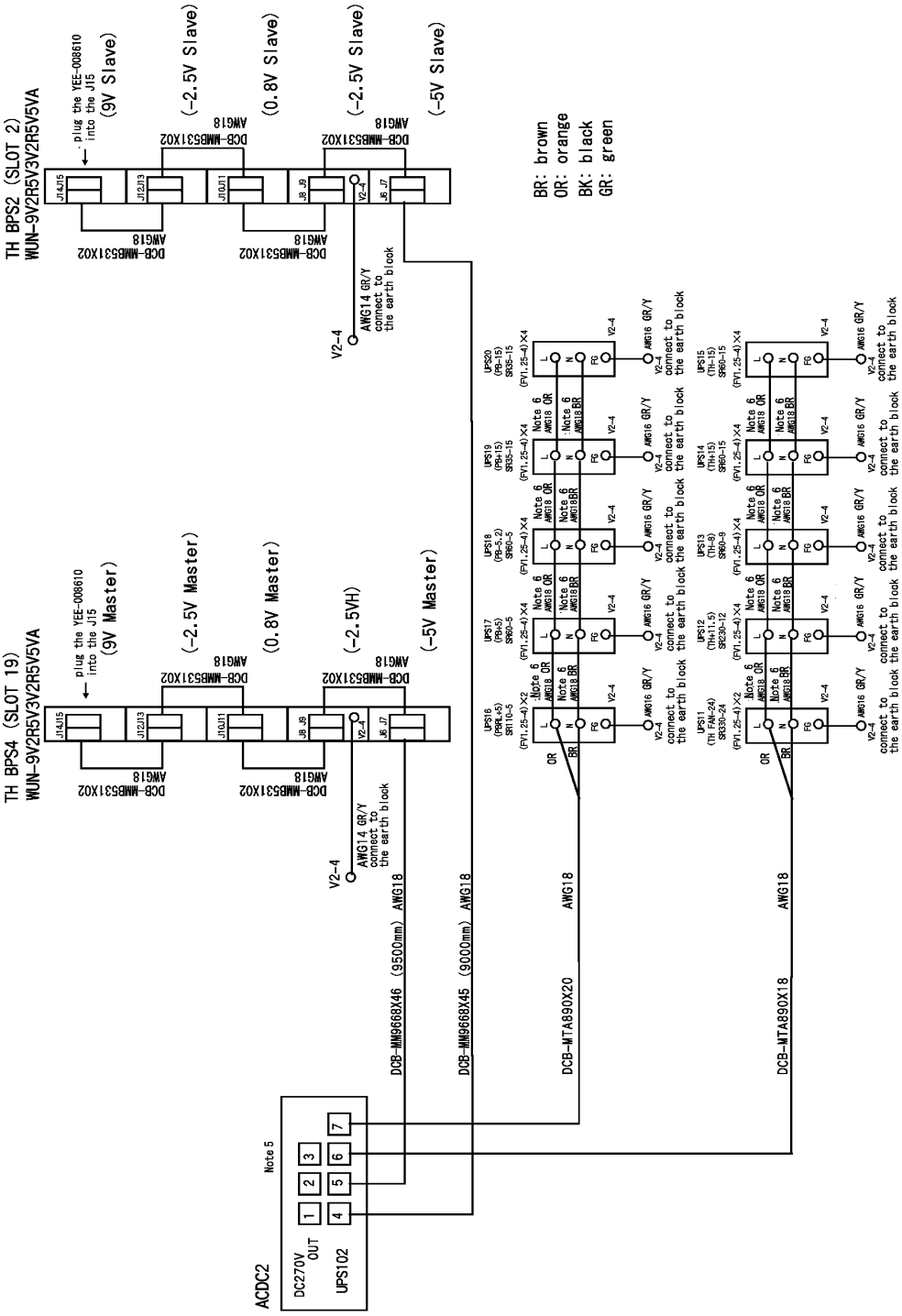

Note1: Verify that no short piece is installed between the A and B terminals on the SR power supply. (For an input voltage of 200 V)
Note2: For the SR power supplies UPS11, UPS12, UPS13, UPS14, UPS15 and UPS16, check that the short piece between the terminals TOG and CNT is removed. (For the sequence control)
Note3: Check that the short piece between the terminals ACG and FG must be removed on the SR power supply. (To reduce the leak current)
Note4: The UPS15 and UPS16 are installed when the TH2 is available.
Note5: Plug the YEE-002972-1 in the positions 5, 6 and 7 on the UPS209 (ACDC2).
In addition, plug the YEE-002972-1 in the position 2 on the UPS209 (ACDC2) when the ALPG UPS8 is not installed.
Note6: Use AWG18 orange and AWG18 brown wires of double insulation type (UL1673).
Note7: For the SR power supply UPS17, check that the short piece between the terminals TOG and CNT is installed. (Not for the sequence control)

Figure 8-14 270 VDC Wiring (2)

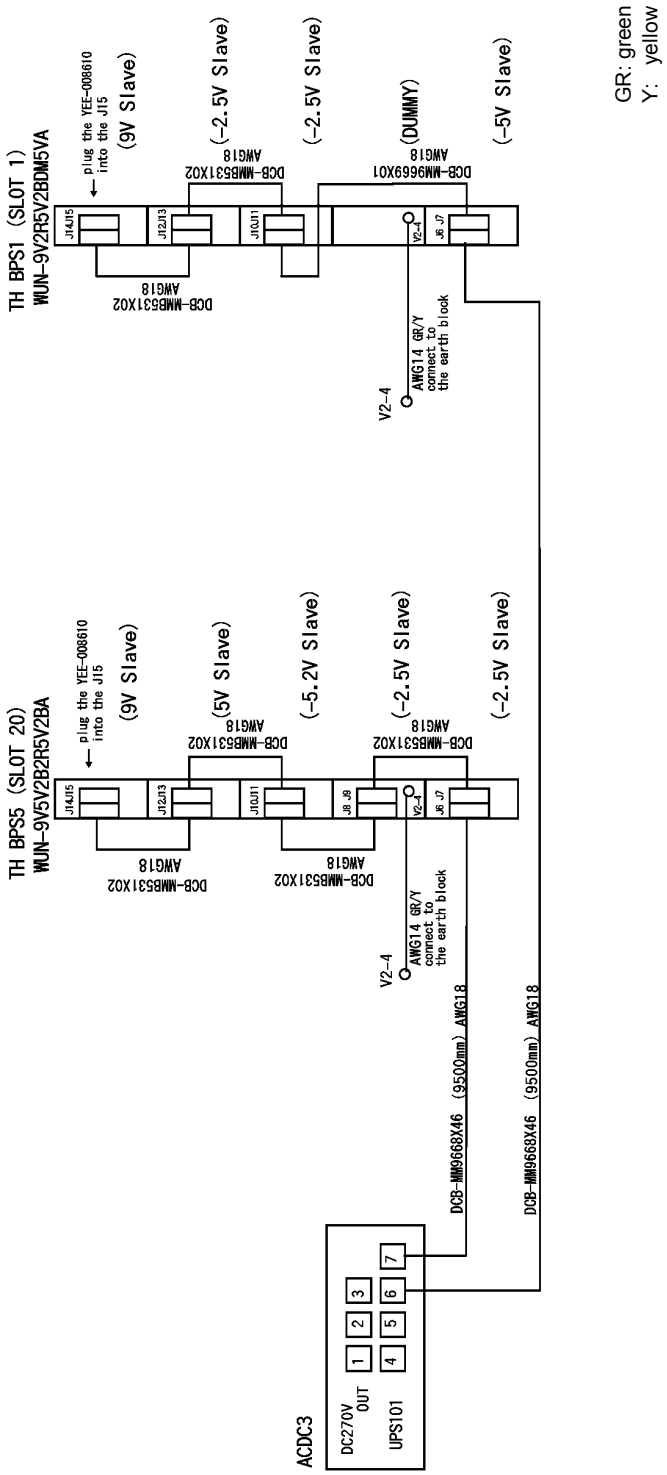

Note: Plug the YEE-002972-1 in the positions 1, 2, 3, 4, 5 and 7 on the UPS101 (ACDC3).
When the TH BPS1 is not installed, plug the YEE-002972-1 in the position 6 on the UPS101.

Figure 8-15 270 DVC Wiring (3)

1. SR Power supplies not used for the Sequence Control
   The power supplies shown below do not use the wire used for the sequence control.
   Connect a short connector to the PJ1.

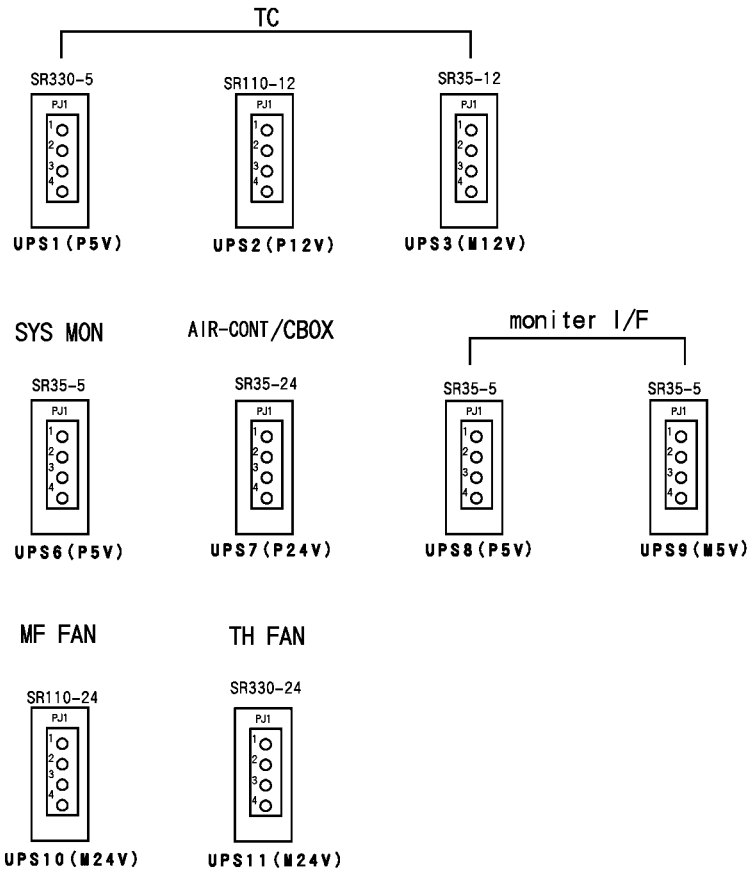

Figure 8-16 System ON/OFF Cable Connection (1)

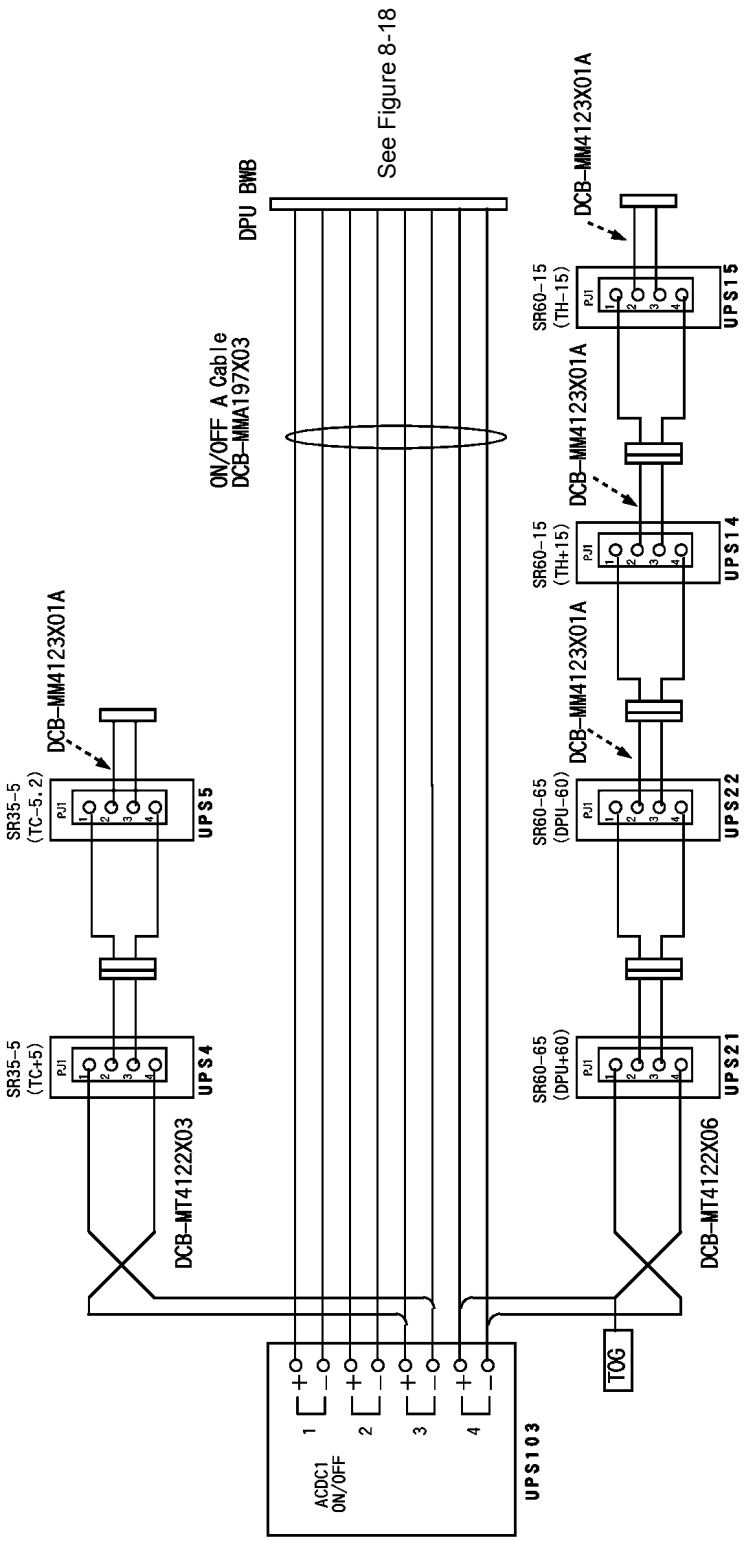

Figure 8-17 System ON/OFF Cable Connection (2)

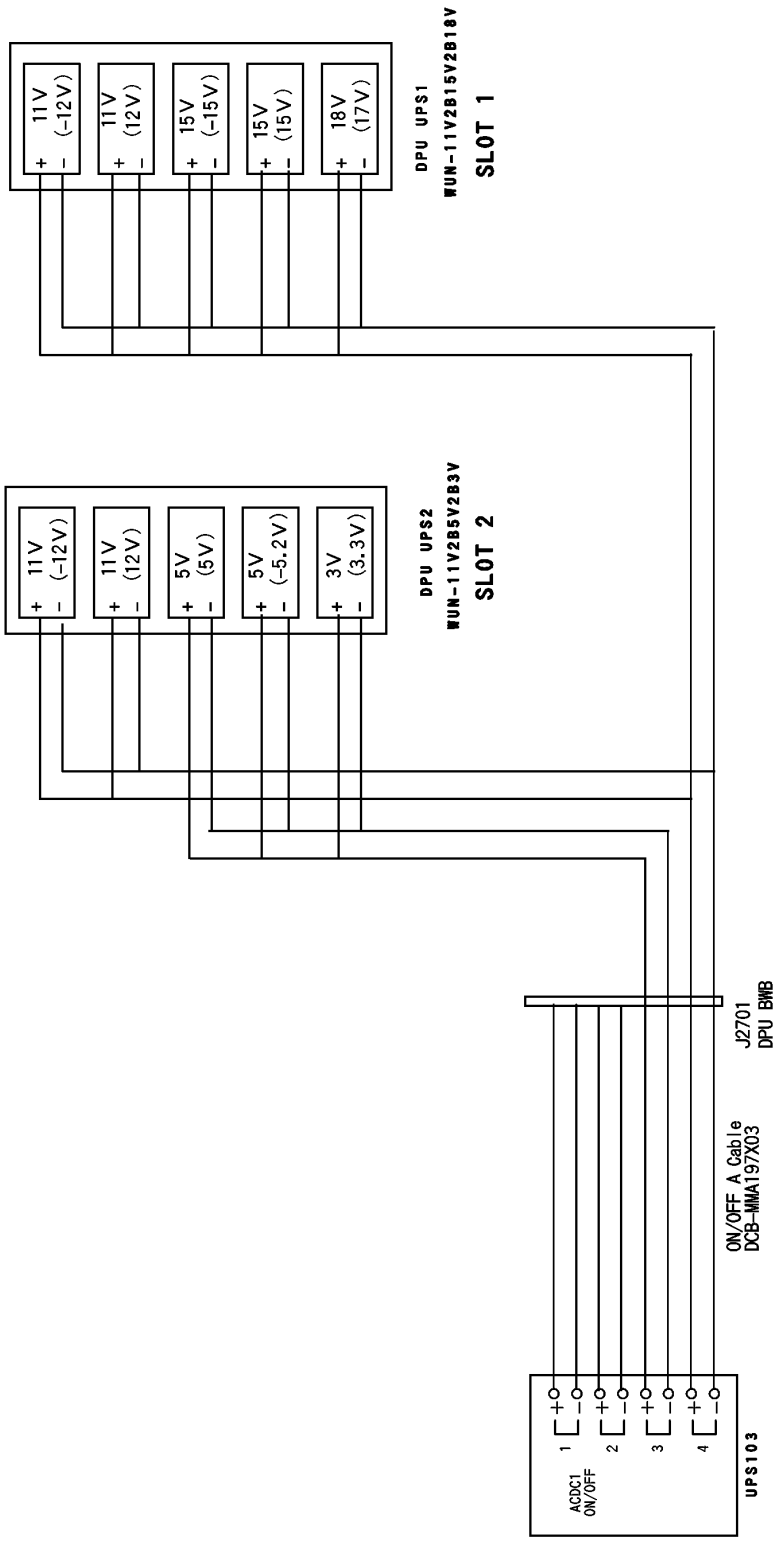

Figure 8-18 System ON/OFF Cable Connection (3)

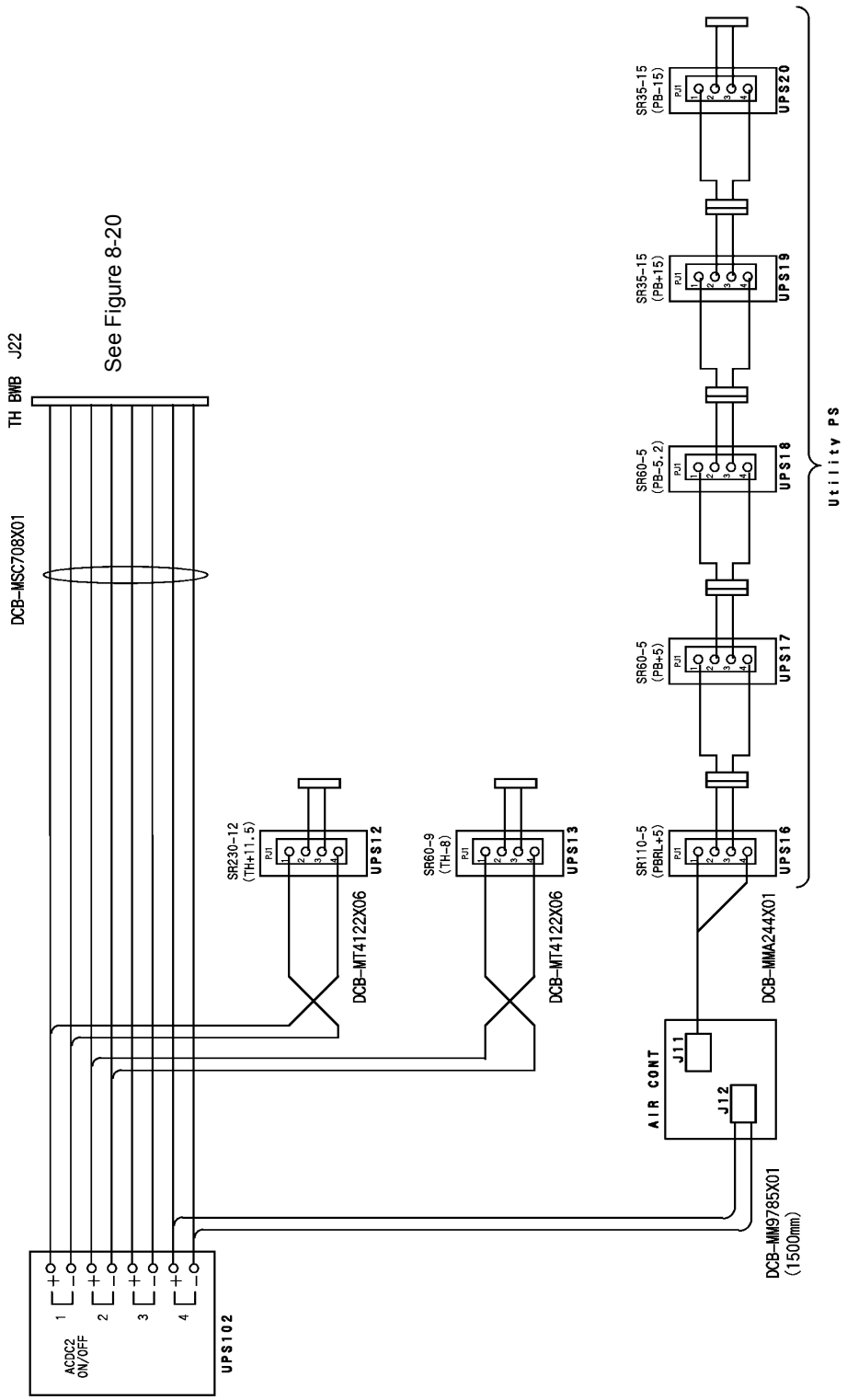

Figure 8-19 System ON/OFF Cable Connection (4)

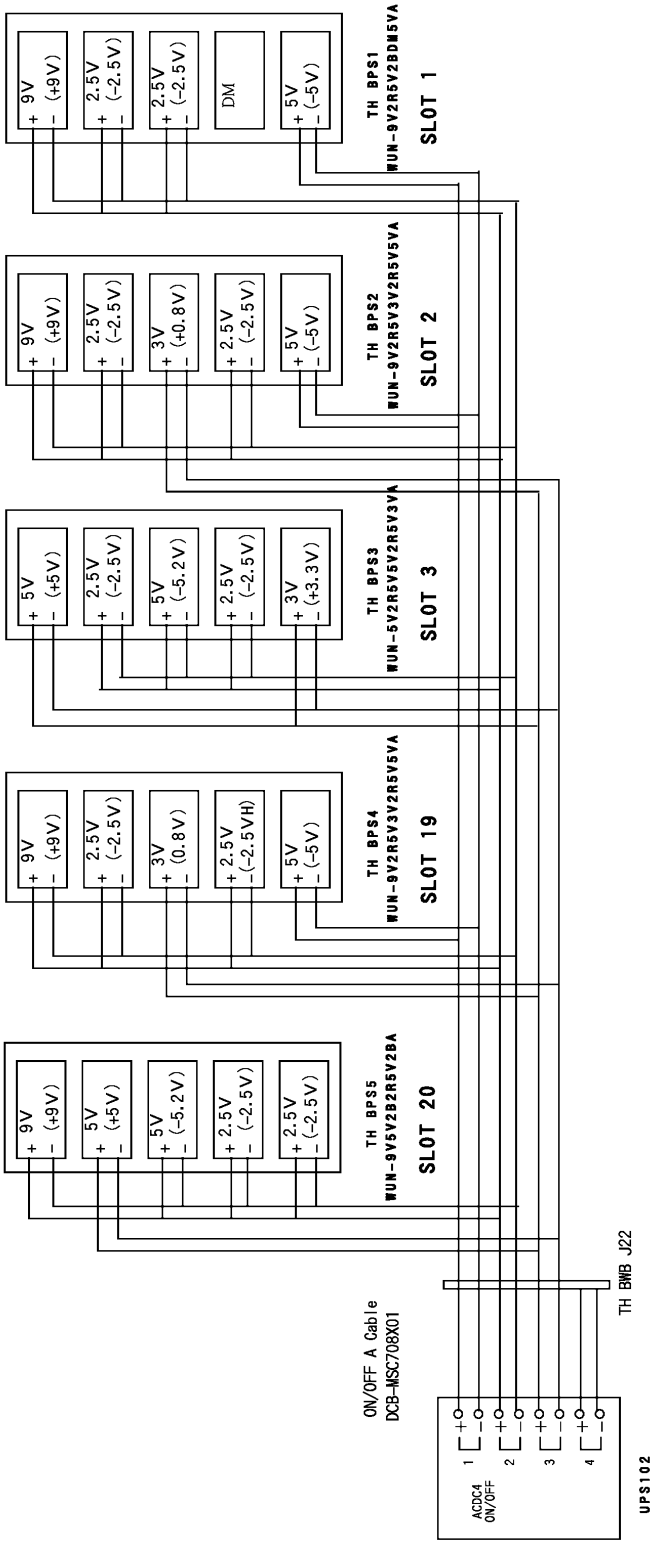

Figure 8-20 System ON/OFF Cable Connection (5)

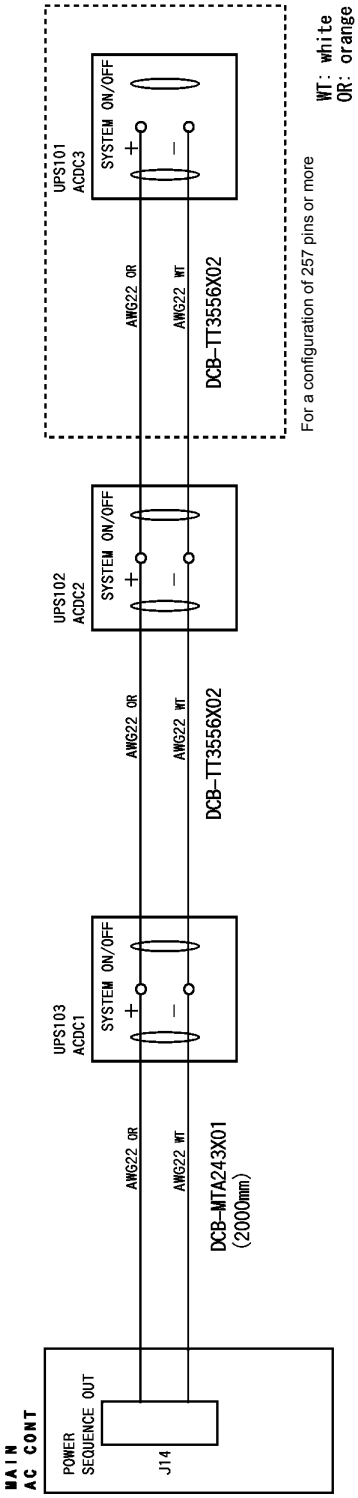

Figure 8-21 System ON/OFF Cable Connection (6)

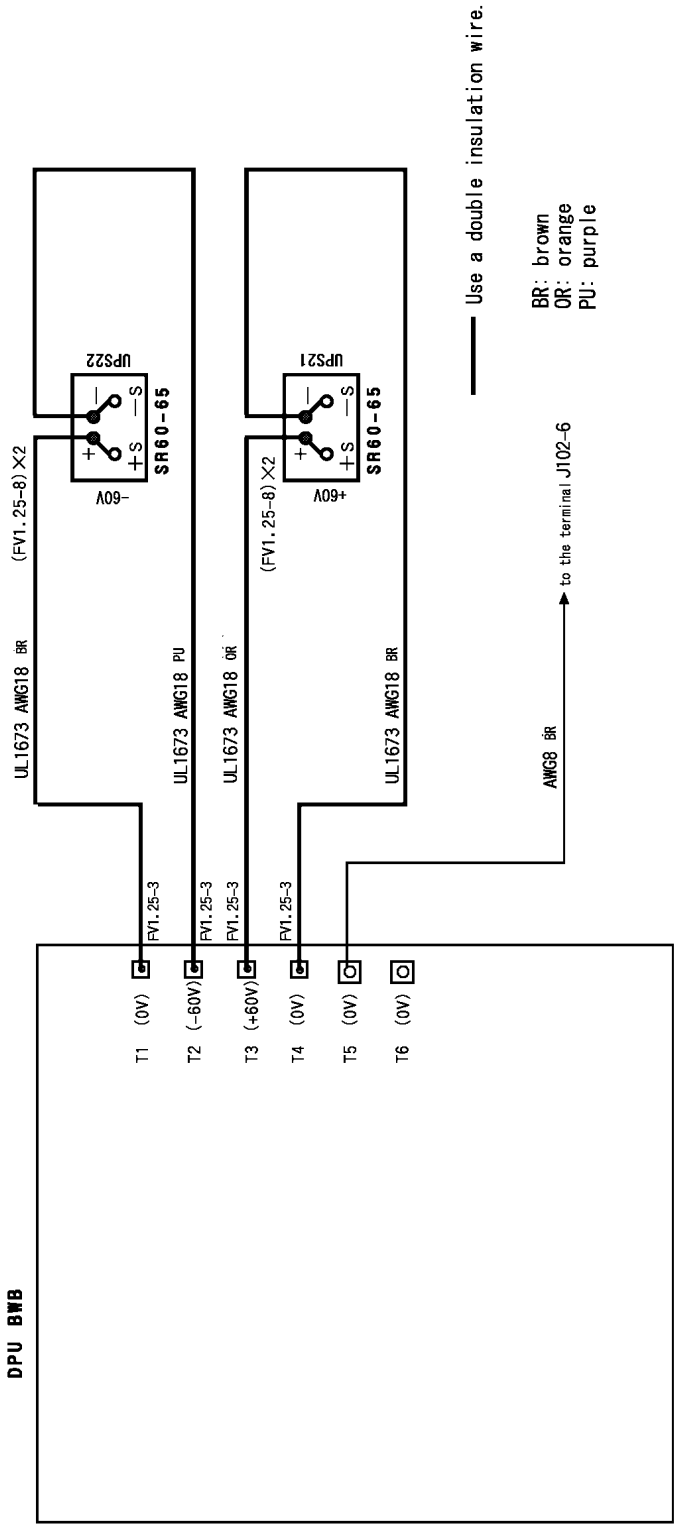

Figure 8-22 DC Wiring (1)

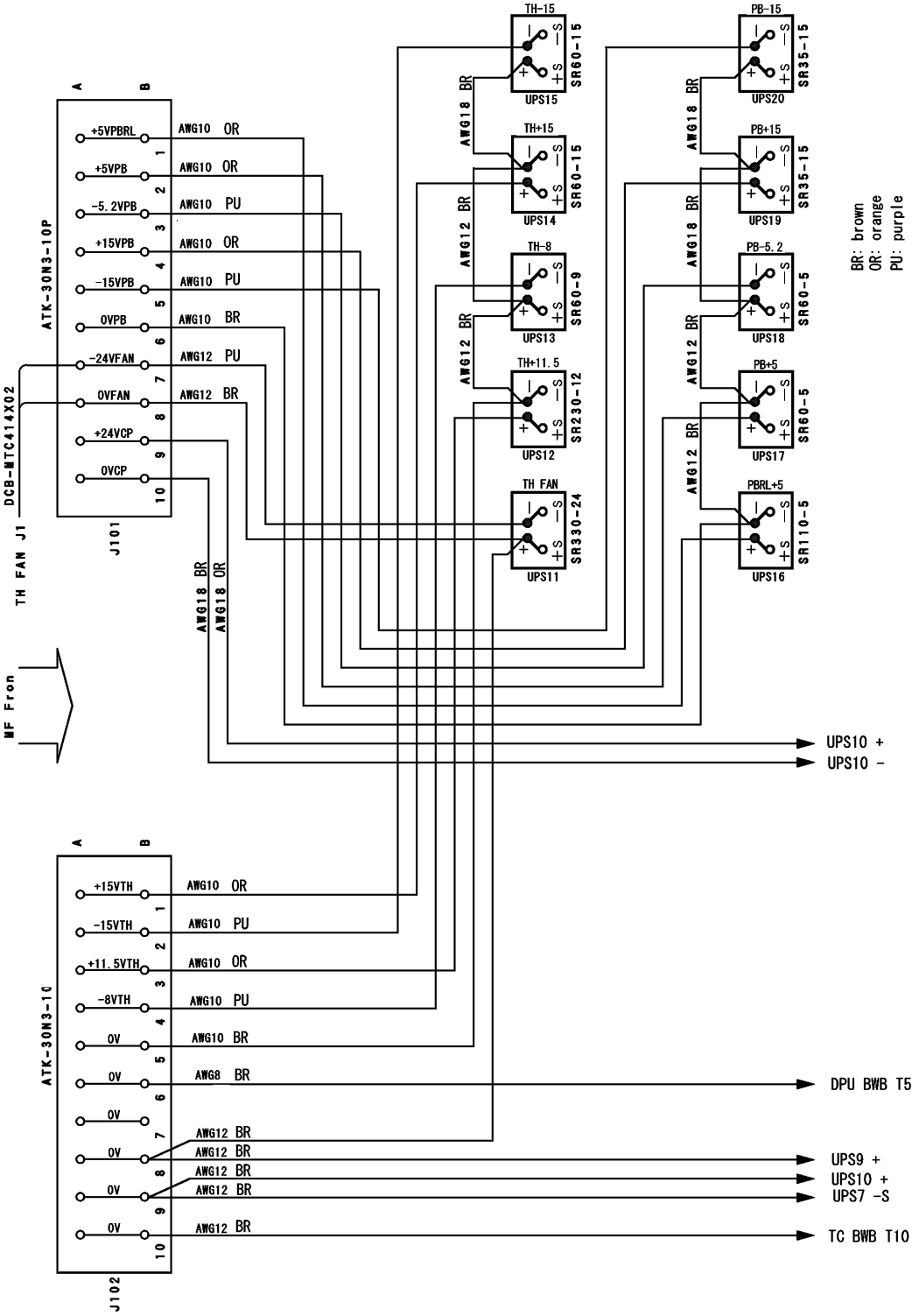

Figure 8-23 DC Wiring (2)

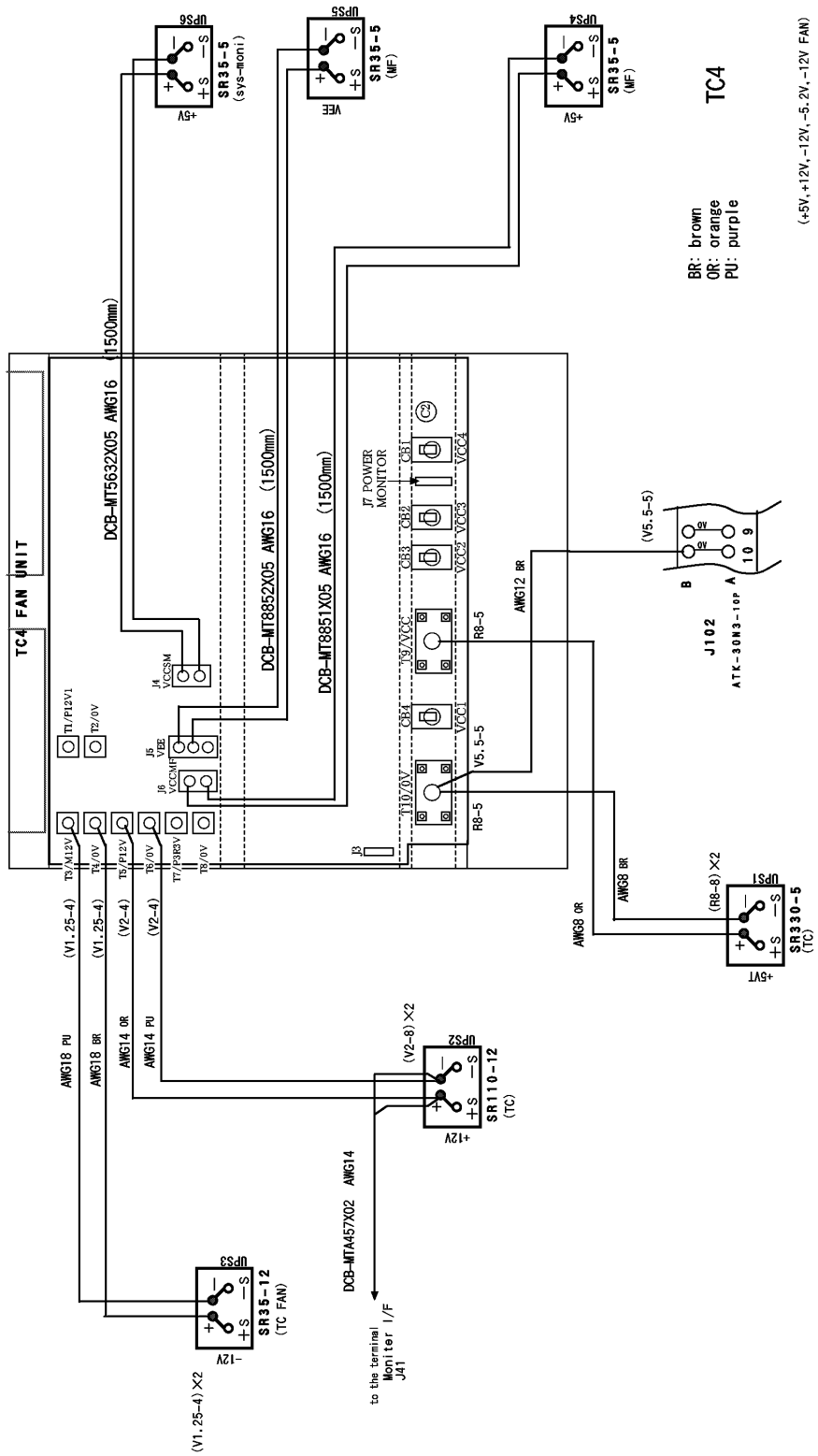

Figure 8-24 DC Wiring (3)

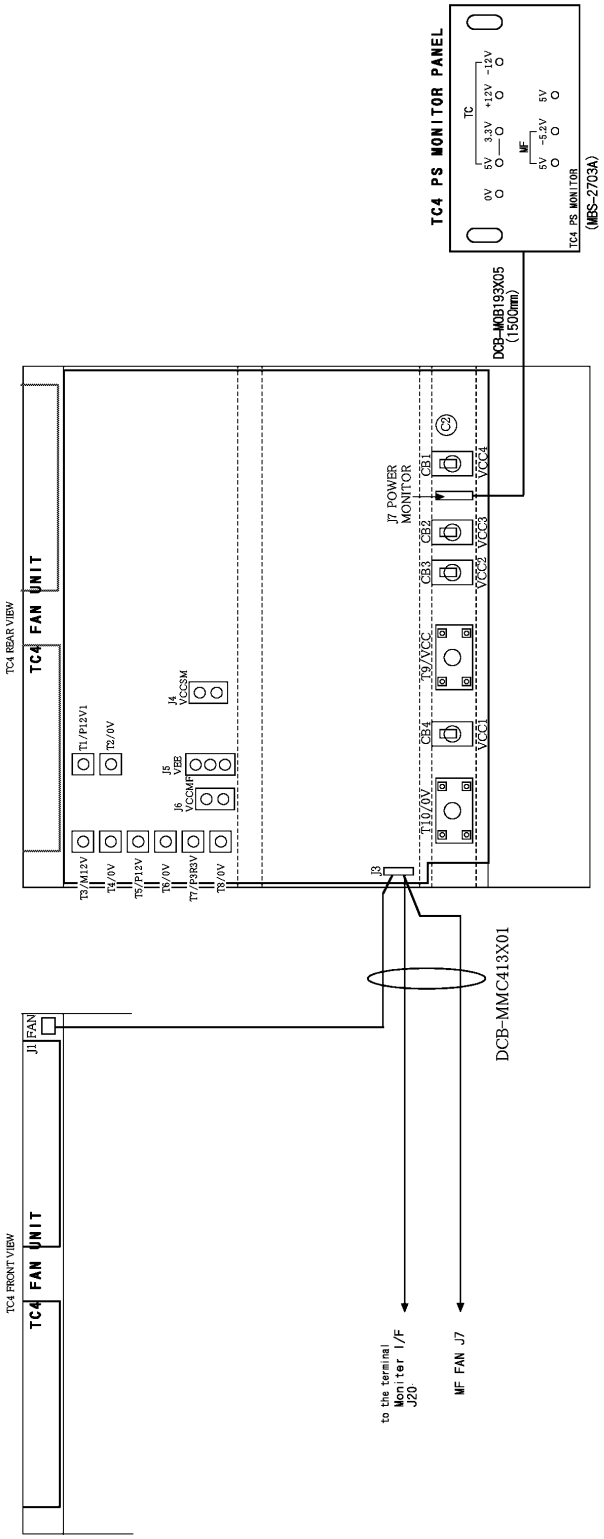

Figure 8-25 DC Wiring (4)

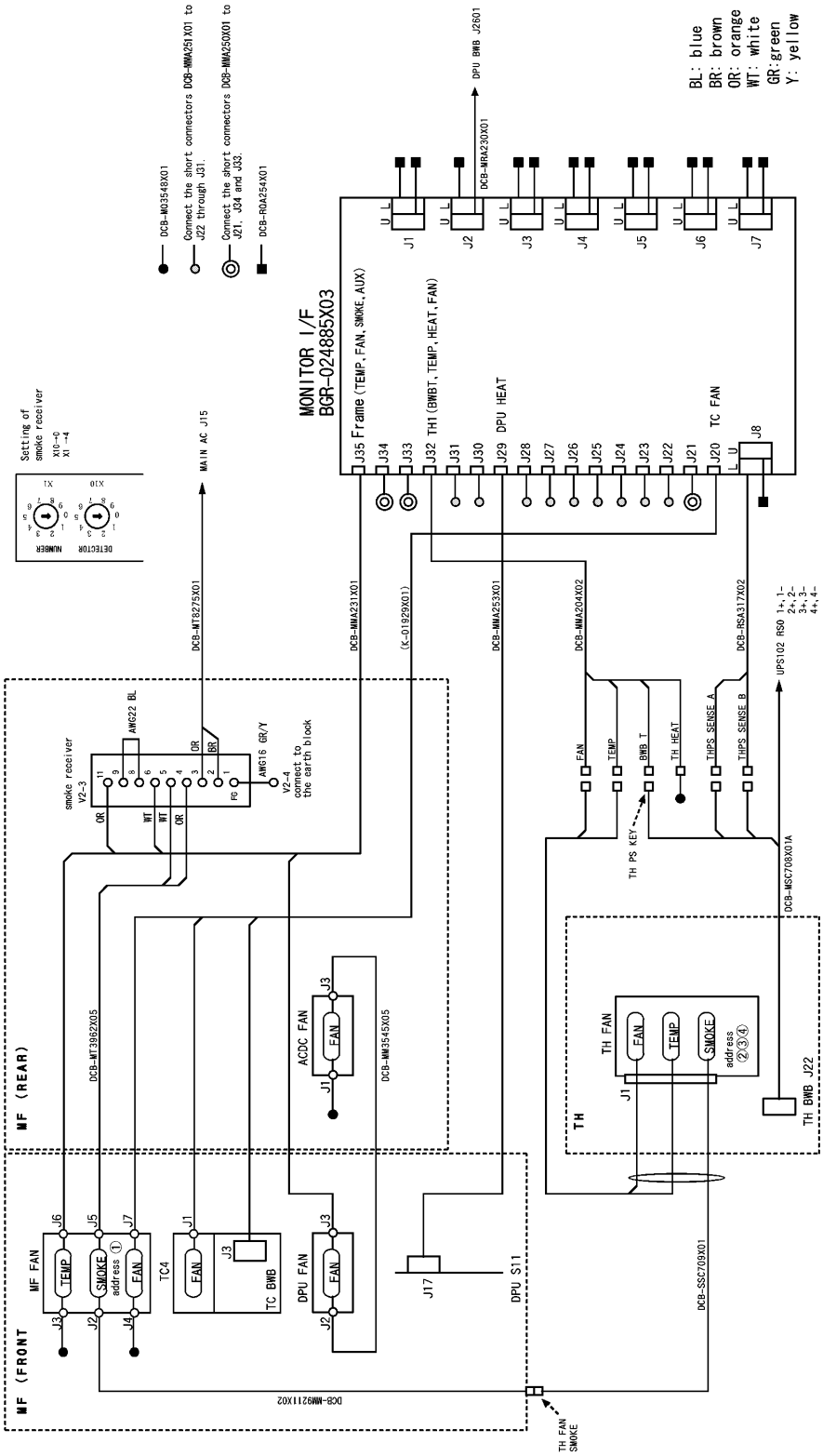

Figure 8-26 Sensor Cable Connection (Smoke, Fan, Temperature Sensor)

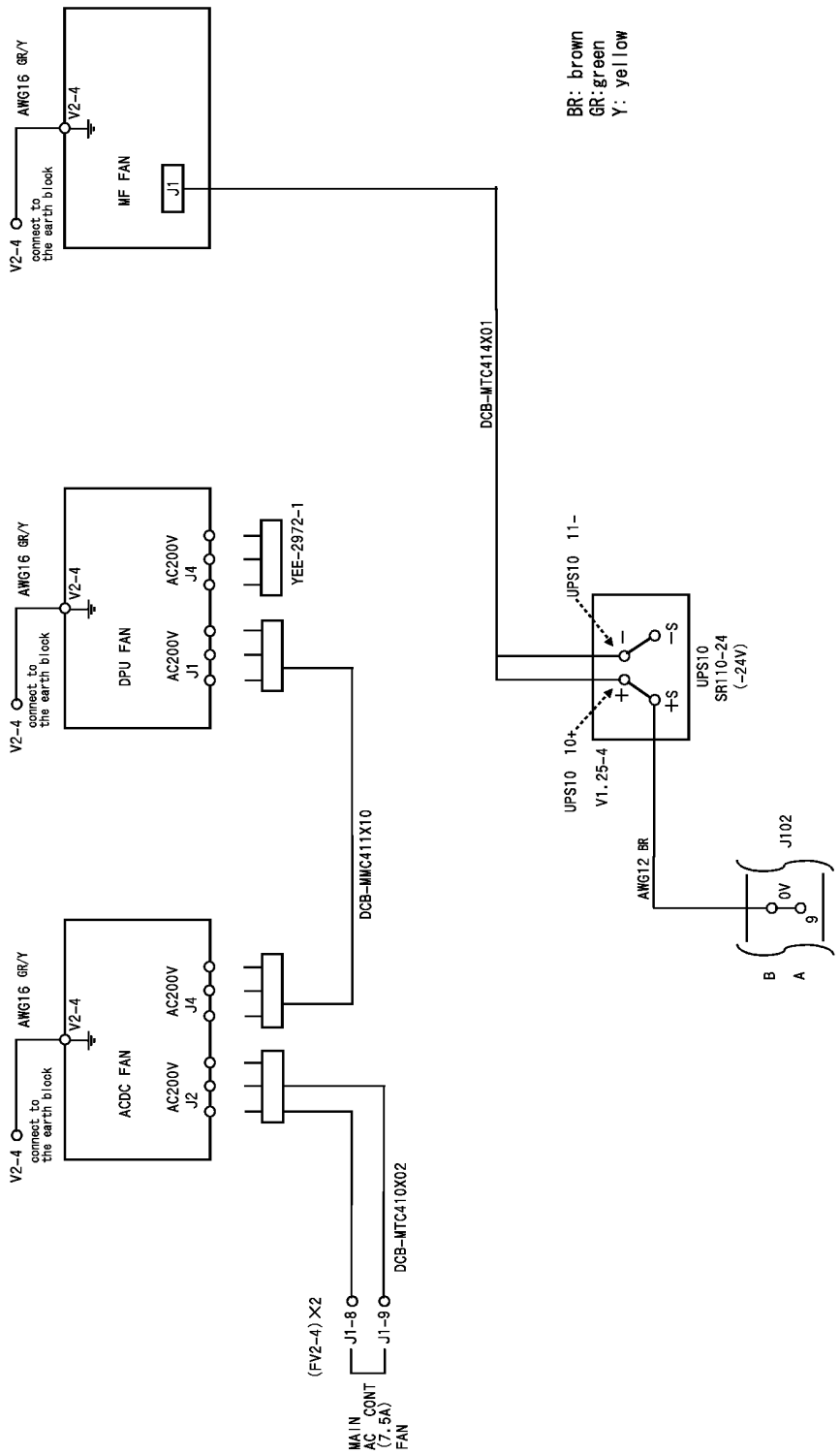

Figure 8-27 FAN AC/DC Wiring

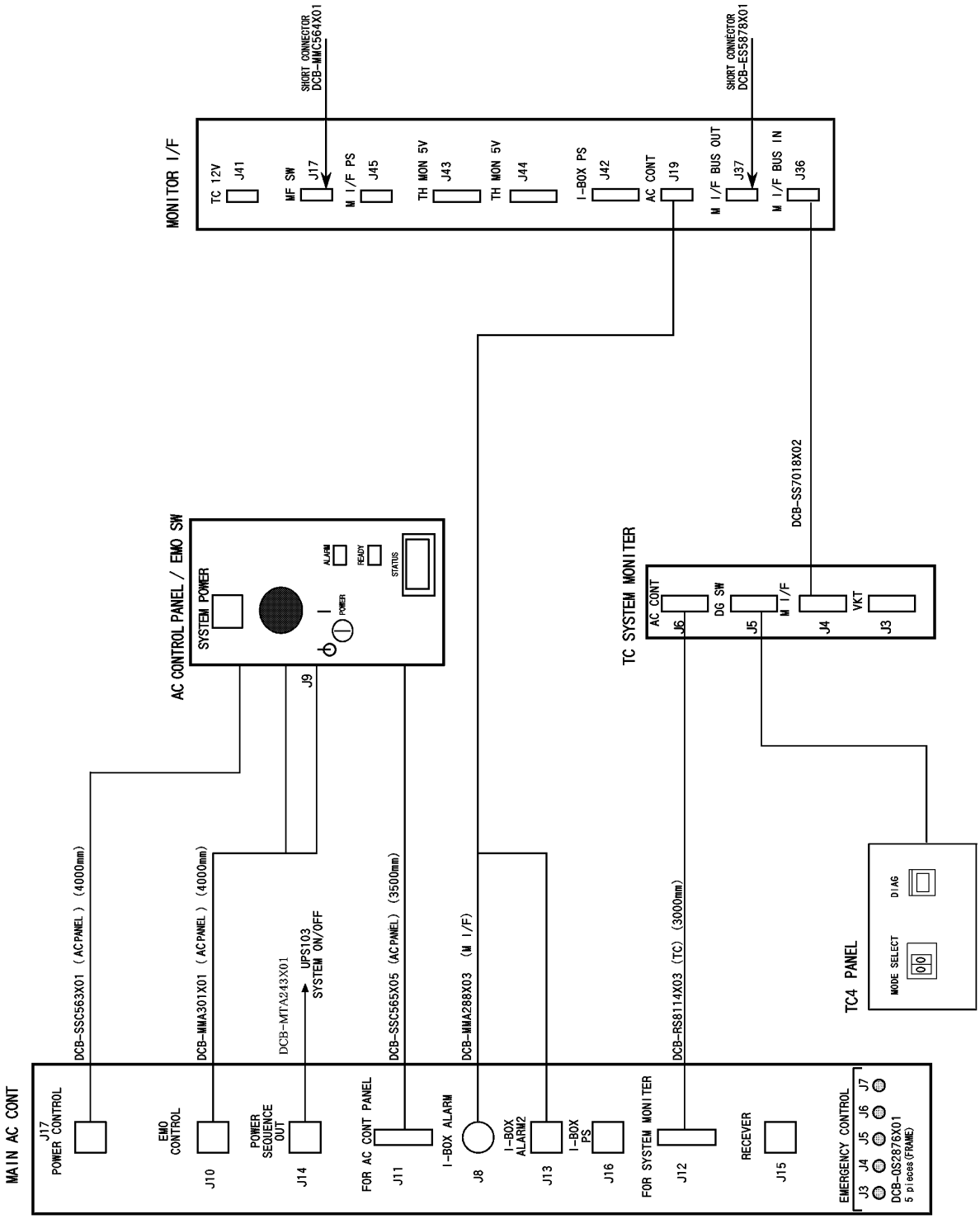

Figure 8-28 AC CONT Wiring (1)

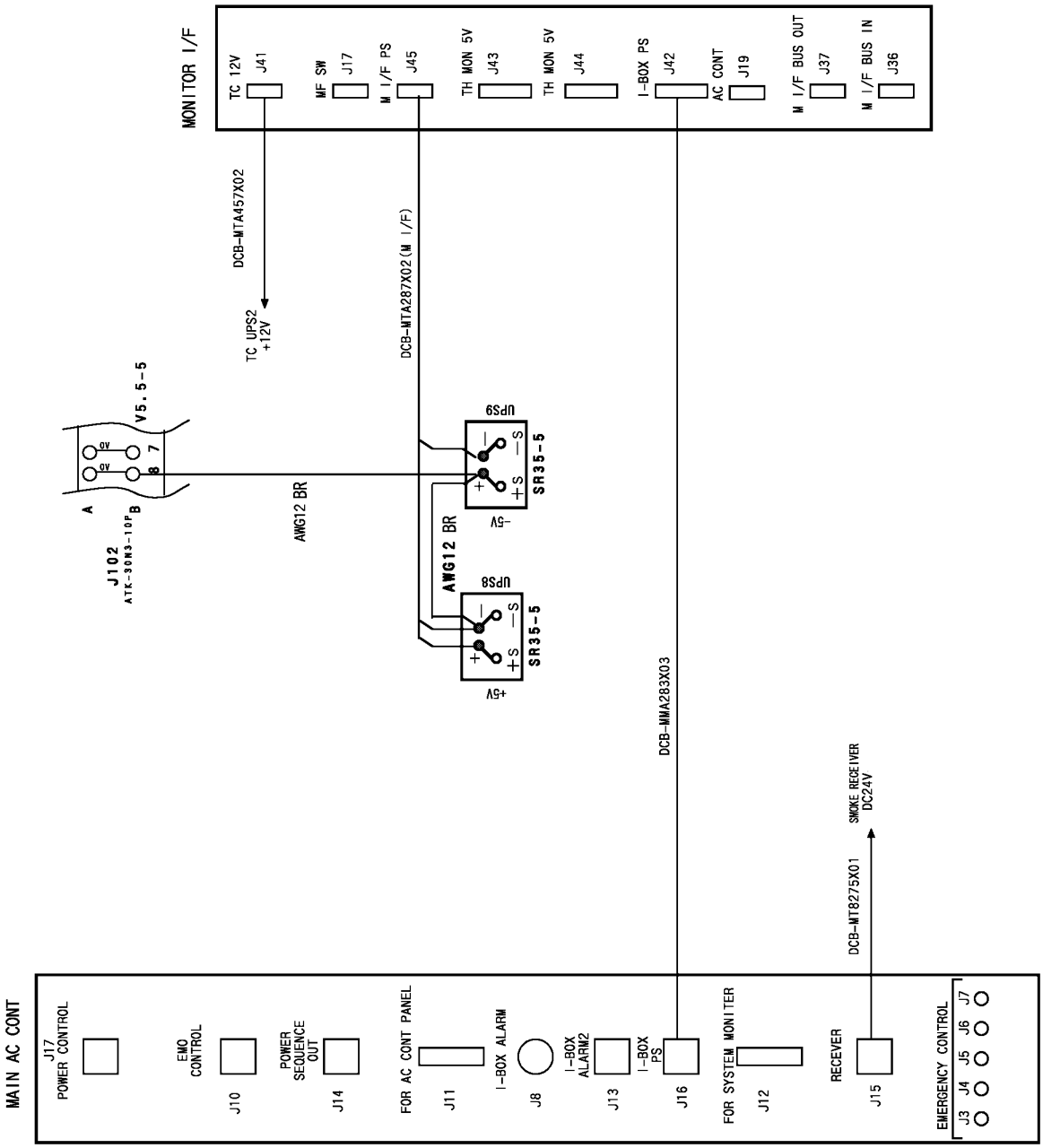

Figure 8-29 AC CONT Wiring (2)

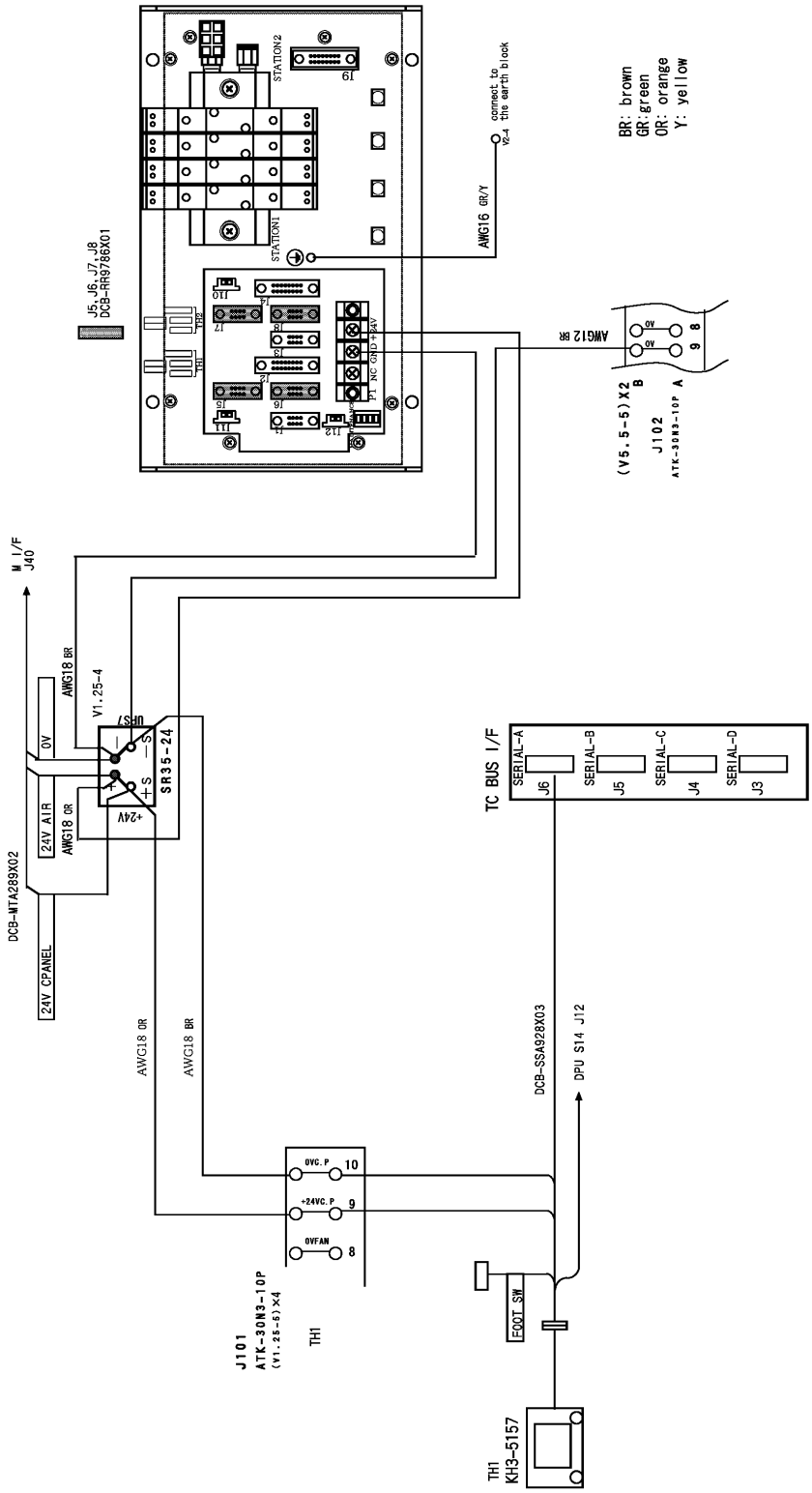

Figure 8-30 Control Box, Air Control Unit Wiring

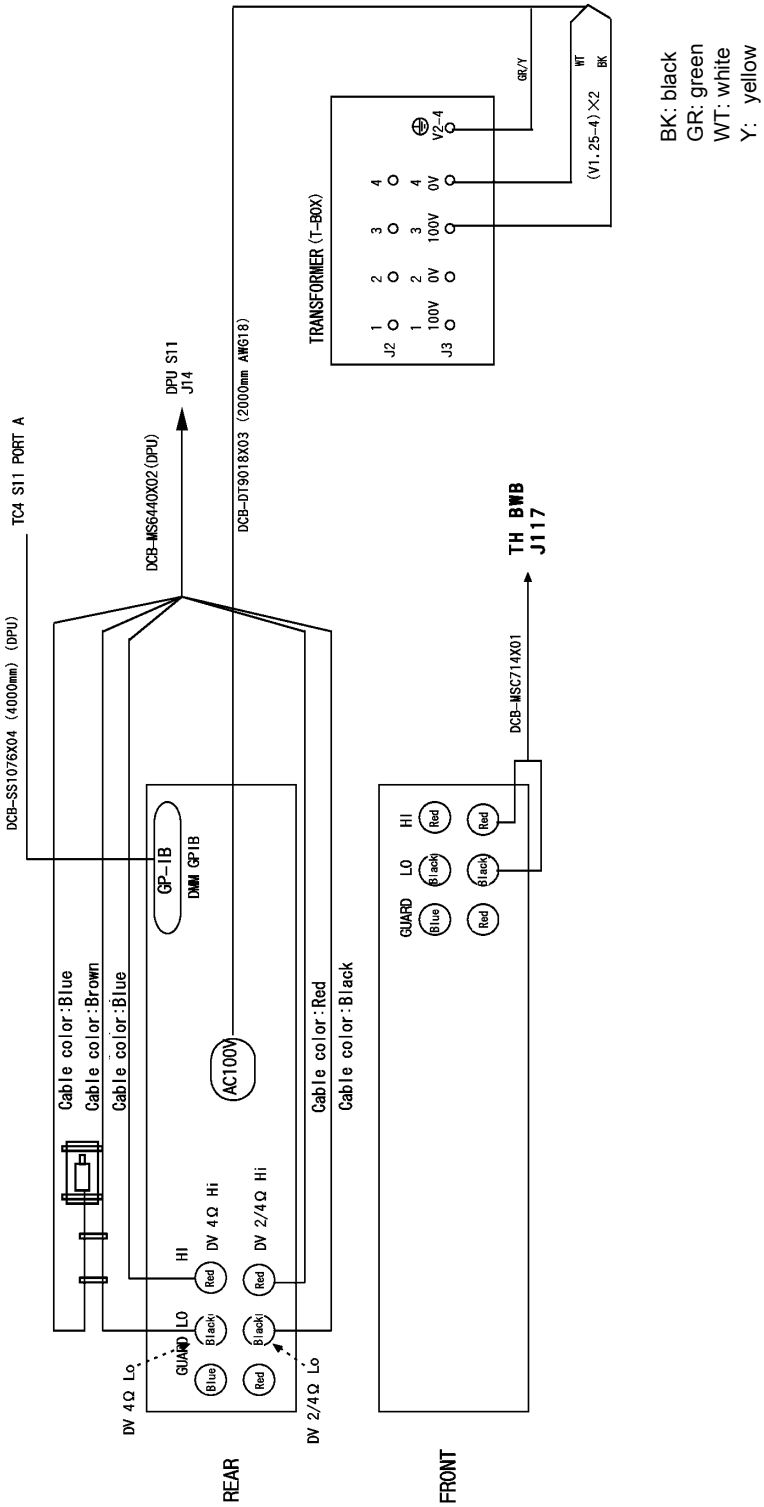

Note: Do not connect the blue connectors to the DCB-MS6440X03. Put a heat-shrinkable tube (Sumitube) on each of the blue plugs and then tie them to the brown cable coming from the DCB-MS6440X03.

Figure 8-31 DMM/FTU Temperature Sensor Connection

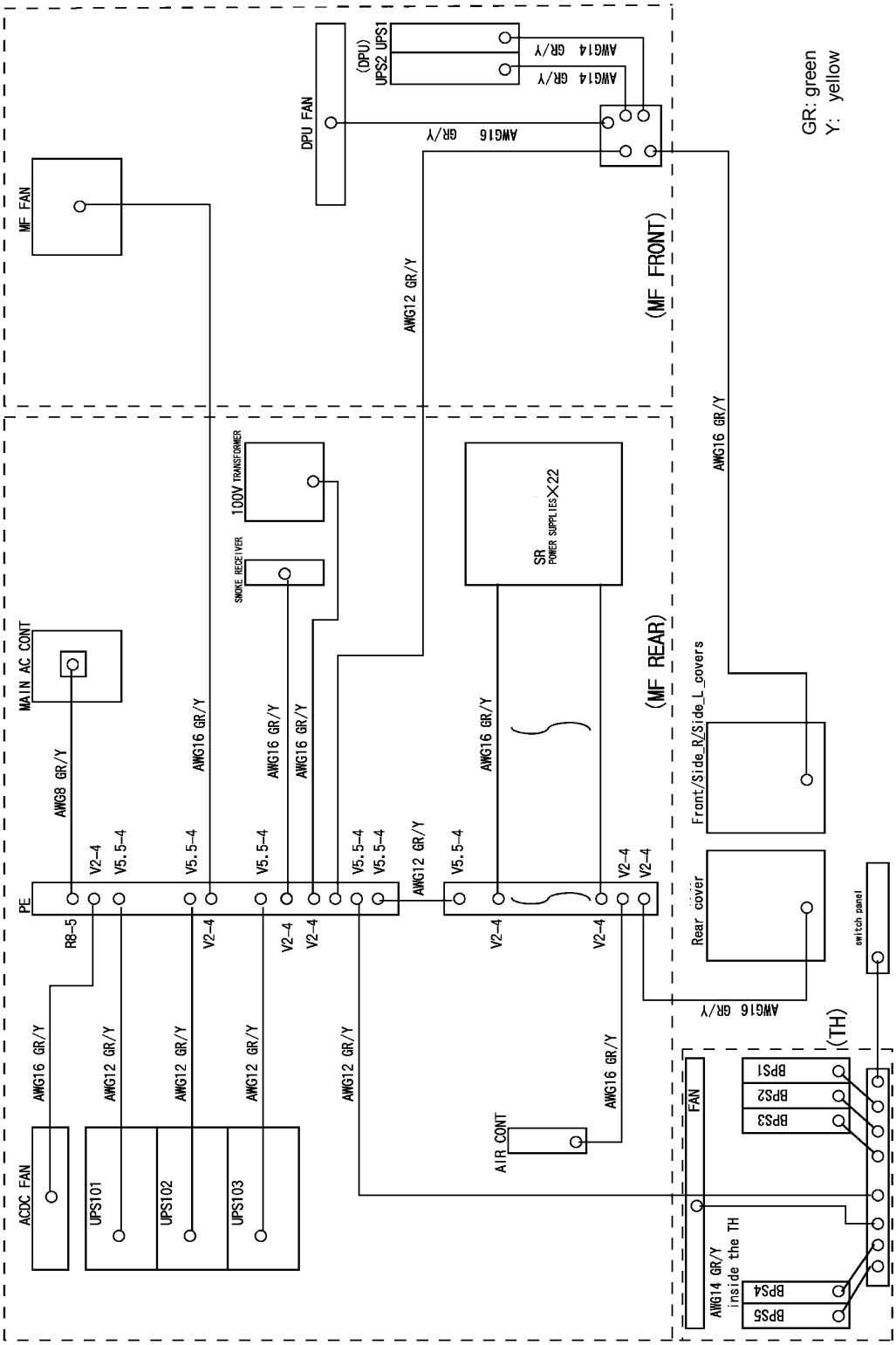

Figure 8-32 FG Connection

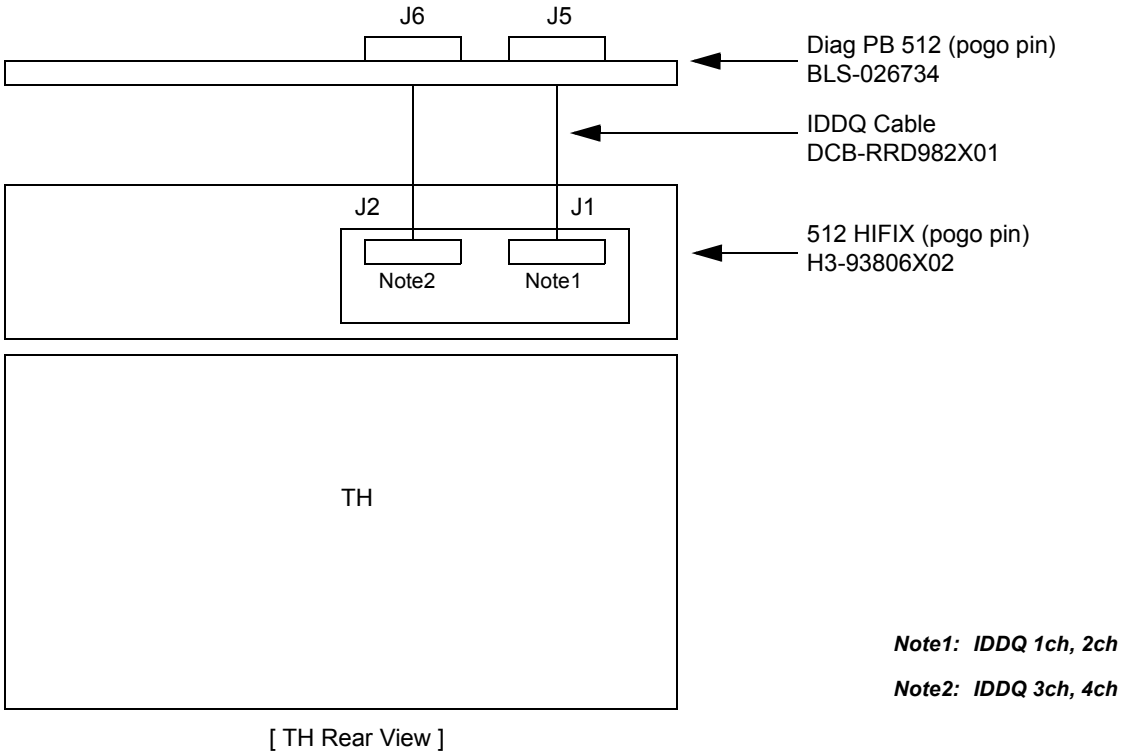

Figure 8-33 IDDQ Cable Connection

9. HANDLING OF HIFIX

This chapter describes the necessary precautions to take when handling the HIFIX in order to prevent the LIF connectors from being broken and to prevent incorrect contact.

WARNING

Always make sure the HIFIX is handled by two people.

(1) Installing the HIFIX

① Look at the LOCK/FREE switch on the test head to see that the FREE indicator is lit.

② Lift the HIFIX. Make sure this is done by two people.

③ Adjust the direction of the HIFIX. Do this by adjusting the positioning mark (▲).

④ Adjust the HIFIX to the installation position at the top of the test head, then make it horizontal. The hole in the test head cover serves as the guide when installing the HIFIX. The HIFIX can be positioned properly by adjusting its outer profile to the hole in the test head cover.

⑤ Place the HIFIX gently on the test head while holding it horizontally.

⑥ Press the LOCK switch to insert the LIF connector.

⑦ Check to see that the LOCK indicator is lit.

Precautions to be taken when installing the HIFIX

- Place the HIFIX gently.
- Place the HIFIX horizontally.
- Make sure the HIFIX has correct contact. A force may be applied to part of the connector, causing the connector to break.
- Reset the test head to its horizontal position before installing the HIFIX.
- Hold the handles and the levers together when lifting the HIFIX. The HIFIX may be locked incorrectly if the handles and levers are handled incorrectly.

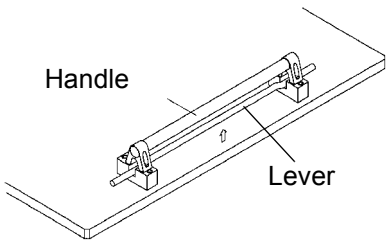

○ Correct installation position

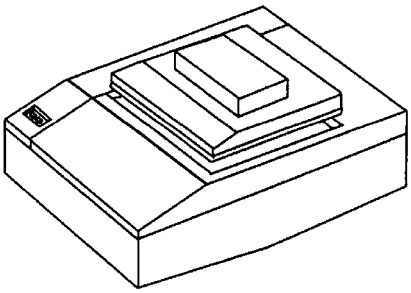

× Wrong installation position

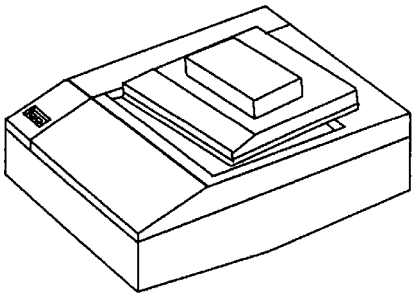

If placed at an incorrect position, the connector may break.

(2) Method for detaching the HIFIX

① Press the FREE switch to remove the LIF connector.

② Check the FREE indicator is lit.

③ Refer to Steps (3) thru (5) in Section 5.4 before lifting the HIFIX.

④ Lift the HIFIX gently, keeping it level. Tilting the HIFIX front-to back or left-to right while lifting it may damage the contactor. Use the guidelines below.

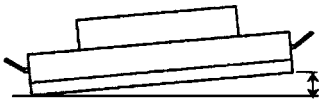

Left-to-right: 8 cm or less

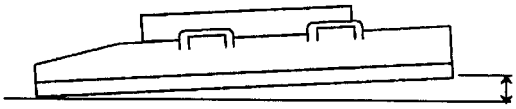

Front-to-back: 2 cm or less

(3) Precautions to be taken when storing the HIFIX

Dust and foreign matter may cause the HIFIX connector miss-contact.

① Prevent dust to the HIFIX connector for storage.

② When storing the HIFIX, place it on a flat surface so that the HIFIX connector is not damaged.

③ If foreign matter contaminates the connector, remove by using a brush or similar piece of equipment. If the foreign matter cannot be removed by using a brush or similar piece of equipment, apply isopropyl alcohol to the brush and clean only the contact plates. Do not use cotton swabs, cloth, paper or other fibrous material to clean the connector.

(4) Preventing dust on the test head

Dust collected on the pin card connectors also causes contact failure.

① Do not place articles (especially paper) on the test head to ensure that no foreign matter get into the connector. Inclusion of foreign matter also can cause the connector to break.

(5) Other caution

CAUTION

The HIFIX and Test Head that have been used to perform the timing calibration must always be used together. In addition, when you use the set of calibration data, the HIFIX and the Test Head that have been used to create the set data must be used.

For the T6500 series, there are two rotary switches which are used to set a HIFIX serial number. The calibration file name consists of an identification code that includes the HIFIX serial number.

For more information on the calibration file name, refer to "T6500 Series Calibration Reference Manual."

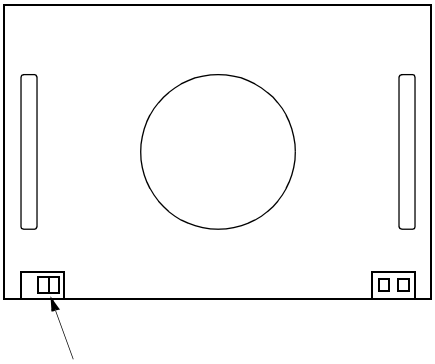

10. SPARE PARTS KIT

Spare Parts Kit A1

Name	Type Description	Quantity
SQPG	BIR-026229	1
TERM	BGS-026357	1
CONTACT	BGS-026241	1

Spare Parts Kit A2

Name	Type Description	Quantity
STICK(T6573)	BGR-025826	1

Spare Parts Kit A3

Name	Type Description	Quantity
STICK(T6563)	BGR-025826X02	1

Spare Parts Kit A4

Name	Type Description	Quantity
STICK(T6533)	BGR-025826X03	1

Spare Parts Kit A5

Name	Type Description	Quantity
PC16MW	BMS-025853	1

Spare Parts Kit A6

Name	Type Description	Quantity
PC64MW	BMS-025853X02	1

Spare Parts Kit A7

Name	Type Description	Quantity
OPTION PG(SCPG4GW)	BIR-026230	1

Spare Parts Kit A8

Name	Type Description	Quantity
OPTION PG(SCPG16GW)	BIR-026230X02	1

Spare Parts Kit A9

Name	Type Description	Quantity
OPTION PG(ALPG&SCPG4GW)	BIR-026230X03	1

Spare Parts Kit A10

Name	Type Description	Quantity
OPTION PG(ALPG&SCPG16GW)	BIR-026230X04	1

Spare Parts Kit A11

Name	Type Description	Quantity
OPTION PG(DUMMY)	BIR-026350	1

Spare Parts Kit A12

Name	Type Description	Quantity
DCAP(16MW)	BIR-026338	1

Spare Parts Kit A13

Name	Type Description	Quantity
DCAP(64MW)	BIR-026338X02	1

Spare Parts Kit A14

Name	Type Description	Quantity
ADC/DAC BOARD	BIS-026339	1

Spare Parts Kit A15

Name	Type Description	Quantity
ADC/DAC BOARD	BIS-026339X02	1

Spare Parts Kit A16

Name	Type Description	Quantity
DCAP_AFM(16MW)	BIS-029368	1

Spare Parts Kit A17

Name	Type Description	Quantity
OPTION PG(ALPG&AFM&SCPG4GW)	BIR-027902	1

Spare Parts Kit A18

Name	Type Description	Quantity
OPTION PG(ALPG&AFM&SCPG16GW)	BIR-027902X02	1

Spare Parts Kit A19

Name	Type Description	Quantity
HSCLK OPTION	BIS-029624	1

Spare Parts Kit B1

Name	Type Description	Quantity
DPU_IF	BGR-026245	1
UDC CONT	BGR-023712	1
UDC	BGR-023713X02	1
DPS CONT	BGR-024897	1
DPS	BGR-023715X02	1
MDC	BGR-023711X02	1

Spare Parts Kit B2

Name	Type Description	Quantity
BUS IF	BGR-026240	1

Spare Parts Kit C1

Name	Type Description	Quantity
MONITOR IF	BGR-024885X03	1

Spare Parts Kit C2

Name	Type Description	Quantity
SYS MONI	BGK-025647	1
BUS IF	BGK-025648	1
TBUS IF	BGK-025646	1

Spare Parts Kit D1

Name	Type Description	Quantity
DPU BPS1	WUN-11V2B15V2B18V	1

Spare Parts Kit D2

Name	Type Description	Quantity
DPU BPS2	WUN-11V2B5V2B3V	1

Spare Parts Kit D3

Name	Type Description	Quantity
TH BPS1	WUN-9V2R5V3V2R5V5VA	1

Spare Parts Kit D4

Name	Type Description	Quantity
TH BPS2	WUN-5V2R5V5V2R5V3VA	1

Spare Parts Kit D5

Name	Type Description	Quantity
TH BPS3	WUN-9V5V2B2R5V2BA	1

Spare Parts Kit D6

Name	Type Description	Quantity
TH BPS4	WUN-9V2R5V2BDM5VA	1

11. MAINTENANCE PARTS

Item Name	Advantest Standard
Air filter for the main rack	KH9-91525
Air filter for test head	MPX-M0012A
Fan block for mainframe	KH3-93811
Fan block for DPU unit	KH3-93812
Fan block for ACDC power supply	KH3-93813
AC fan block for test head	KH3-93818
Board handle mounted inside main unit frame	KH9-90287
Board handle mounted inside test head (LEFT)	MAE-J2209A
Board handle mounted inside test head (RIGHT)	MAE-J2207A
Jig used to install or remove Test Head board power supply	MBZ-L7823A
Accessories(TC4)	KH3-93594
Accessories(TC7)	KH3-910277

12. REPLACING PARTS

12.1 Test Head Air Coupler Replacement Procedure

(1) Turn off the system power. Turn off the main air supply for the system.

(2) Remove the HIFIX air connector A as shown in Figure 12-1.

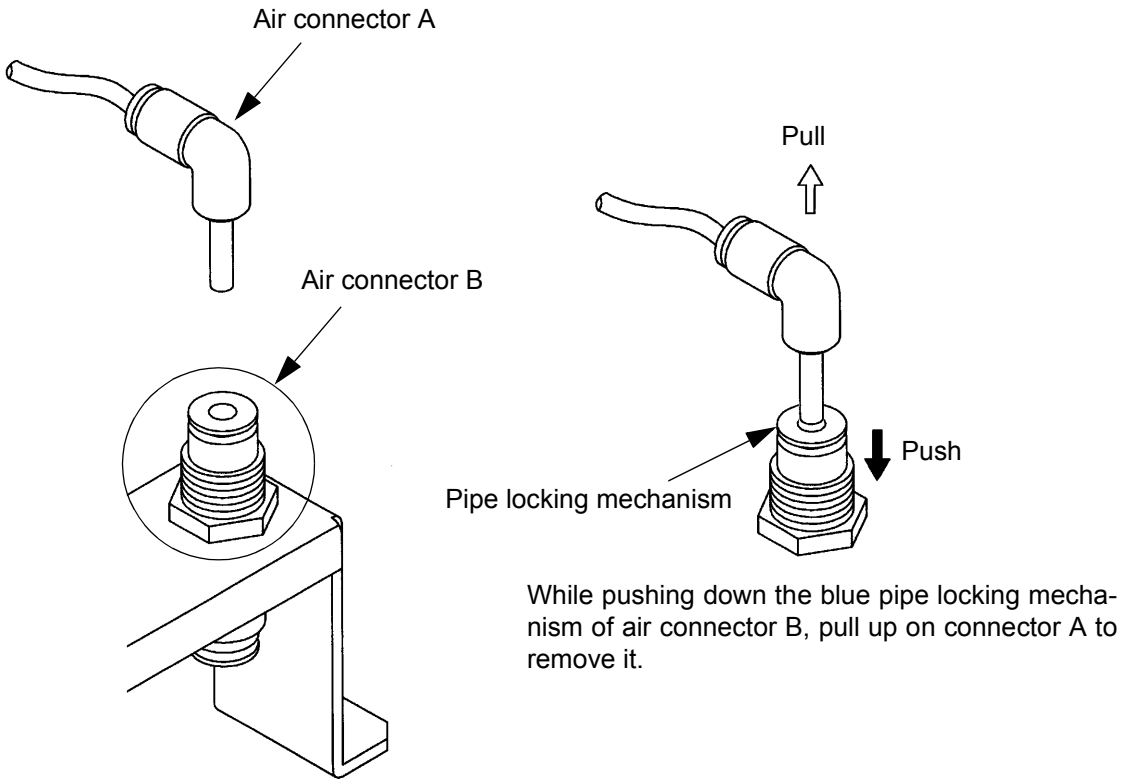

Figure 12-1 Air Connector A Removal

Note: ***Forcibly removing the connector without releasing the locking mechanism will result in damage to the connector.***

(3) Using a wrench, remove the nuts which secure the B air connectors. (Figure 12-2) Remove the screws (two of them) which secure the coupler base. Remove the coupler base from the test head.

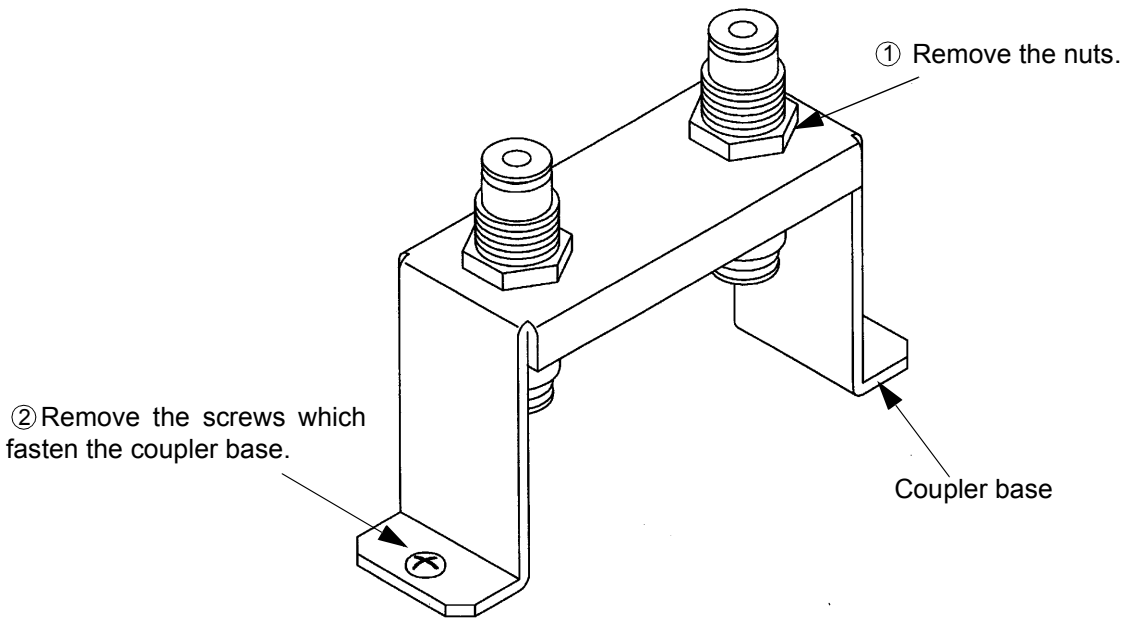

Figure 12-2 Air Connector B and Coupler Base Removal

(4) As shown in Figure 12-3, remove the couplers. One is attached to the transparent pipe and the other is attached to the black pipe.

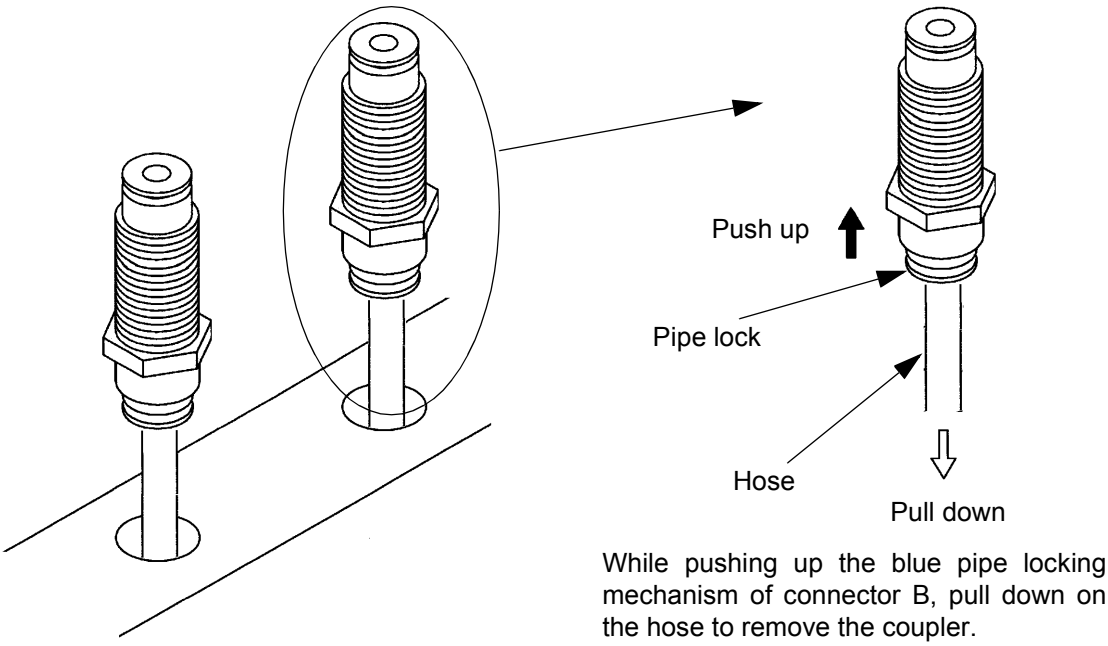

Figure 12-3 Coupler Removal

(5) Attach the replacement coupler to the hose.
(Firmly push the hose into the coupler until it is locked.)

(6) Perform procedure (3) in the reverse order to secure the coupler to the coupler base.

13. EXTERNAL TC7 MAIN FRAME

13.1 Unit Layout (All Units)

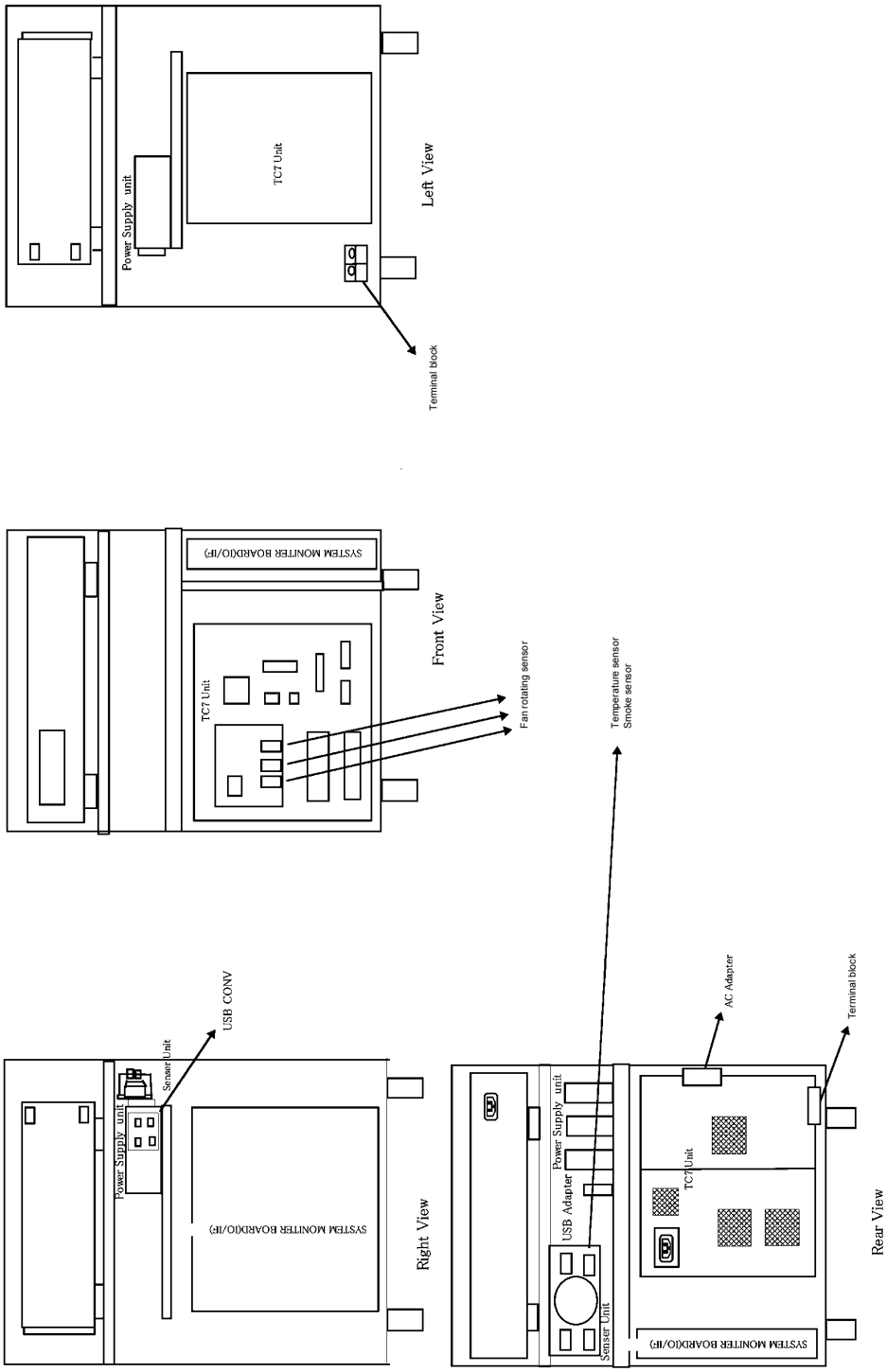

Figure 13-1 Unit Layout (All Units)

13.2 Unit Layout (Power Supplies)

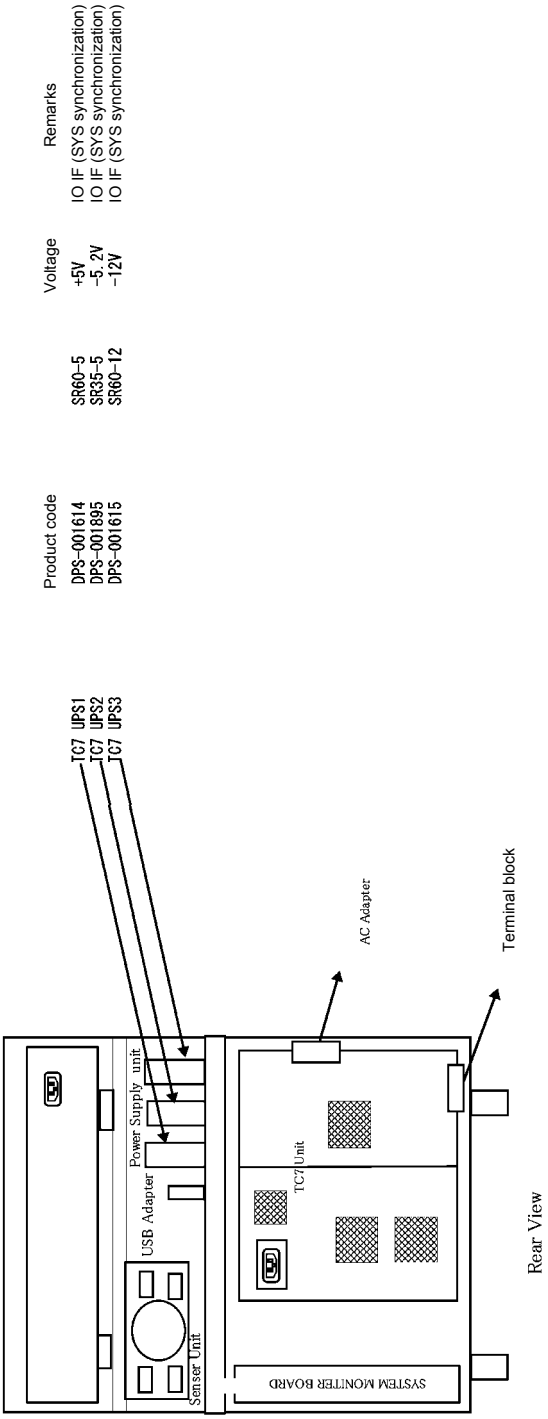

Figure 13-2 Unit Layout (Power Supplies)

13.3 Unit Center of Gravity

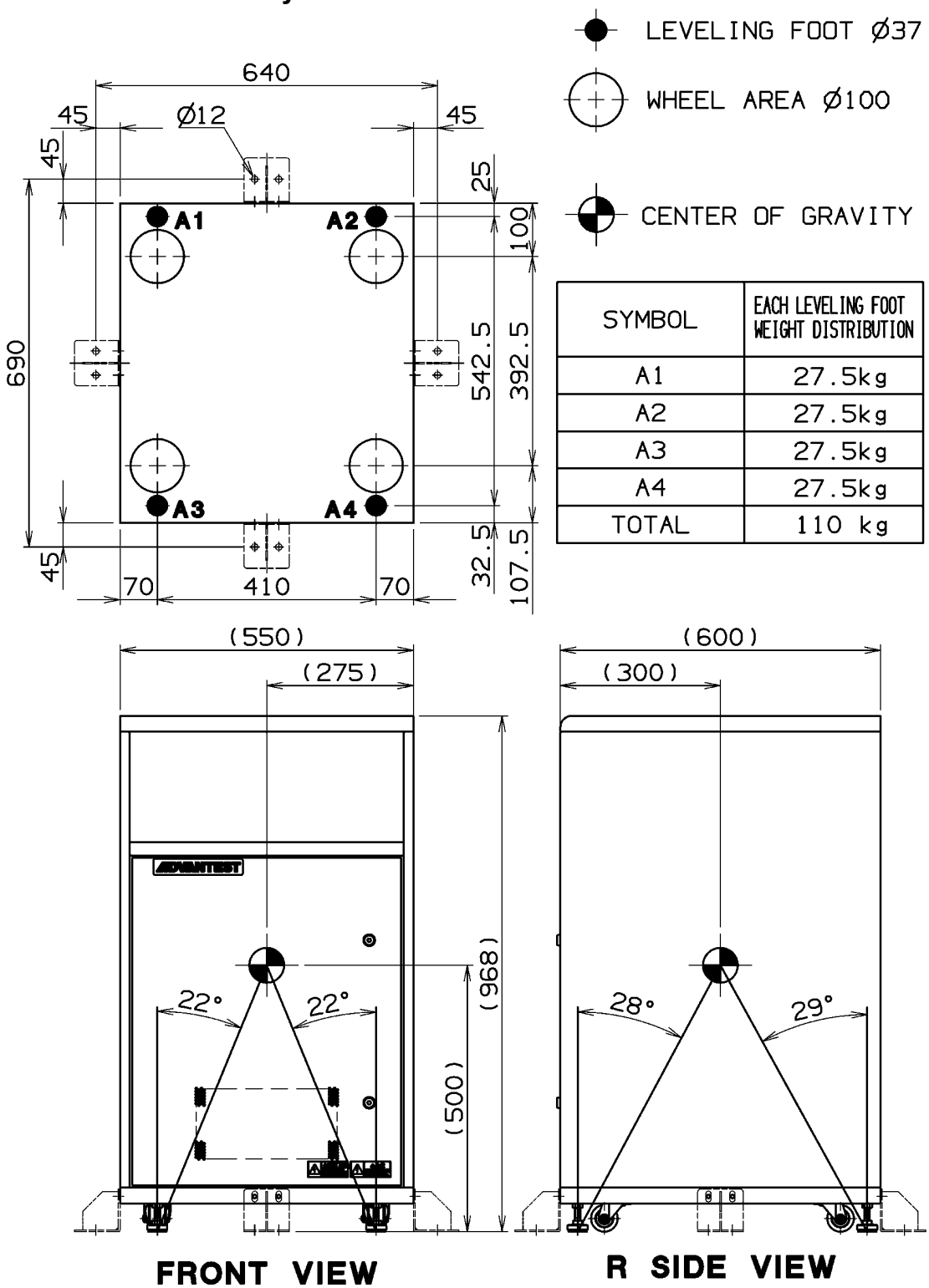

SYMBOL	EACH LEVELING FOOT WEIGHT DISTRIBUTION
A1	27.5kg
A2	27.5kg
A3	27.5kg
A4	27.5kg
TOTAL	110 kg

Figure 13-3 Unit Center of Gravity

13.4 Unit Power Supply Specification Table

Table 13-1 External TC7 Main Frame Power Supply Specification

UPS	Product code	Power supply name	Voltage	Remarks
TC7 UPS1	DPS-001614	SR60-5	+5 V	IO IF (SYS synchronization)
TC7 UPS2	DPS-001895	SR35-5	-5.2 V	IO IF (SYS synchronization)
TC7 UPS3	DPS-001615	SR60-	-12 V	IO IF (SYS synchronization)

Table 13-2 Voltage Adjustment when the External TC7 is Set

Power supply location	Power supply to be adjusted	Position to be adjusted	Voltage
MF	UPS6	Between UPS6 terminals 2+ and 3-	+5.15 V, +0.05V/ -0V
External TC7 main frame	UPS1	Between UPS1 terminals 2+ and 3-	+5.00 V, ±0.05 V
External TC7 main frame	UPS2	Between UPS2 terminals 2+ and 3-	-5.20 V, ±0.05 V
External TC7 main frame	UPS3	Between UPS3 terminals 2+ and 3-	-12.00 V, ±0.05 V

13.5 List of the Boards Required when the External TC7 is Set

Table 13-3 Board Mounted in the TC Unit

Slot number	Board number	Circuit name	Remarks
	BGC-027896	EWSIF	

Table 13-4 IO IF Board Mounted in the External TC7

Slot number	Board number	Circuit name	Remarks
IO/IF	BGR-027897	IO IF	
	BGR-027898	IO OPTION IF	OPTION

Table 13-5 Upgraded MF Board

Slot number	Previous model	Upgrade	Circuit name
MF 1	BGR-024885x03	BGR-024885x12	Monitor I/F
TH16	BMR-026338	BMR-026338 (the ALF version or later)	DCAP
TH16	BIS-029368	BIS-029368 (the BED version or later)	DCAP AFM

13.6 External TC7 Wiring Layout

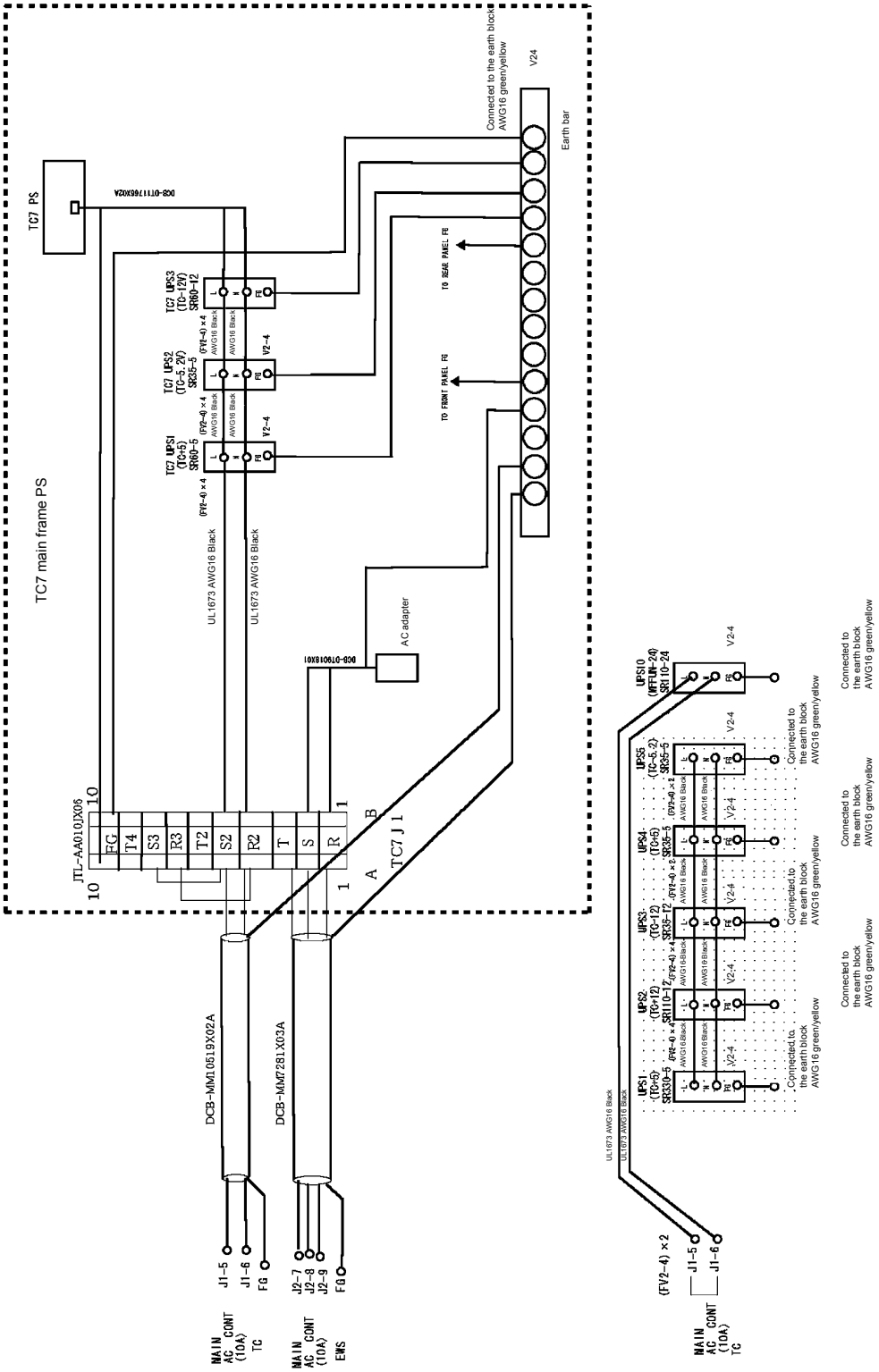

Figure 13-4 200 V AC cable and Earth Connection Diagram

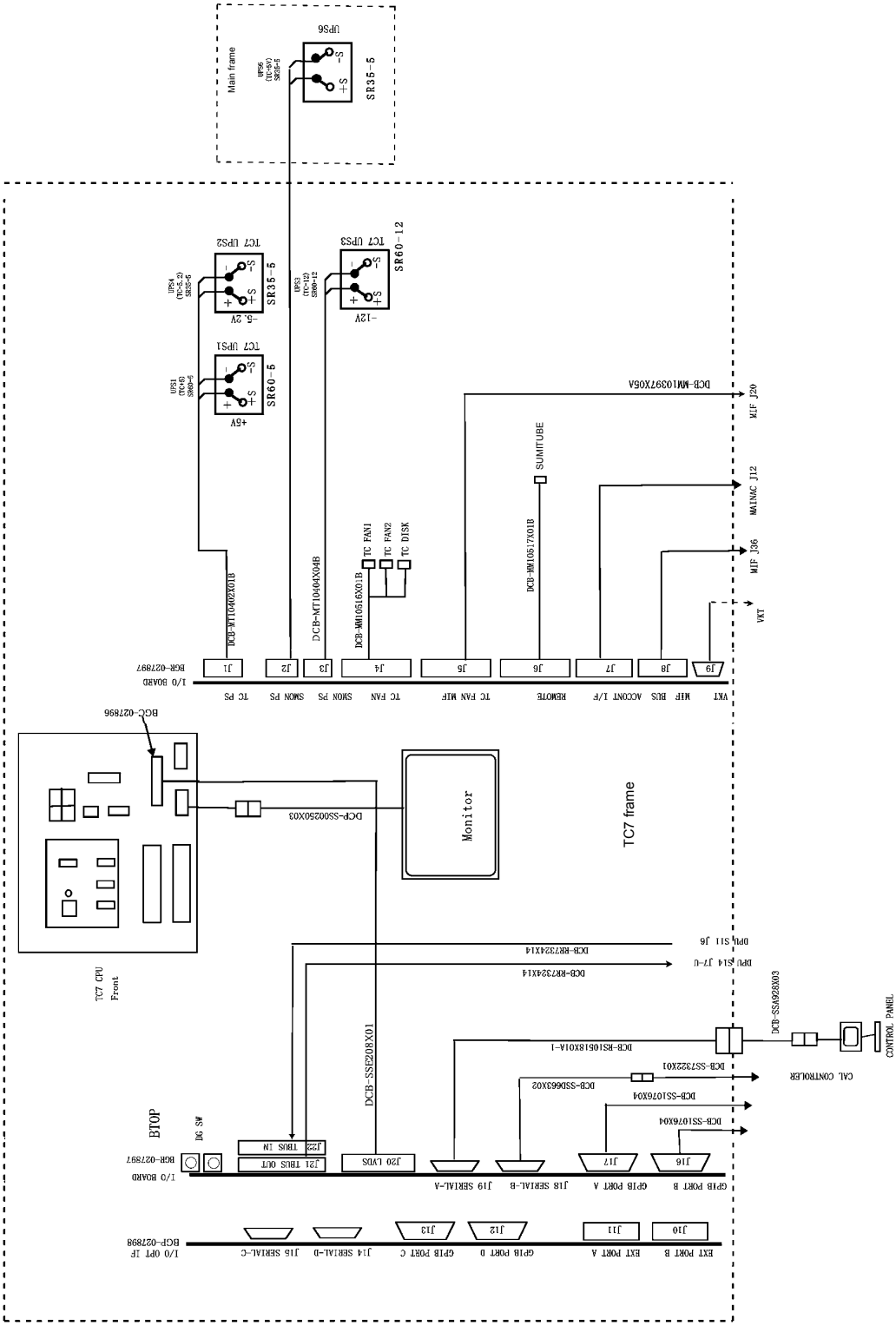

Figure 13-5 IO IF Board and DC Connection Diagram

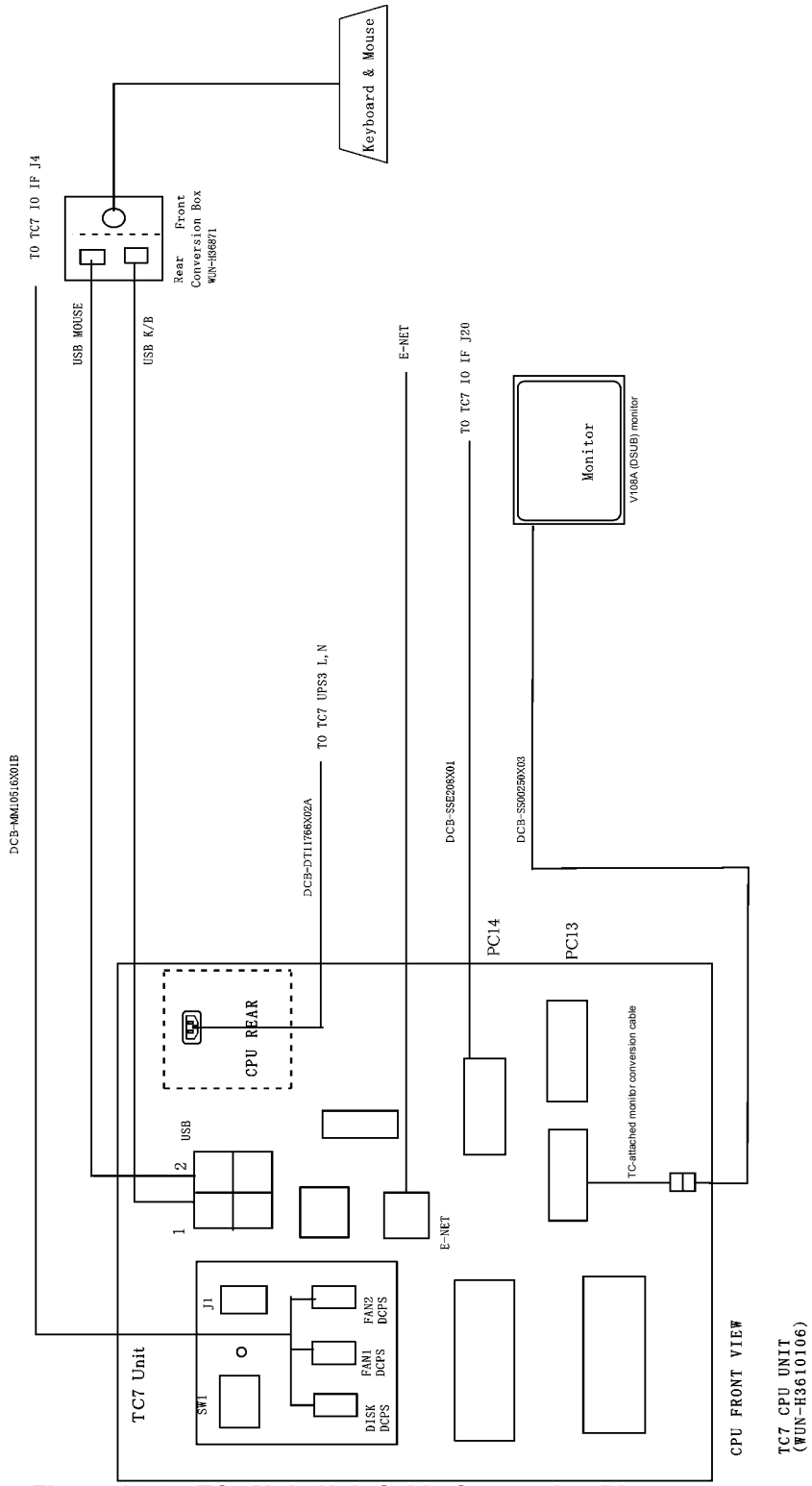

Figure 13-6 TC7 Main Unit Cable Connection Diagram

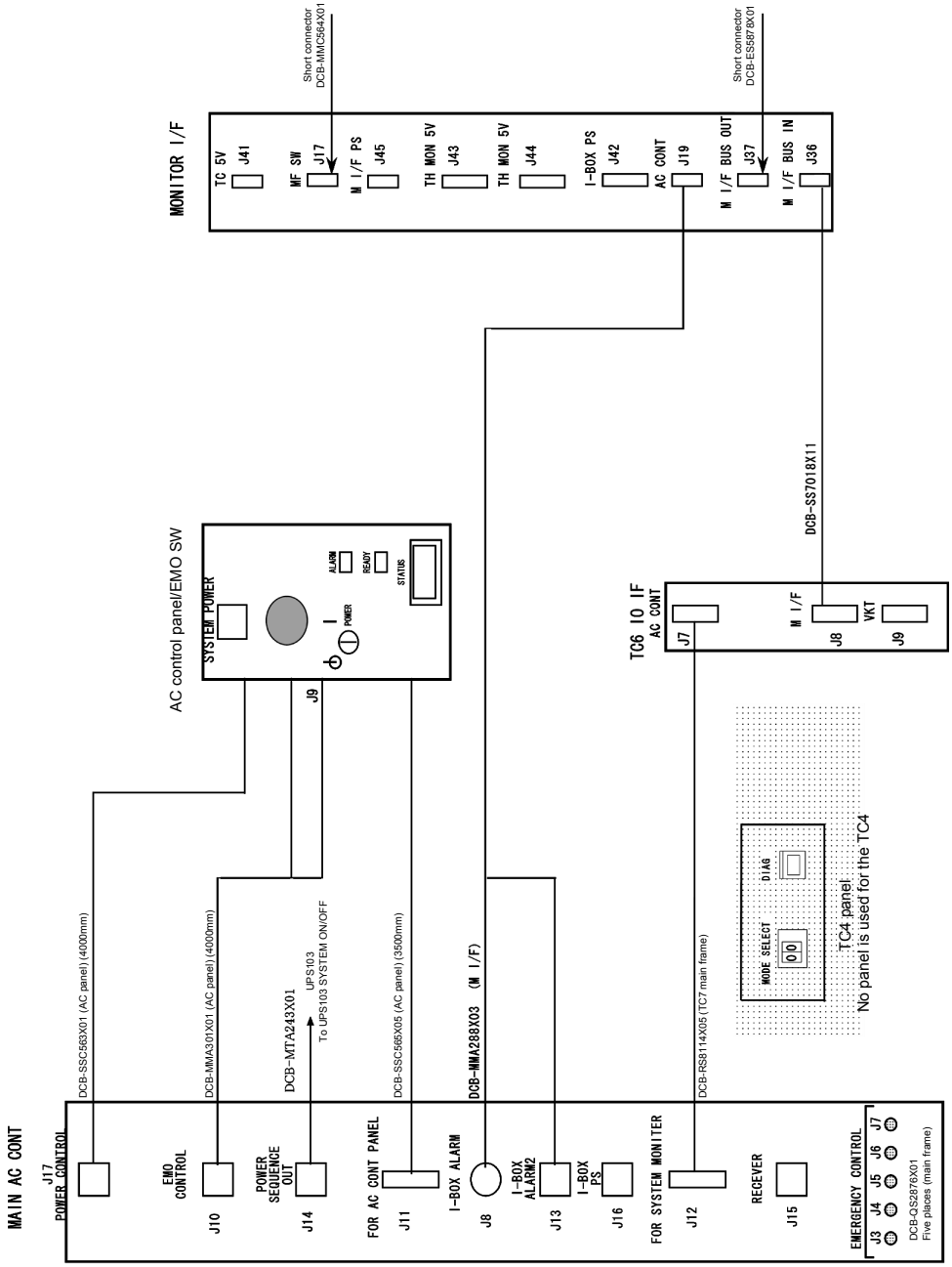

Figure 13-7 AC CONT Connection Diagram 1

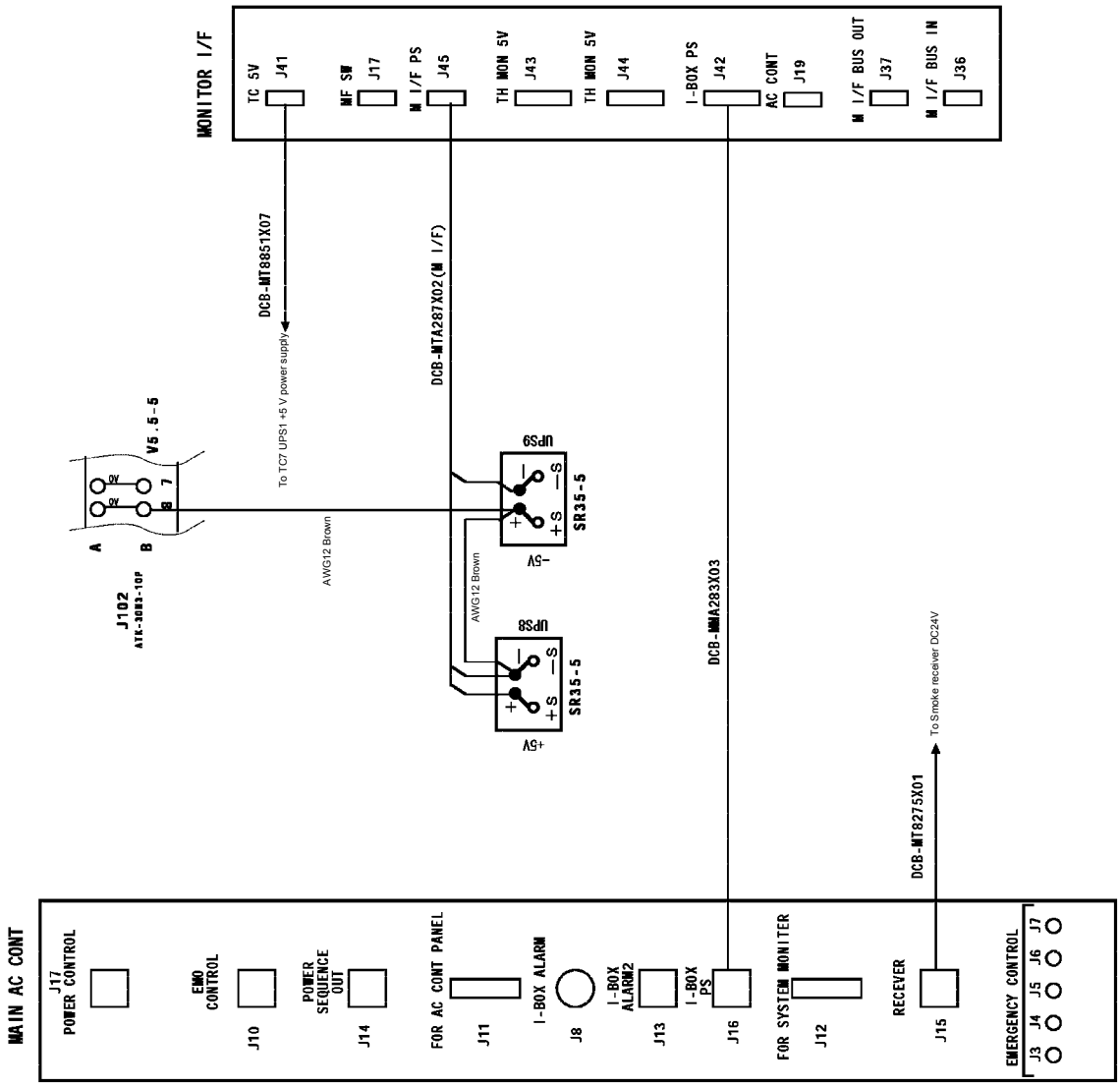

Figure 13-8 AC CONT Connection Diagram 2

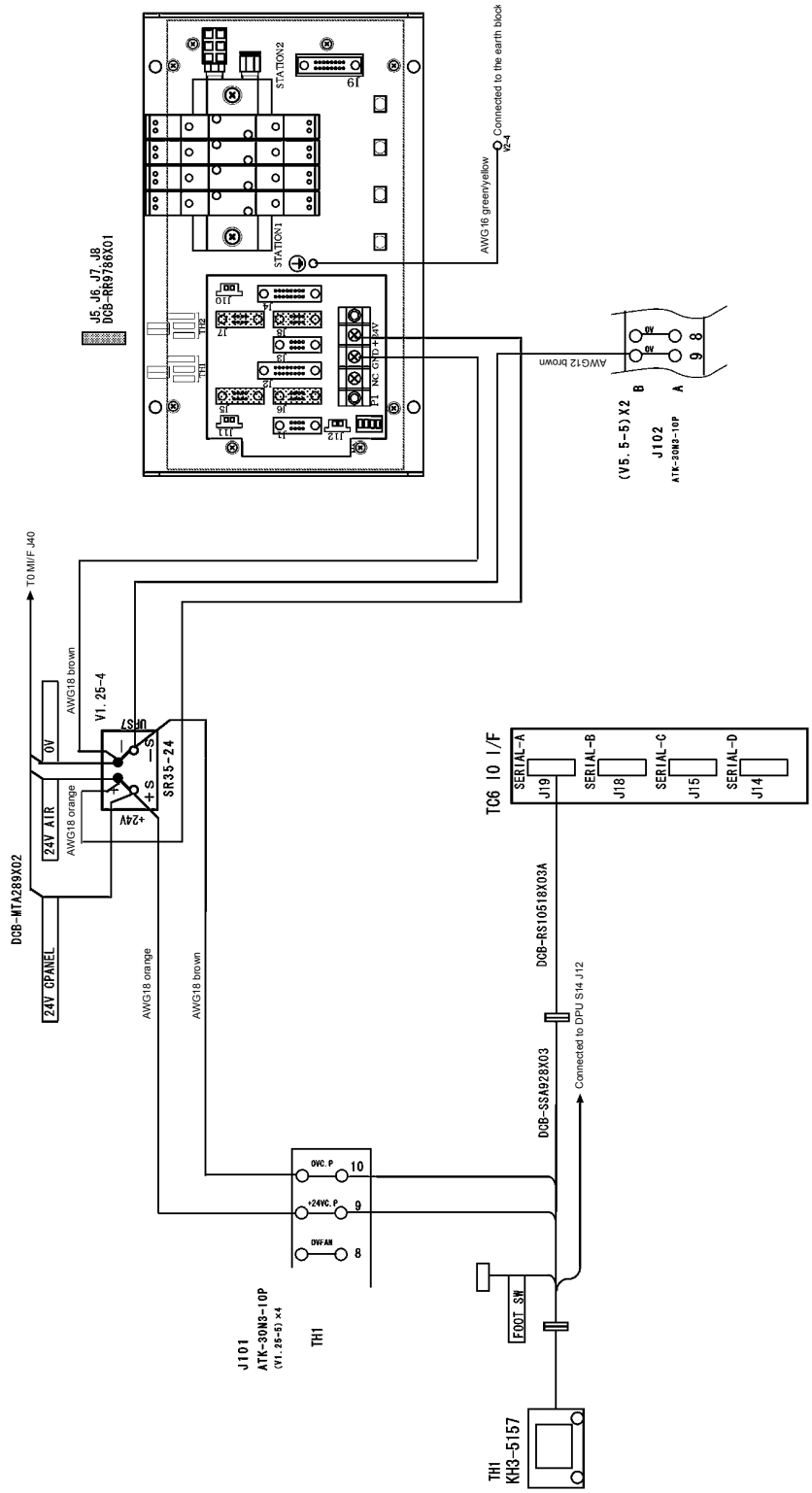

Figure 13-9 Control Panel and Air Control Unit Connection Diagram

Board name	TC6 IO I/F		BUS IF	SQPG	STICK	BUS IF	DPU IFL		TC6 IO I/F
Product code	BGR-027897		BGR-026240	B1R-026229	B1S-025826 (T6573) B1S-025826X02 (T6563) B1S-025826X03 (T6533)	BGR-026240	BGR-024899		BGR-027897
Slot number	1		14	5	4	14	11		1
Unit name	TC7		DPU	TH	TH	DPU	DPU		TC7
Wiring order	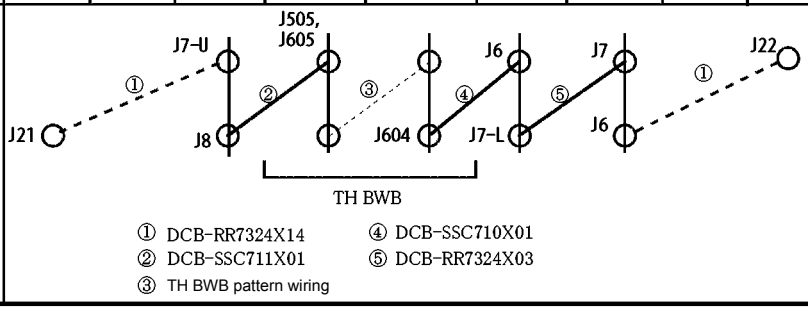								

Figure 13-10 Tester Bus Connection Diagram

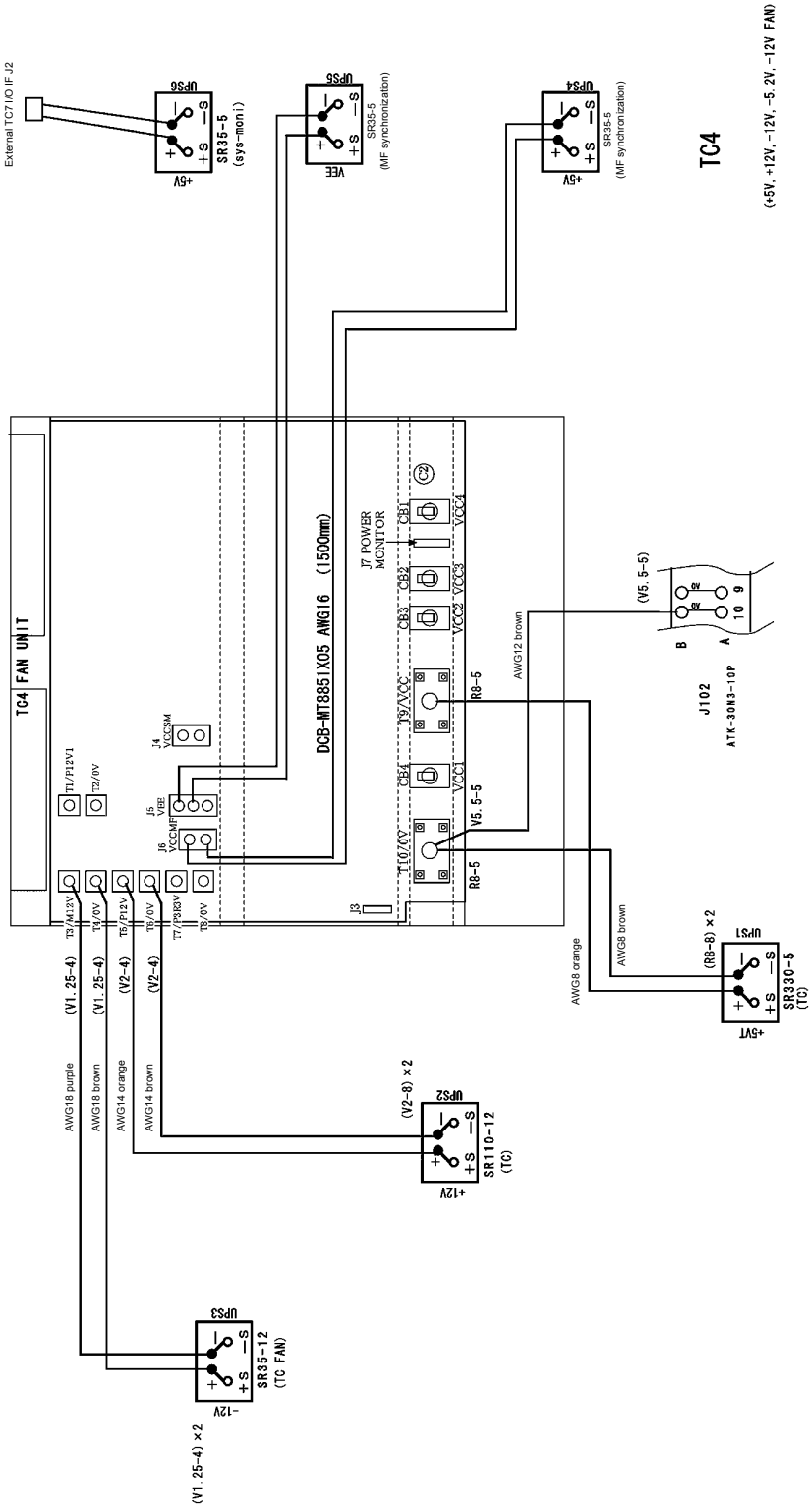

Figure 13-11 DC Connection Diagram

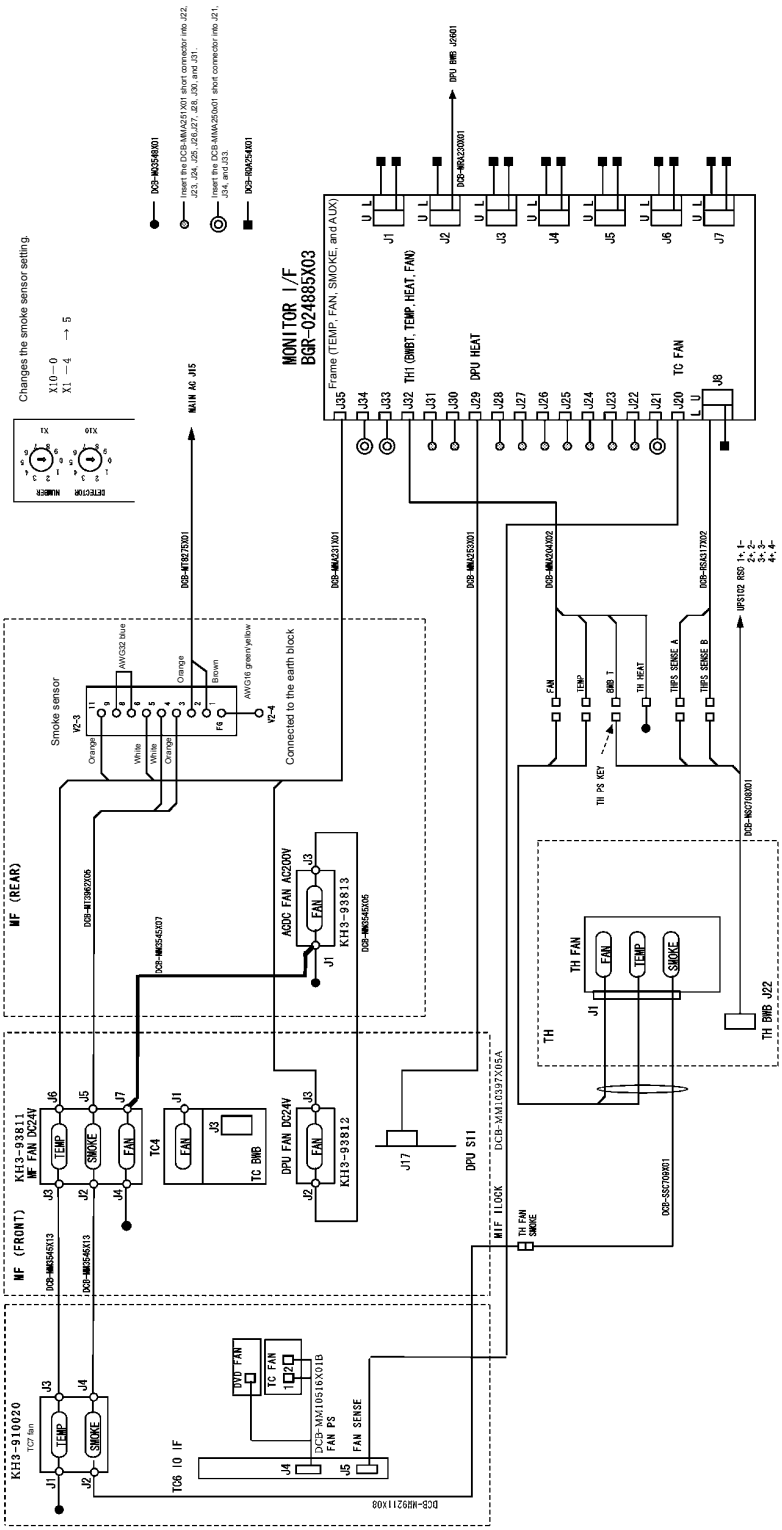

Figure 13-12 HL1 TC7 Sensor Cable Connection Diagram (Smoke, Fan, and Temperature sensors)

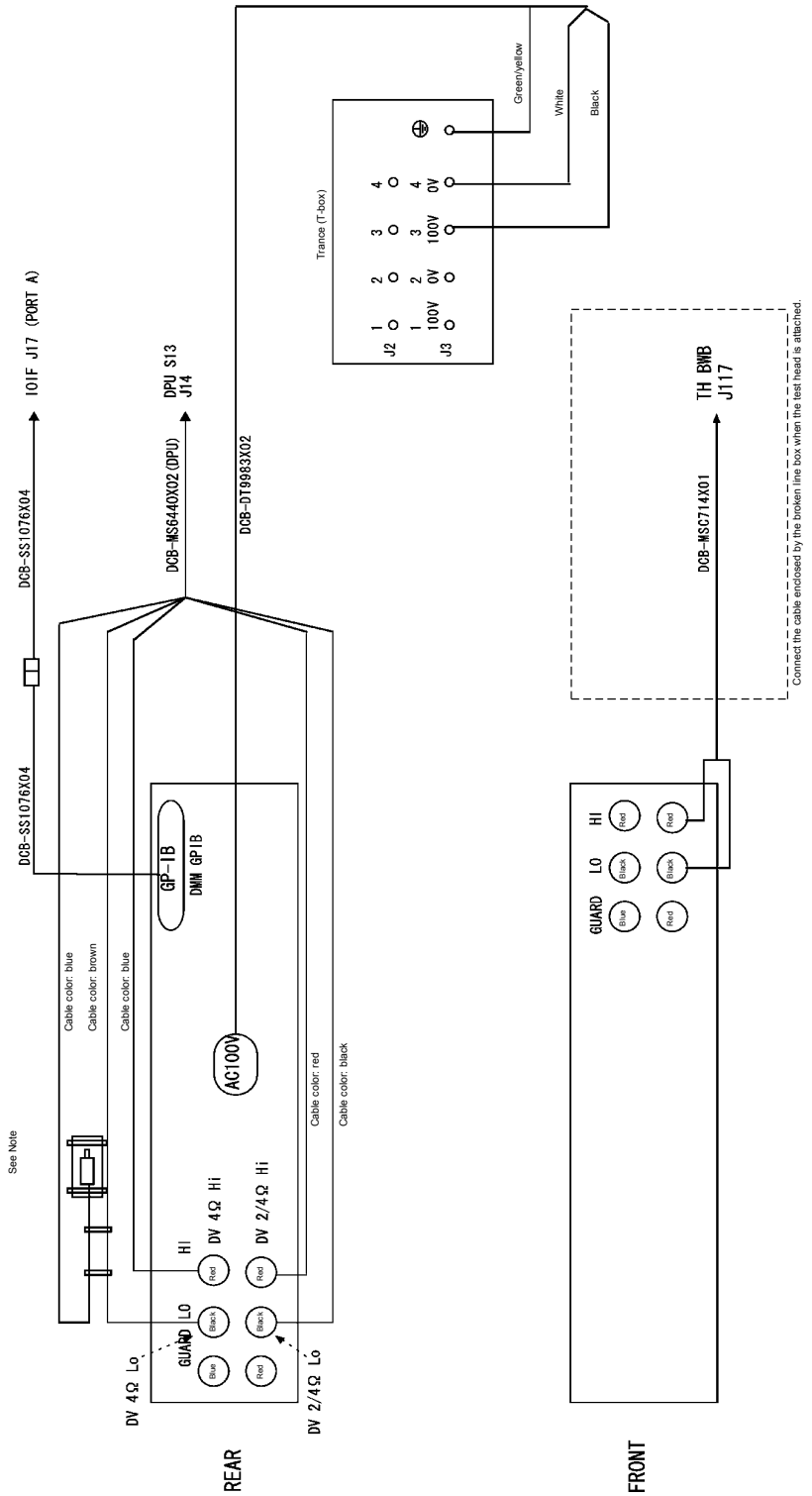

Figure 13-13 DMM Connection Diagram

APPENDIX 1. MAINTENANCE OF AIR COMPRESSOR PANEL UNIT

Board standard name: BLG-024720

A1.1 Air Pressure Setting

(1) Connect the air source to the hi-coupler (YEE-001065) and introduce air at a pressure of approximately 49×10^4 Pa.

(2) Adjust the regulator meter to approximately 49×10^4 Pa using the valve.

A1.2 Air Compressor Panel Cable Connection

(1) During maintenance

Connect the short contact connector (DCB-RR9786X01) into J5 (TH1) and J6 (TH1). Leave J7 (TH2) and J8 (TH2) always fitted with the short connector (DCB-RR9786X01).

Remark: The BLG-024720 has a maintenance switch independently for each station. The first maintenance switch is TH1.

WARNING

If there is no short contact connector to connect to J5 and J6, turn switch 1 of maintenance switch (S1) on. This places the unit in maintenance mode. Since the air compressor panel board has its safety circuit disabled, be sure to turn the maintenance switch (S1) off after you finished maintenance work.

(2) Connecting peripheral equipment with cable

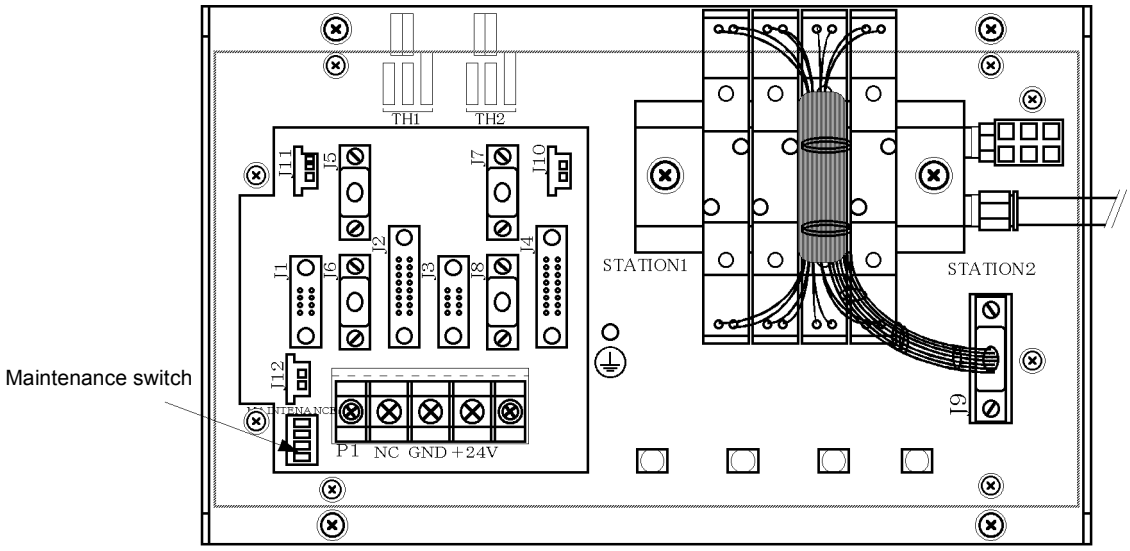

Figure A1-1 Assembly of BLG-024720 Air C Compressor Panel (Front View)

The short contact connectors (DCB-RR9786X01) are connected to J5, J6, J7 and J8 as standard. Connect the prober control cable to the appropriate terminals depending on the types of the prober and HIFIX as shown in Table A1-1.

When connecting cables to a shaftlock-method prober, refer to “REMOTE BOX OPERATION MANUAL.”

Table A1-1 Prober Control Cable Connection

Air Compressor Panel Terminals Number		J5	J6
Turnover-method Prober	512 ch HIFIX	Prober TH1	Short Contact Connector
	1024 ch HIFIX	Short Contact Connector	Prober TH1
Shaftlock-method Prober		Short Contact Connector	Prober TH1

APPENDIX 2. PHOTOELECTRIC SMOKE DETECTION SYSTEM

A2.1 Maintenance for Environmental Processor

Turn the receiver off and set the number of smoke sensors connected to the receiver using the DETECTOR NUMBERS knobs.

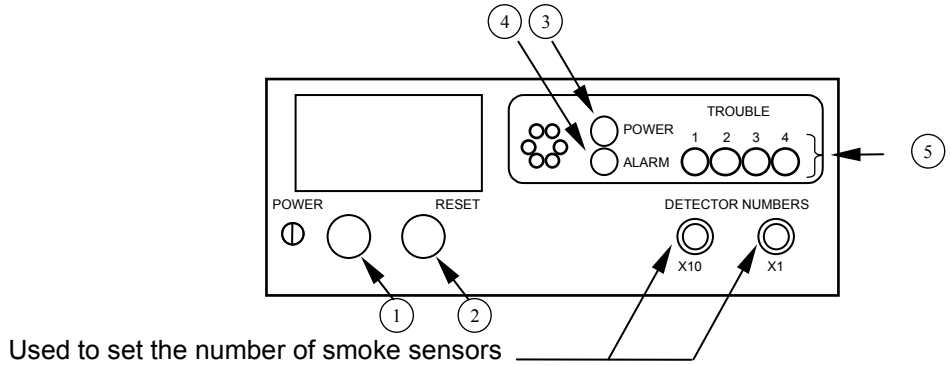

① POWER SW : Turns the detector system on or off.

② RESET SW : Resets smoke sensors which have caused alarms.

③ POWER Light : Turns on when the power is turned on.

④ ALARM Light : Turns on when smoke is detected.

⑤ TROUBLE Light : Turns on when a problem such as a wiring break occurs. (Refer to the Section A2.4, ”Workaround List.”)

- When the POWER switch is turned on, the ALARM and TROUBLE lights turn on in the order and the receiver is initialized for approximately one minute.
- After that, check that the ALARM and TROUBLE lights turn off.

- Be sure to turn the POWER switch off more than one minute after the switch was turned on. When the ALARM light turns on, an alarm sounds continuously. When TROUBLE lights are on, a beeping sound is activated.
- The sensor where the same address is assigned cannot be connected to the same receiver. (You can randomly assign the address number to sensors without duplicating an address.)
- Do not connect a terminator to the end of every smoke sensor.
- Do not use a jet sir gun to clean the fume sensor.

A2.2 Smoke Sensor Specifications

Normal Operation: The sensor LED turns on every ten seconds.

Alarm Condition: The sensor LED turns on every two seconds.

Abnormal Condition: The sensor LED does not turn on.

Note: Alarms occur when smoke is detected.

A2.3 Smoke Detection System Block Diagram

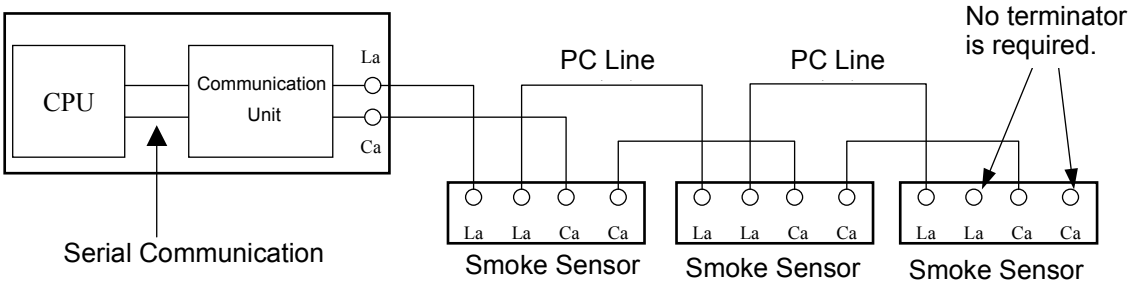

A2.4 Workaround List

A2.4.1 When TROUBLE Light Turns On

TROUBLE Light No. in the Receive	Smoke Sensor LED	Possible Causes	Suggested Courses of Action
1	OFF	• PC lines may be broken. • Smoke sensor lines may be broken. • The power may be abnormal on a PC line. • The smoke sensor voltage may drop to less than 9 V. • RCU test failure • A problem may have occurred in the smoke sensor E2PROM. • A write error may have occurred in the smoke sensor E2PROM. • The smoke sensor sensitivity may be inferior to its specification.	• Make sure that the PC lines are connected to the terminals of the receiver correctly. • Make sure that the PC lines are connected to the terminal of each smoke sensor correctly. • Check to see if any PC lines are broken. • Make sure that the smoke sensors are properly attached to each base correctly. • If any smoke sensors are not functioning, they must be replaced. (Contact ADVANTEST for more information.)
2	ON	The number of smoke sensors the receiver identifies is larger than the DETECTOR NUMBERS setting.	Change the setting to the current number of smoke sensors.
3		The number of smoke sensors the receiver identifies is smaller than the setting in DETECTOR NUMBERS.	
2,3	OFF	PC lines short-circuited.	Wire PC lines correctly.
4	ON	• DETECTOR NUMBERS is set at zero in the receiver. • DETECTOR NUMBERS is set at 22 or more in the receiver. • A communication unit error occurred.	• Check the DETECTOR NUMBERS setting in the receiver. • If there is something wrong with the communication unit, the receiver must be replaced. (Contact ADVANTEST for more information.)
		The receiver accepted alarm signal from more than four sensors. However, the amount of smoke detected was not high enough to activate an alarm. If this occurred, TROUBLE lights 1, 2 and 3 blink.	If this occurs, please contact ADVANTEST.

A2.4.2 When TROUBLE Lights are Flashing

TROUBLE Light No. in the Receive	Smoke Sensor LED	Possible Causes	Suggested Courses of Action
1,2,3,4	OFF	Though the receiver accepted an alarm signal from a sensor, the beeper did not sound and the internal TROUBLE relay does not open because the amount of smoke detected was not high enough to activate an alarm.	If this occurs, please contact ADVANTEST .

APPENDIX 3. SETTING GPIB-VME (H3-6815) MINI JUMPERS AND DIP SWITCHES

A3.1 Mini Jumper and DIP Switch Locations

The locations of the mini jumpers and DIP switches on the H3-6815 board are shown in Figure A3-1.

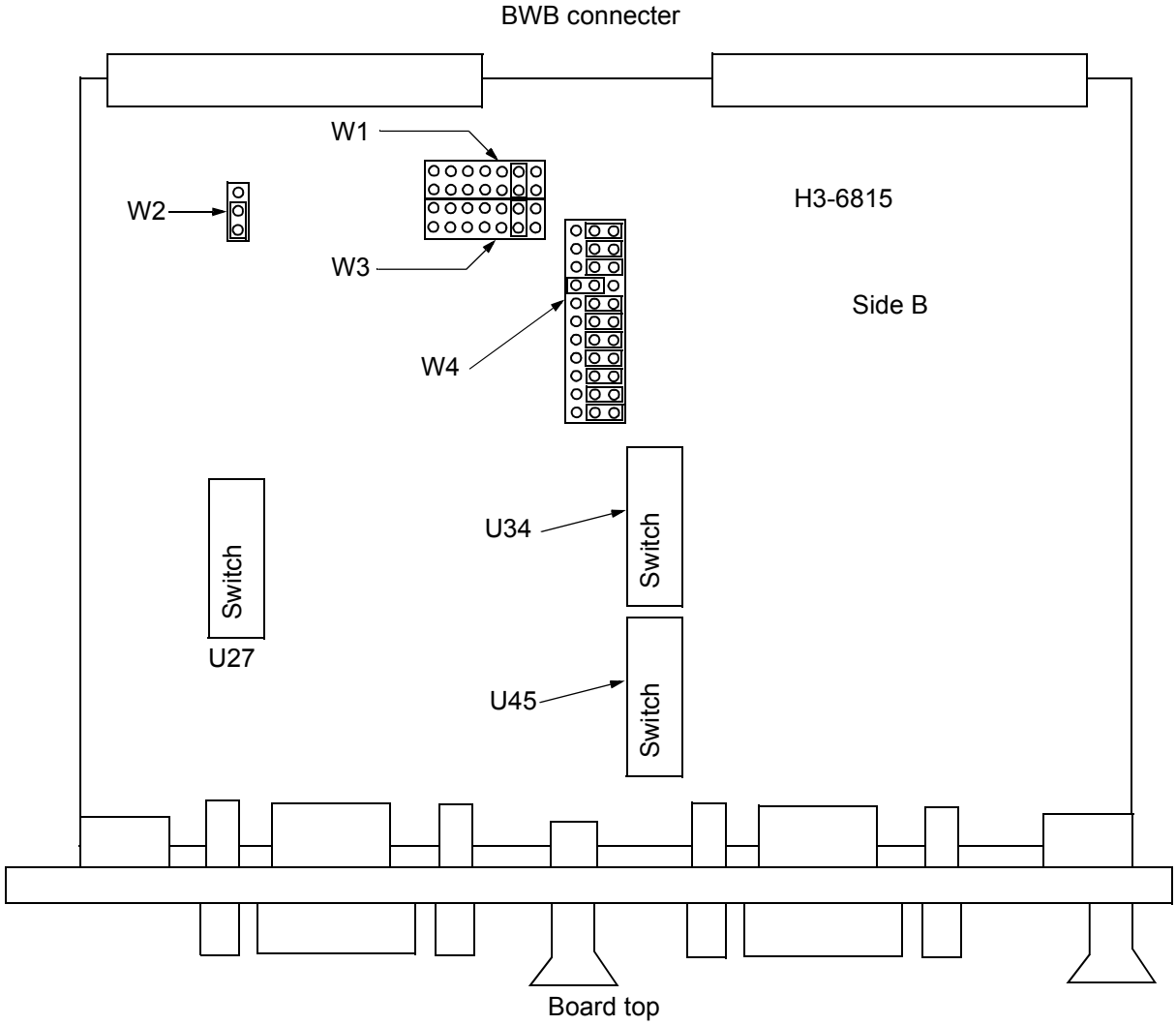

Figure A3-1 Mini Jumper and DIP Switch Locations

A3.2 Setting the First GPIB Board (Standard)

(1) VME Base Address (W4)

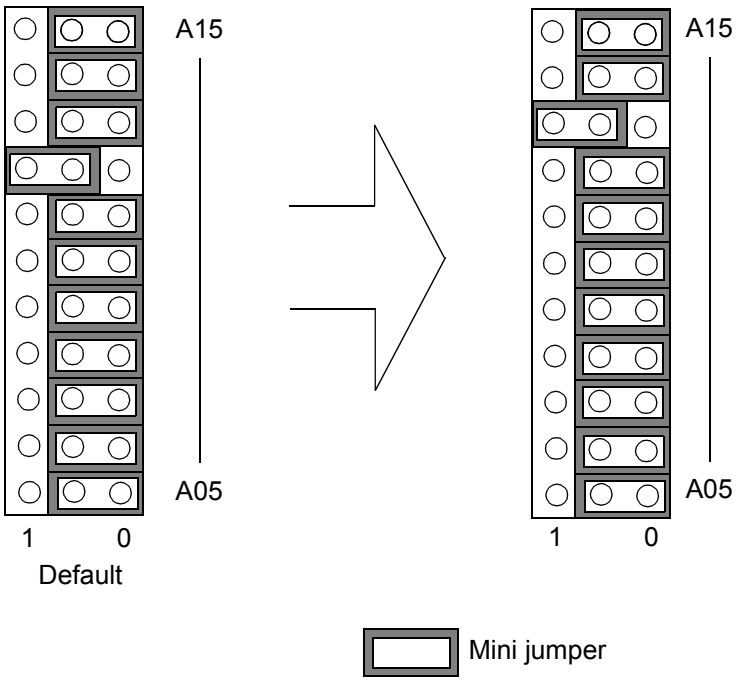

Figure A3-2 Setting VME Base Address (W4)

(2) Interrupt Line Code

You do not have to change W1 and W3. Confirm that they are set to the default settings as shown in Figure A3-3.

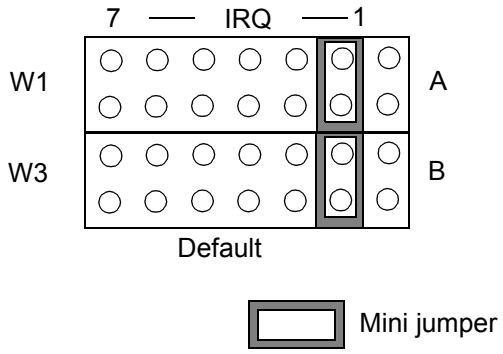

Figure A3-3 Settings of Interrupt Line Code (W1, W3)

(3) VMEbus Interrupt Priority Code

You do not have to change U27. Confirm that they are set to the default setting as shown in Figure A3-4.

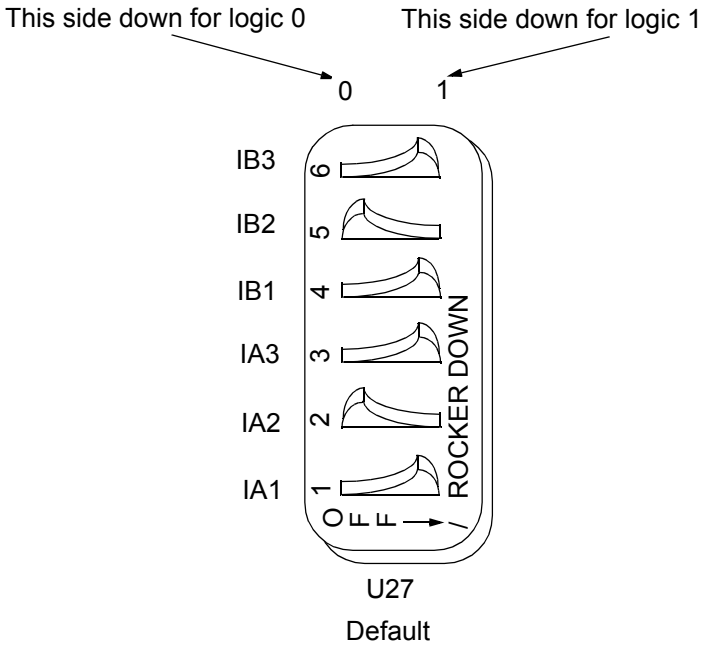

Figure A3-4 Settings of VMEbus Interrupt Priority Code (U27)

(4) Status/ID Byte 1A hex

The definitions for each bit of the DIP switches U34 and U45 are shown in Figure A3-5.

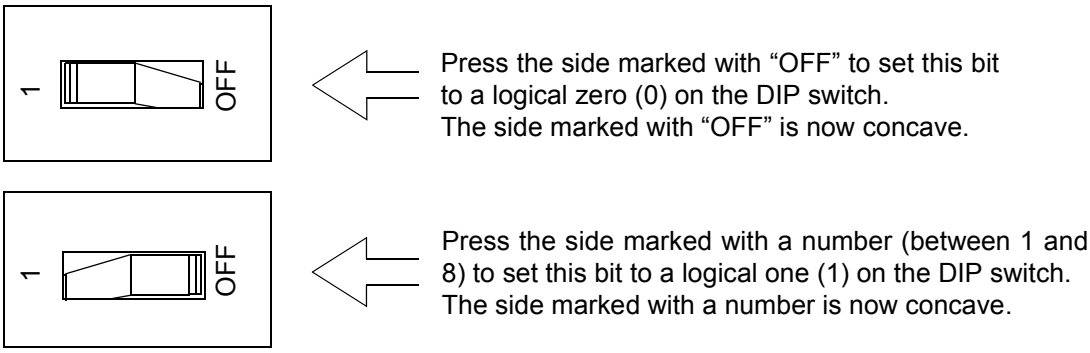

Figure A3-5 Definitions for Each Bit of the DIP Switches U34 and U45

- Setting Example for the DIP Switch U34

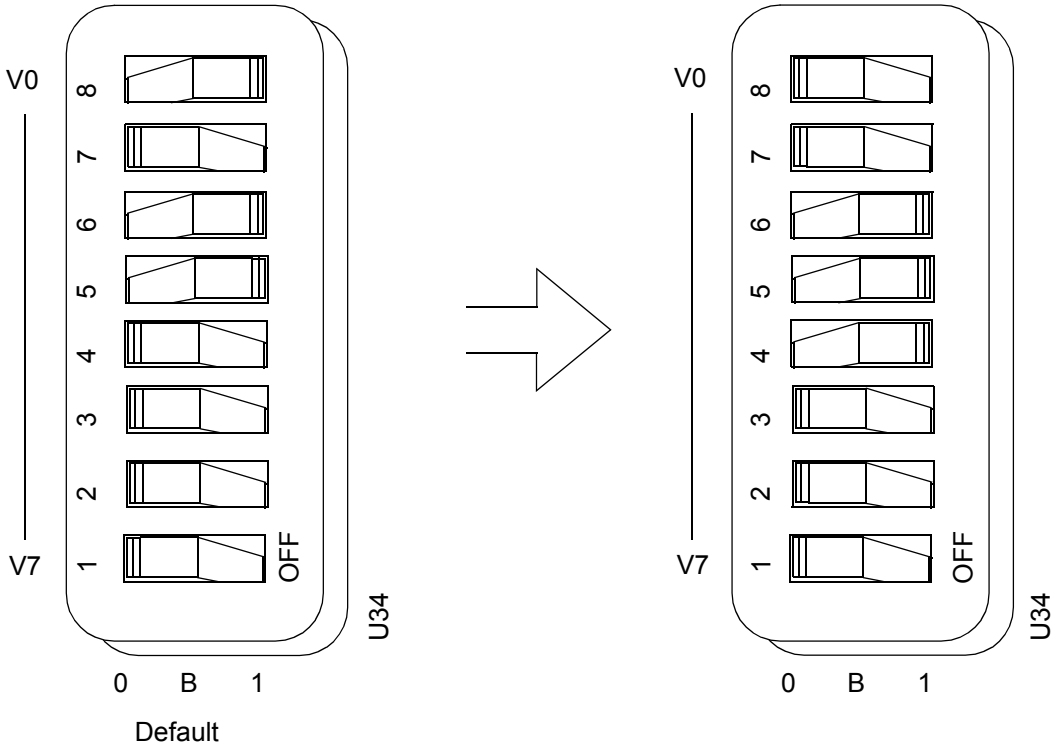

Figure A3-6 Setting Example for the DIP Switch U34

- Setting Example for the DIP Switch U45

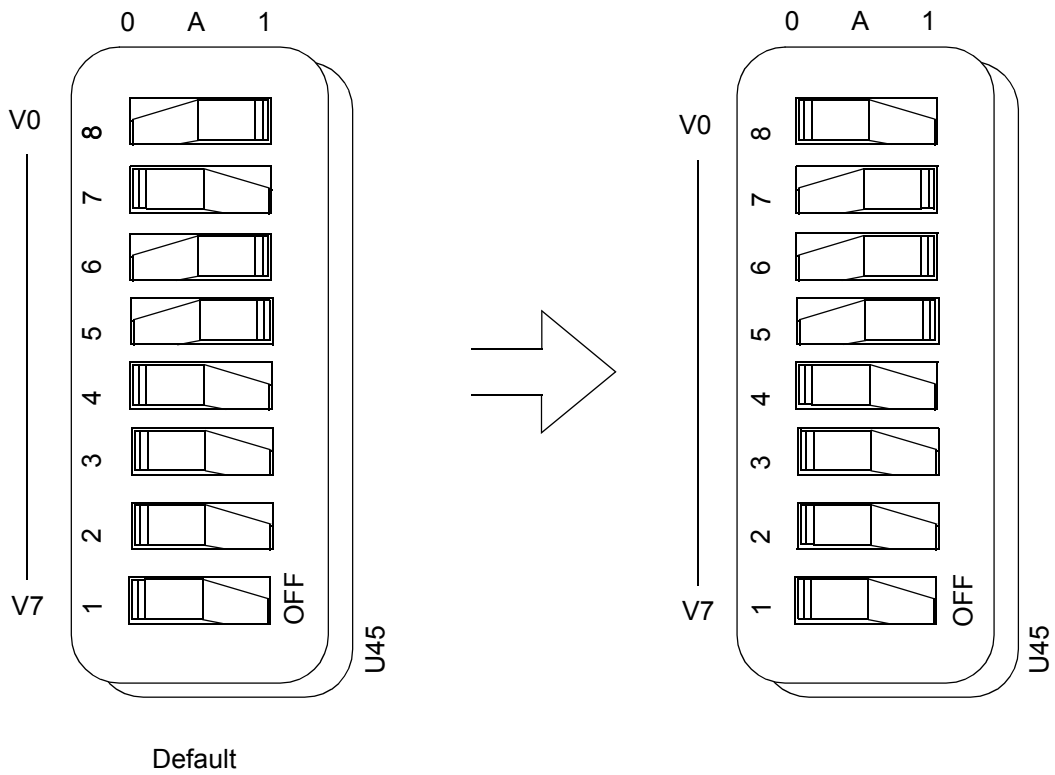

Figure A3-7 Setting Example for the DIP Switch U45

(5) Access Mode

You do not have to change W2. Confirm that they are set to the default setting as shown in Figure A3-8.

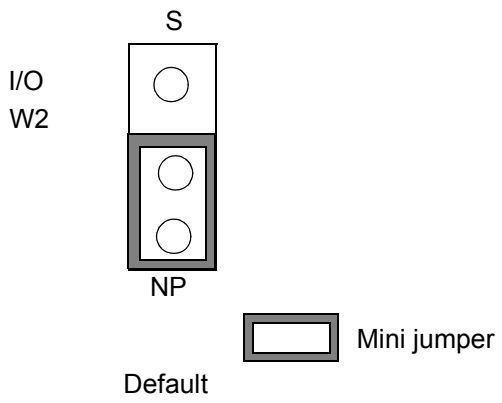

Figure A3-8 Setting of Access Mode (W2)

A3.3 Setting the Second GPIB Board (Optional)

(1) VME Base Address (W4)

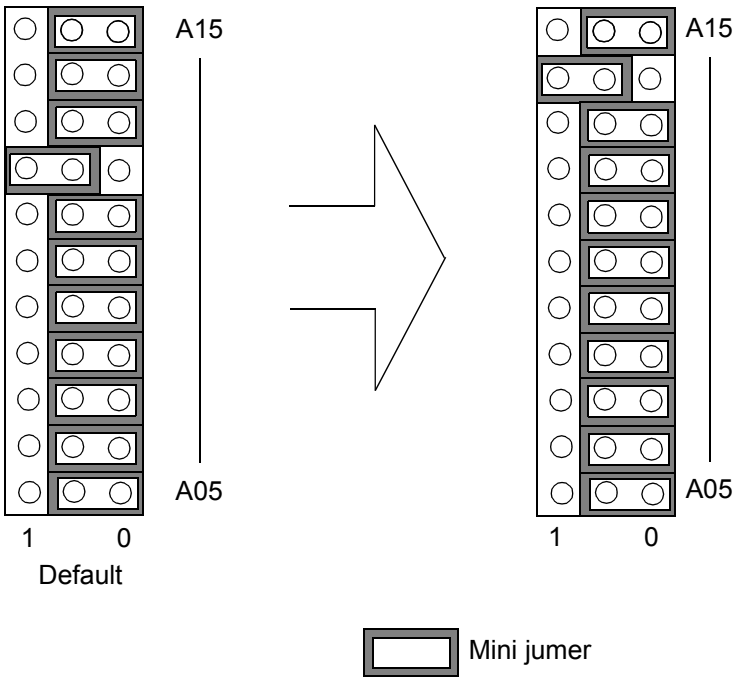

Figure A3-9 Setting of VME Base Address (W4) (Second GPIB Board Optional)

(2) Interrupt Line Code

You do not have to change W1 and W3. Confirm that they are set to the default settings as shown in Figure A3-10.

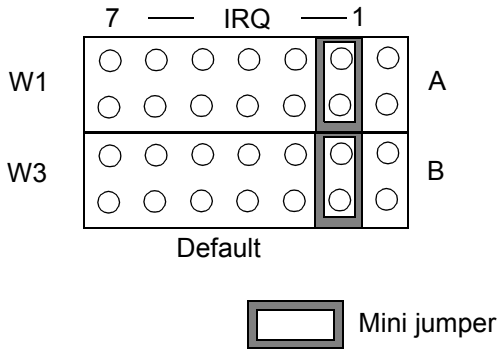

Figure A3-10 Settings of Interrupt Line Code (W1, W3) (Second GPIB Board Optional)

(3) VMEbus Interrupt Priority Code

You do not have to change U27. Confirm that they are set to the default setting as shown in Figure A3-11.

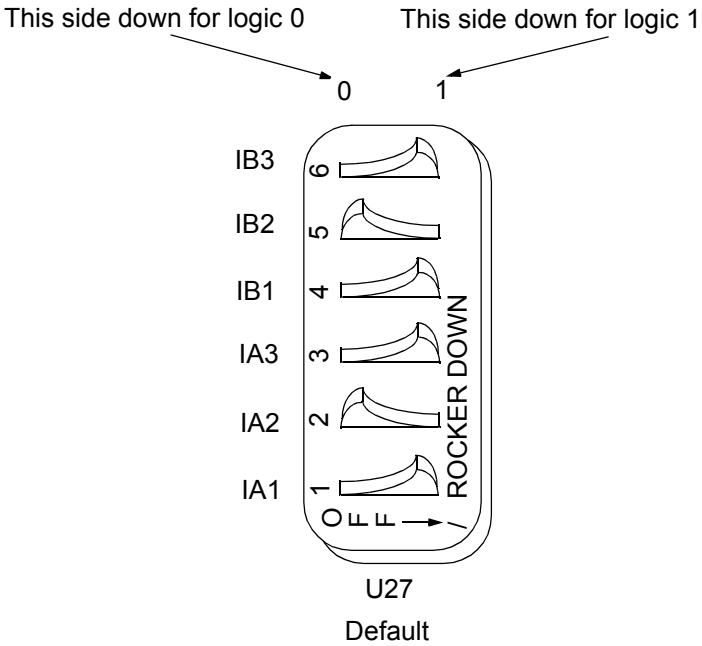

Figure A3-11 Settings of VMEbus Interrupt Priority Code (U27) (Second GPIB Board Optional)

(4) Status/ID Byte 1A hex

The definitions for each bit of the DIP switches U34 and U45 are shown in Figure A3-12.

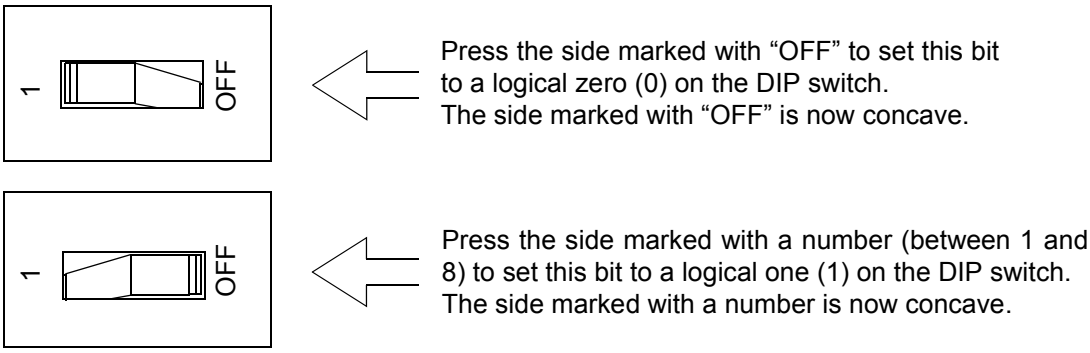

Figure A3-12 Definitions for Each Bit of the DIP Switches U34 and U45 (Second GPIB Board Optional)

- Setting Example for the DIP Switch U34

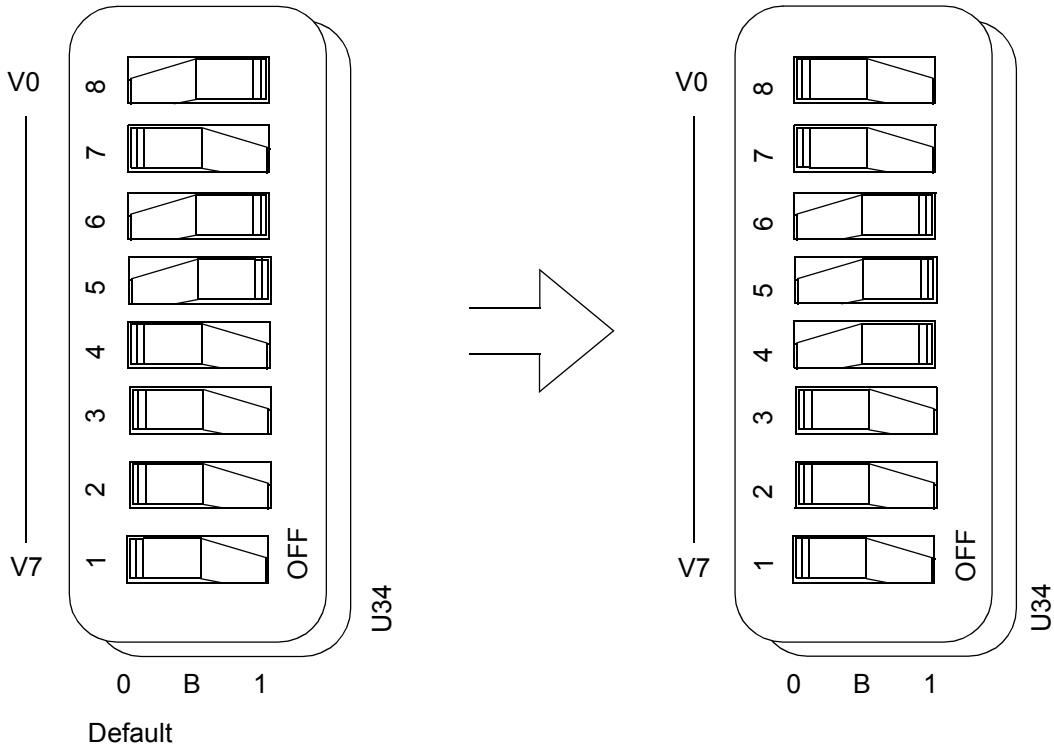

Figure A3-13 Setting Example for the DIP Switch U34 (Second GPIB Board Optional)

- Setting Example for the DIP Switch U45

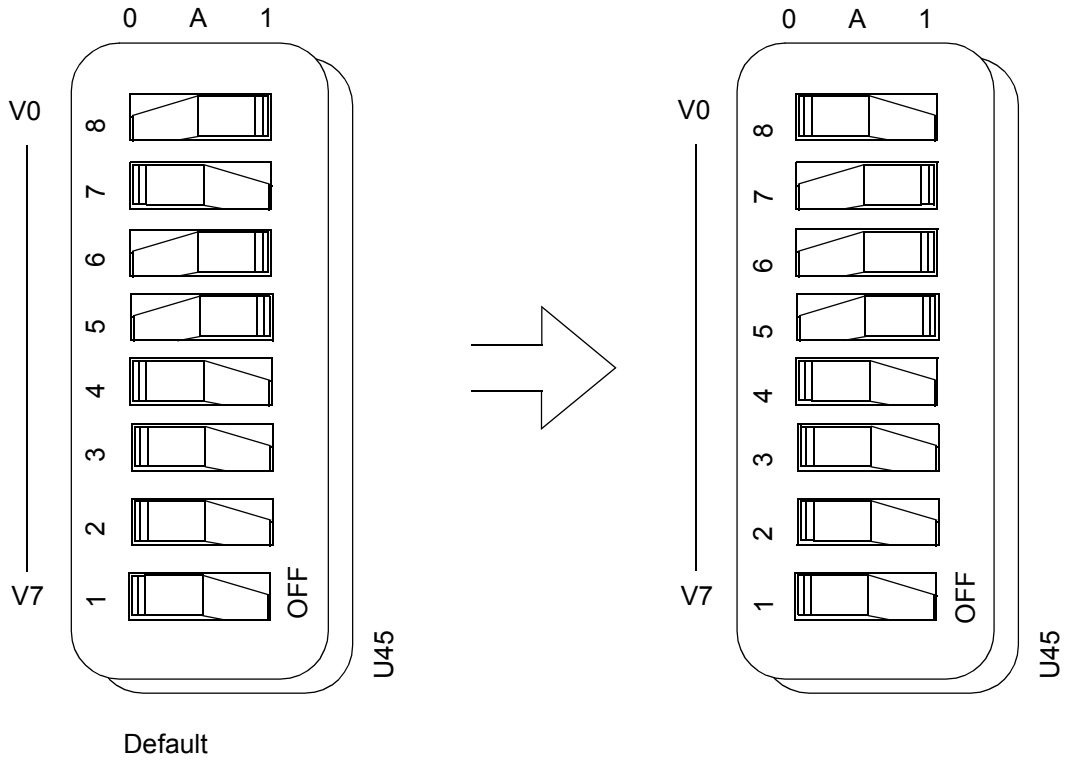

Figure A3-14 Setting Example for the DIP Switch U45 (Second GPIB Board Optional)

(5) Access Mode

You do not have to change W2. Confirm that they are set to the default setting as shown in Figure A3-15.

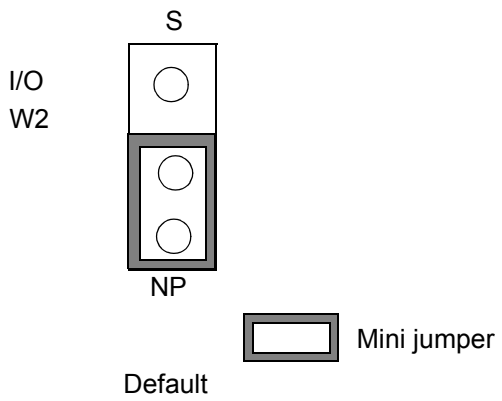

Figure A3-15 (Second GPIB Board Optional)

APPENDIX 4. SETUP FOR V0108 AND V0108A (TOTOKU 15-INCH LCD MONITOR)

A4.1 Setting the TC4 and TC7

(1) Shut down the TC4 or TC7. The EWS enters the ok prompt state.

(2) Enter the command as shown below. Note that the "↵" mark represents the return key, and an underlined part represents a command.

(a) TC4

```
ok setenv output-device screen:r1024x768x70↵
```

(b) TC7

```
ok setenv output-device screen:r1024x768x60↵
```

(3) Make sure that "output-device" is set using the printenv command.

(4) The TC4 or TC7 restarts if the following command is entered.

```
ok reset-all↵
```

A4.2 LCD Monitor Setup

A4.2.1 Location of the Screen Setting Buttons

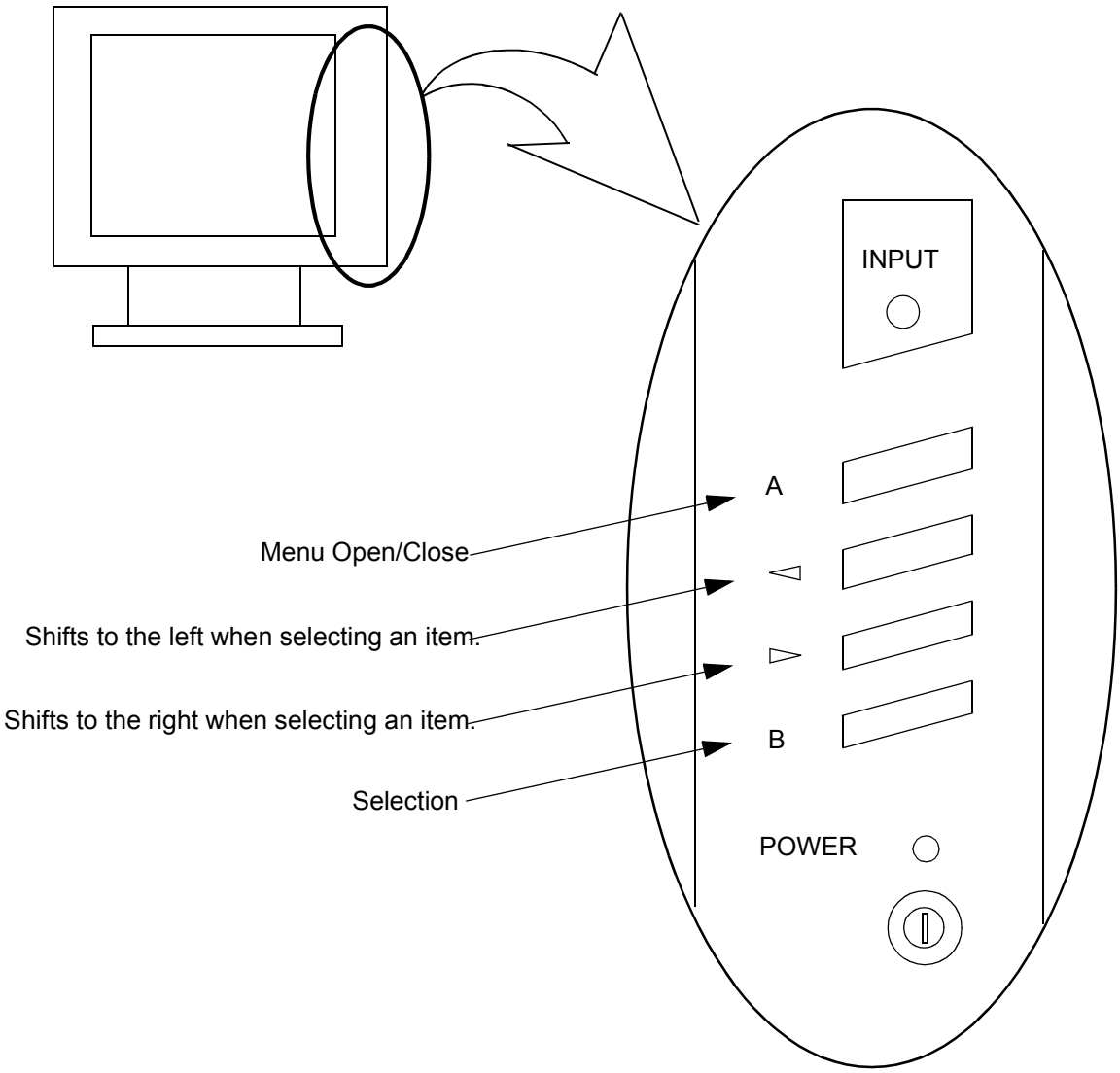

Figure A4-1 Location of the LCD Monitor Setup Buttons

A4.2.2 Screen Adjustment

(1) Press the “A” button.

(2) Select the screen shown below in the MENU screen.

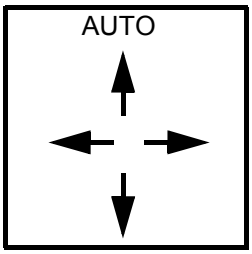

(3) Perform AUTO ADJUST using the ◁ or ▷ key.

Note: Before AUTO ADJUST is performed, set the TC4 or TC7 to the ok prompt status.

APPENDIX 5. DISK STORAGE JUMPER SETTING

A5.1 AHN-DK32DJ*36 and AHN-DK32EJ*36

DK32DJ or DK32EJ is printed on the HDA (top).

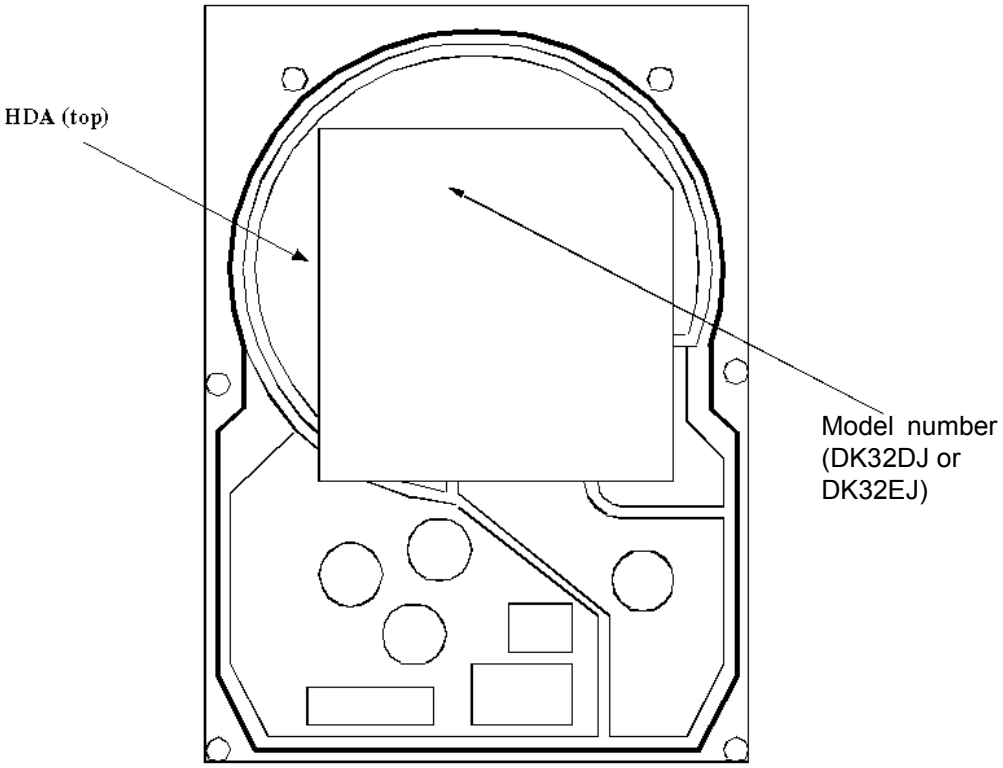

Figure A5-1 Hard Disk Top View

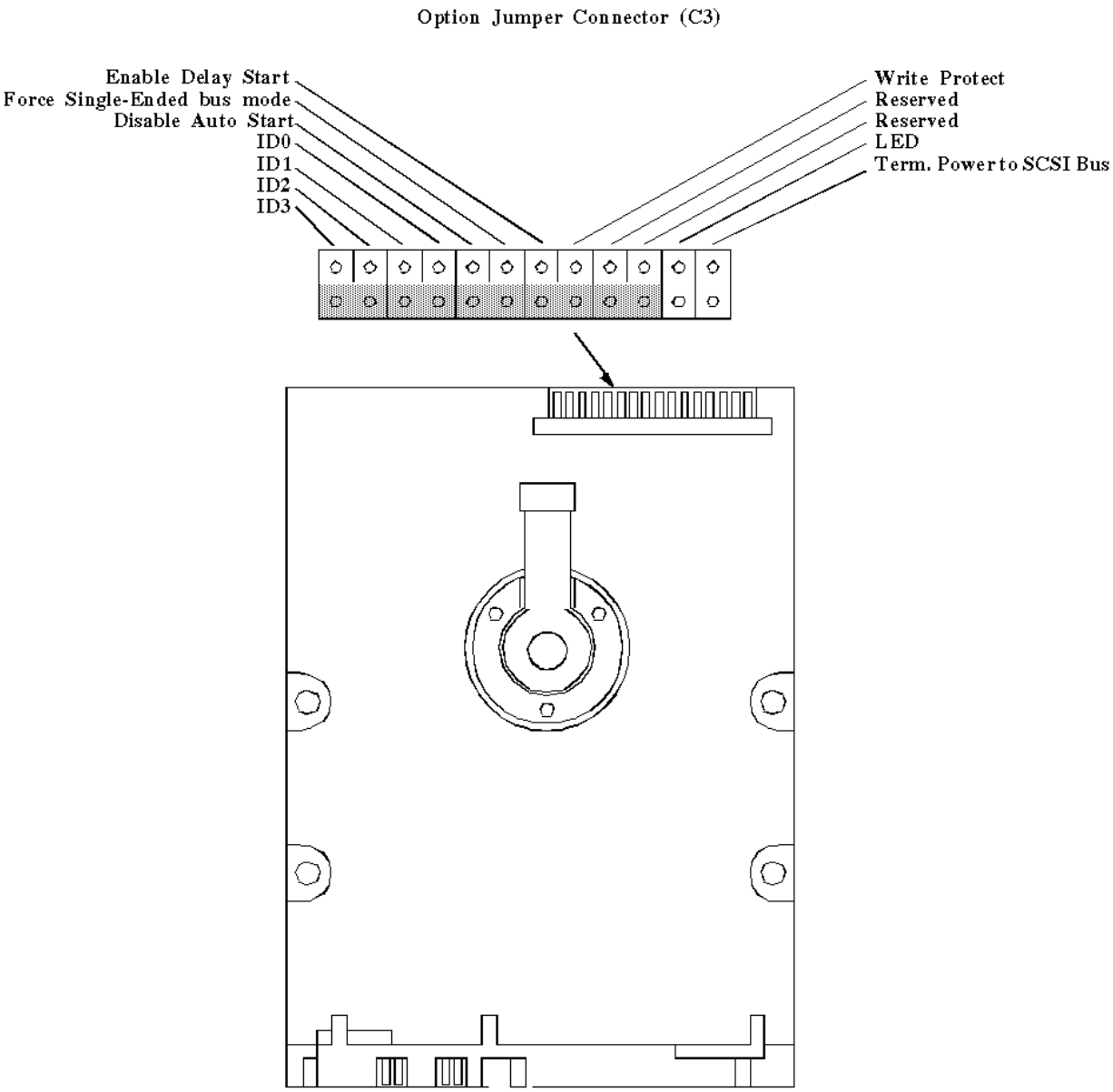

Figure A5-2 Hard Disk Bottom View

Storage Mini jumper setting Table

HD1	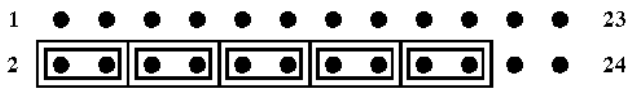
HD2	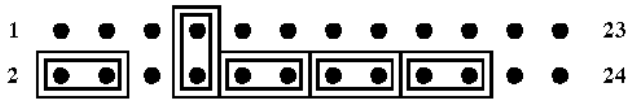

Figure A5-3 Mini Jumper Setting

APPENDIX 6. Errors that May Occur when TC7 Is Replaced and Solutions to those Errors

A6.1 Startup Errors

When replacing TC7, errors may occur and messages are displayed because graphic card versions of the old TC7 and new TC7 are different. Details of errors and their solution are described in the following sections:

A6.1.1 Panic Error that Occurs when the Operating System Starts

If a TC7 of version BAD or earlier is replaced with another TC7 of version BAD or later, the following panic error massage may be displayed when the operating system starts.

```
Boot device: disk File and args:
SunOS Release 5.8 Version Generic_108528-20 64-bit
Copyright 1983-2003 Sun Microsystems, Inc.  All rights reserved.
Cannot assemble drivers for root /pci@1d,700000/scsi@4/disk@0,0:a
Cannot mount root on /pci@1d,700000/scsi@4/disk@0,0:a fstype ufs

panic[cpu0]/thread=10408000: vfs_mountroot: cannot mount root

0000000010407970 genunix:vfs_mountroot+70 (10436000, 0, 0, 10438f78, 10, 14)
 %l0-3: 0000000010436000 00000000104398d8 000000033e000000 0000000010436428
 %l4-7: 0000000000000000 0000000010413878 00000000000bc27c 000000000000027c
0000000010407a20 genunix:main+8c (104101d0, 2000, 10407ec0, 10408030, fff2,  10051178)
 %l0-3: 0000000000000001 0000000000000001 0000000000000015 0000000000000f01
 %l4-7: 0000000010429190 0000000010465808 00000000000d44d0 00000000000004d0

skipping system dump - no dump device configured
rebooting...
```

This is because the SCSI controller installed on CPU boards of the old TC7 and new TC7 are different. For more information on solutions to this error, refer to Section A6.2.1, “Method for Installing the SCSI Driver.”

A6.1.2 Error that Occurs when the GUI Environment Starts

If the TC7 and the graphic card are replaced, the following error message is sometimes displayed instead of the DT log in screen when the test system power is turned on and Solaris starts:

```
*****************************************************************
*
* Starting Desktop Login on display :0...
*
* Wait for the Desktop Login screen before logging in.
*
*****************************************************************

*****************************************************************
*
* The X-sever can not be started on display :0...
*
*****************************************************************
```

This problem occurs because the graphic card mounted in the new TC7 is different from the graphic card mounted in the old TC7.

If this problem occurs, the CDE does not start but logging-in as a normal user or root user is possible.

The following describes the causes of this problem and the solutions:

(1) The Solaris device tree has not been updated because no boot -r command was executed when Solaris started after the TC7 was replaced.

For more information on updating the device tree, refer to method 1 in Section A6.2.2.2, “Method for Installing the Driver.” However, if Viewpoint OS R8.00 or R8.01 is used, refer to method 2 or 3 in Section A6.2.2.2, “Method for Installing the Driver.”

(2) The device driver for the graphic card that is mounted in the new TC7 has not been installed.

For more information on updating the device driver, refer to method 2 or 3 in Section A6.2.2.2, “Method for Installing the Driver.”

A6.2 Solutions

In the following description, underlines indicate that commands are entered by the user and ↵ indicates the return key is pressed.

A6.2.1 Method for Installing the SCSI Driver

Prepare the CD-ROM (SOLARIS 8 SOFTWARE HW5/03 1 of 2 (+mtp)).

(1) Insert the CD-ROM (SOLARIS 8 SOFTWARE HW5/03 1 of 2 (+mtp)) into the TC7 CD-ROM drive.

(2) Display the ok prompt by pressing the A key while holding the Stop key. Enter the following command to start the operating system in the single user mode, from the CD-ROM.

```
ok boot cdrom -s↵

     :
     :
     :
INIT: SINGLE USER MODE
#
```

(3) Enter the following commands to install each partition:

```
# mount /dev/dsk/c0t0d0s0 /mnt↵
#
# mount /dev/dsk/c0t0d0s3 /mnt/var↵
#
# mount /dev/dsk/c0t0d0s5 /mnt/opt↵
#
# mount /dev/dsk/c0t0d0s6 /mnt/usr↵
```

(4) Enter the following command to move to the directory where patches are stored:

```
# cd /cdrom/Solaris_8/Patches↵
#
```

(5) Enter the following command to install patches:

```
# patchadd -R /mnt 115275-06↵


Checking installed patches...
Verifying sufficient filesystem capacity (dry run method)...
Installing patch packages...
          :
          :
Patch number 115275-06 has been successfully installed.
See /mnt/var/sadm/patch/115275-06/log for details

Patch packages installed:
  SUNWcsr
  SUNWcsxu
  SUNWhea
  SUNWpd
  SUNWpdu
  SUNWpdx

#
```

(6) Enter the following commands and check that patches are installed:

```
# cd /mnt/var/sadm/patch↵
# ls | grep 115275-06↵
115275-06
#
```

(7) Shut down the operating system and quit the single user mode.

(8) Remove the CD-ROM (SOLARIS 8 SOFTWARE HW5/03 1 of 2 (+mtp)) from the CD-ROM drive.

(9) Start the operating system from the disk.

```
{0} ok boot -r↵
```

A6.2.2 Solution to the Error that Occurs when the GUI Environment Starts

A6.2.2.1 Differences of Graphic Cards

To judge whether the graphic cards which are mounted in the two TC7s are different, check the version of each TC7, which is described on the seal in the upper-left corner of the front of the TC7, or compare the shapes of the connectors.

The following shows the different versions and connectors of the two TC7s:

(a) If the version is AAB or ABB:

The graphic card: XVR-100

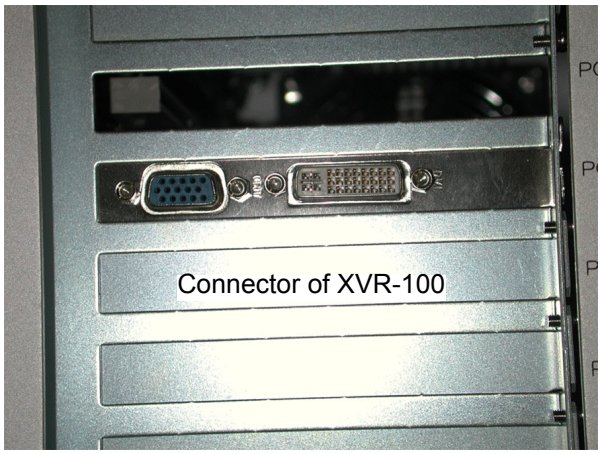

(b) If the version is neither AAB nor ABB:

The graphic card: XVR-500

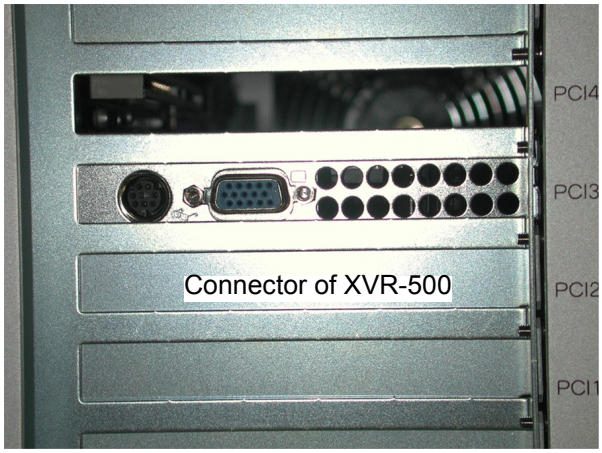

A6.2.2.2 Method for Installing the Driver

In the following description, underlines indicate that commands are entered by the user and ↵ indicates the return key is pressed.

- Method 1: Updating the device tree

  If the Viewpoint revision is either R8.00 or R8.01, refer to method 2 or 3, because these revisions are incompatible with both types of graphic card and method 1 cannot be used.

(1) Press the return key. The console input screen is output.

```
*****************************************************************
*
* Starting Desktop Login on display :0...
*
* Wait for the Desktop Login screen before logging in.
*
*****************************************************************

*****************************************************************
*
* The X-sever can not be started on display :0...
*
*****************************************************************
                                        ← Press the return key at this point.

console login:
```

(2) Log in as a root user and enter the following commands: ******** indicates a password.

```
console login : root↵
passwd : ********↵

    :
    :

#  reboot -- -r↵
```

- Method 2: Replacing the graphic card

  Replace the graphic card in the TC7 with the one in the new TC7. If the TC7 is replaced because the graphic card is faulty, refer to method 3.

- Method 3: Installing the device driver for the graphic card

(1) Prepare the CD (Solaris8 HW 5/03 1 of 2) for Solaris OS.

(2) Log in as a root user and insert the CD into the CD drive. For more information on how to log in as a root user, refer to method 1.

(3) Enter the following command to install the device driver.

If the TC7 version is AAB or ABB:

```
#  pkgadd -d /cdrom/cdrom0/s0/Solaris_8/Product SUNWpfbcf SUNWpfbmn SUNWpfbw
                                                                  SUNWpfbx.u↵

       :
       :
In response to all questions that are displayed after this, enter "y↵".
```

If the TC7 version is neither AAB nor ABB:

```
#  pkgadd -d /cdrom/cdrom0/s0/Solaris_8/Product SUNWifb.u SUNWifbcf
                                        SUNWifbr SUNWifbw SUNWifbx.u↵

       :
       :
In response to all questions that are displayed after this, enter "y↵".
```

(4) Remove the CD from the CD drive.

(5) To apply the installed driver, enter the following command and re-start the TC.

```
#  reboot -- -r↵
```