ADVANTEST®

ADVANTEST CORPORATION

T5371 MEMORY TEST SYSTEM

TESTER SECTION

MAINTENANCE MANUAL

MANUAL NUMBER 8339602-09

Applicable Test System
T5371

NOTE: Prior to performing any maintenance tasks described in this manual, thoroughly read the information related to the safety of the system provided in the "IC Test System Safe Handling Guide".

© 1999 ADVANTEST CORPORATION
All rights reserved.

First printing June 10, 1999
Printed in Japan

PREFACE

Scope of the Manual

This manual describes maintenance procedures for tester section, tester processor and environment processor section in T5371 Memory Test System. System maintenance by users may be basically performed by exchanging boards.

Defective board may be detected by executing diagnostic programs. Self-diagnostic programs have been individually provided for tester section and tester processor. Refer to the following manuals for executing procedures on these diagnostic programs.

- T5300 Series Memory Test System Tester Section Diagnostic Program/Initialize Program Operating Procedure
- ASX/U Test System Tester Processor Diagnostic Program Reference Manual

For maintenance of the environment processor section, see “W2345 EWS Maintenance Manual”.

Note that this manual does not describes maintenance information on an environment processor in details. Refer to the appropriate manuals provided by Sun Microsystems, Inc.

CAUTION!
As for maintenance work such as board relacement, only those persons who have completed the maintenance course at the technical training school are qualified.

Abbreviation of Tester Units

The meanings of the abbreviation of unit names used in this manual are shown below.

FTU ..... Function Test Unit
VIO ..... Voltage Input & Output Unit
DPU ..... DC test & Programmable Power Supply Unit
TP ..... Tester Processor Unit
TH ..... Test Head Unit (TH1, TH2)
RCPU ..... Repair CPU

Ultra 5 is a registerd trademark of Sun Microsystems, Inc.

RECORD OF REVISIONS

Manual Rev	Date	Remarks	Manual Rev	Date	Remarks
01	Jun 10/99				
02	Aug 30/99				
03	Nov 26/99				
04	Feb 10/00				
05	Jul 28/00				
06	Sep 20/00				
07	Nov 15/00				
08	Mar 22/01				
09	Sep 13/01				

LIST OF EFFECTIVE PAGES

	Preface	Jun 10/99	2-23	Sep 20/00	6-1	Jun 10/99
#	R-1	Sep 13/01	2-24	Sep 20/00	6-2	Jun 10/99
#	P-1	Sep 13/01	3-1	Jun 10/99	6-3	Jun 10/99
#	P-2	Sep 13/01	3-2	Jun 10/99	6-4	Jun 10/99
	M-1	Aug 30/99	3-3	Jun 10/99	6-5	Sep 20/00
	C-1	Nov 15/00	3-4	Jun 10/99	6-6	Sep 20/00
	C-2	Nov 15/00	3-5	Jun 10/99	6-7	Jun 10/99
	C-3	Nov 15/00	3-6	Jun 10/99	6-8	Jun 10/99
	F-1	Nov 15/00	3-7	Jun 10/99	6-9	Jun 10/99
	F-2	Nov 15/00	3-8	Jun 10/99	6-10	Jun 10/99
#	T-1	Sep 13/01	3-9	Jun 10/99	6-11	Jun 10/99
#	T-2	Sep 13/01	3-10	Jun 10/99	6-12	Jun 10/99
	1-1	Jun 10/99	3-11	Jun 10/99	6-13	Jun 10/99
	1-2	Jun 10/99	3-12	Jun 10/99	6-14	Jun 10/99
	1-3	Jun 10/99	3-13	Jun 10/99	6-15	Aug 30/99
	1-4	Jun 10/99	3-14	Jun 10/99	6-16	Jun 10/99
	1-5	Jun 10/99	3-15	Nov 26/99	6-17	Sep 20/00
	1-6	Jun 10/99	3-16	Jun 10/99	6-18	Sep 20/00
	1-7	Jun 10/99	3-17	Jun 10/99	6-19	Sep 20/00
	1-8	Jun 10/99	3-18	Aug 30/99	6-20	Sep 20/00
	1-9	Aug 30/99	3-19	Aug 30/99	6-21	Sep 20/00
	1-10	Aug 30/99	3-20	Aug 30/99	6-22	Sep 20/00
	2-1	Feb 10/00	3-21	Aug 30/99	6-23	Sep 20/00
	2-2	Feb 10/00	3-22	Aug 30/99	6-24	Sep 20/00
	2-3	Feb 10/00	3-23	Aug 30/99	6-25	Sep 20/00
	2-4	Feb 10/00	3-24	Aug 30/99	6-26	Sep 20/00
	2-5	Feb 10/00	3-25	Aug 30/99	6-27	Sep 20/00
	2-6	Feb 10/00	3-26	Aug 30/99	6-28	Sep 20/00
	2-7	Nov 15/00	4-1	Aug 30/99	6-29	Sep 20/00
	2-8	Aug 30/99	4-2	Jun 10/99	6-30	Sep 20/00
	2-9	Jun 10/99	4-3	Nov 15/00	6-31	Sep 20/00
	2-10	Aug 30/99	4-4	Nov 15/00	6-32	Jun 10/99
	2-11	Jun 10/99	4-5	Nov 15/00	6-33	Sep 20/00
	2-12	Jun 10/99	4-6	Nov 15/00	6-34	Jun 10/99
	2-13	Jun 10/99	4-7	Nov 15/00	6-35	Nov 15/00
	2-14	Jun 10/99	4-8	Nov 15/00	6-36	Nov 15/00
	2-15	Sep 20/00	4-9	Nov 15/00	6-37	Nov 15/00
	2-16	Sep 20/00	4-10	Nov 15/00	6-38	Nov 15/00
	2-17	Sep 20/00	4-11	Nov 15/00	6-39	Nov 15/00
	2-18	Sep 20/00	4-12	Nov 15/00	6-40	Nov 15/00
	2-19	Sep 20/00	4-13	Nov 15/00	7-1	Jun 10/99
	2-20	Mar 22/01	5-1	Jun 10/99	7-2	Jun 10/99
	2-21	Mar 22/01	5-2	Jun 10/99	7-3	Jun 10/99
	2-22	Nov 15/00	5-3	Jun 10/99	7-4	Jun 10/99

Note: Pages with # are revised.
Pages with ## are added.
Pages with ( ) are deleted.

List of Effective Pages

	7-5	Jun 10/99	A3-34	Nov 15/00	A4-3	Jul 28/00
	7-6	Jun 10/99	A3-35	Nov 15/00	A4-4	Jul 28/00
	7-7	Jun 10/99	A3-36	Mar 22/01	A4-5	Aug 30/99
	8-1	Jun 10/99	A3-37	Nov 15/00	A4-6	Aug 30/99
	8-2	Jun 10/99	A3-38	Nov 15/00	A5-1	Aug 30/99
	8-3	Jun 10/99	A3-39	Nov 15/00	A5-2	Aug 30/99
	8-4	Jun 10/99	A3-40	Nov 15/00	A5-3	Aug 30/99
	A1-1	Jun 10/99	A3-41	Nov 15/00		
	A1-2	Aug 30/99	A3-42	Mar 22/01		
	A1-3	Aug 30/99	A3-43	Mar 22/01		
	A1-4	Mar 22/01	A3-44	Mar 22/01		
##	A1-5	Sep 13/01	A3-45	Mar 22/01		
	A2-1	Jun 10/99	A3-46	Nov 15/00		
	A2-2	Jun 10/99	A3-47	Nov 15/00		
	A3-1	Aug 30/99	A3-48	Nov 15/00		
	A3-2	Nov 15/00	A3-49	Nov 15/00		
	A3-3	Aug 30/99	A3-50	Nov 15/00		
	A3-4	Aug 30/99	A3-51	Nov 15/00		
	A3-5	Aug 30/99	A3-52	Nov 15/00		
	A3-6	Aug 30/99	A3-53	Nov 15/00		
	A3-7	Aug 30/99	A3-54	Mar 22/01		
	A3-8	Aug 30/99	A3-55	Mar 22/01		
	A3-9	Aug 30/99	A3-56	Mar 22/01		
	A3-10	Aug 30/99	A3-57	Mar 22/01		
	A3-11	Mar 22/01	A3-58	Nov 15/00		
	A3-12	Mar 22/01	A3-59	Mar 22/01		
	A3-13	Nov 15/00	A3-60	Mar 22/01		
	A3-14	Nov 15/00	A3-61	Mar 22/01		
	A3-15	Nov 15/00	A3-62	Mar 22/01		
	A3-16	Nov 15/00	A3-63	Mar 22/01		
	A3-17	Nov 15/00	A3-64	Mar 22/01		
	A3-18	Nov 15/00	A3-65	Mar 22/01		
	A3-19	Nov 15/00	A3-66	Mar 22/01		
	A3-20	Mar 22/01	A3-67	Nov 15/00		
	A3-21	Mar 22/01	A3-68	Mar 22/01		
	A3-22	Nov 15/00	A3-69	Mar 22/01		
	A3-23	Nov 15/00	A3-70	Mar 22/01		
	A3-24	Nov 15/00	A3-71	Mar 22/01		
	A3-25	Nov 15/00	A3-72	Mar 22/01		
	A3-26	Mar 22/01	A3-73	Mar 22/01		
	A3-27	Nov 15/00	A3-74	Mar 22/01		
	A3-28	Nov 15/00	A3-75	Mar 22/01		
	A3-29	Nov 15/00	A3-76	Mar 22/01		
	A3-30	Nov 15/00	A3-77	Mar 22/01		
	A3-31	Nov 15/00	A3-78	Mar 22/01		
	A3-32	Nov 15/00	A4-1	Aug 30/99		
	A3-33	Nov 15/00	A4-2	Aug 30/99		

Note: Pages with # are revised.
Pages with ## are added.
Pages with ( ) are deleted.

LIST OF RELATED MANUALS

Manual No.	Manual Title
8130527	T5300 Series Memory Test Syatem Tester Section Diagnostic Program/Initialization Program Operating Procedure
8339602	T5371 Memory Test System Tester Section Maintenance Manual
8339658	MRA4 RCPU-A UNIT Diagnostic Program Manual
8335124	W2345 EWS Maintenance Manual
8201291	ASX/U Test System Tester Processor Diagnostic Program Reference Manual

TABLE OF CONTENTS

1 GENERAL 1-1

1.1 General Precautions 1-1
1.1.1 Environmental Conditions 1-1
1.1.2 Handling Precautions 1-1
1.1.3 Test Execution Precautions 1-2
1.1.4 Precautions for Board Replacement 1-2
1.1.5 Precautions for Abnormal Stop 1-2
1.1.6 Handling a breaker with an undervoltage release function 1-3
1.1.7 DMM (R6552T-R) Initialization 1-4
1.2 Periodical Check Items 1-5
1.3 Hot Work 1-10

2 CORRECTIVE ACTION FOR SYSTEM STARTING FAILURES 2-1

2.1 Corrective Action for System Starting Failures 2-1
2.2 Recovery From Fatal Test System Errors 2-10
2.3 TP Unit Auto Diagnosis Program 2-23

3 BOARD REPLACEMENT 3-1

3.1 How to Open Main Unit Panels 3-1
3.2 How to Connect/Disconnect Cables 3-3
3.3 Cable Markings 3-6
3.4 How to Insert and Extract Main Unit Boards 3-7
3.5 Installing and Removing the Test Head Installation Board 3-8
3.6 Location of Board Name 3-12
3.7 Precautions for Replacement with Spare Boards 3-13
3.7.1 Board Compatibility Version Check 3-13
3.7.2 Confirmation of Jumper Connection and Switch Set 3-14
3.7.3 Installing FTU Unit Boards 3-18
3.7.4 Installing the TP5 into the TP/VIO unit 3-19
3.8 Check Items Following Board Replacement 3-20
3.8.1 Execution of Diagnostic Program 3-20
3.8.2 Updating Version Data File 3-20
3.8.3 Loading/Saving Version Data File 3-23
3.8.4 Updating Timing Calibration Data 3-25
3.9 EXTENDER CARD 3-26

4 TESTER UNIT POWER SUPPLY 4-1

4.1 AC Power Supply Panel Layout 4-1
4.2 DC Power Supply Unit Layout 4-5
4.3 Replacing the DC Unit (Hot Work Type 1) 4-10
4.3.1 Removing Power Supplies 4-10

4.3.2 Notes when Installing the Power Supply Unit 4-11
4.4 PB Power Supply Protector 4-12
4.5 Replacing the AC Control Unit 4-13

5 SMALL PARTS REPLACEMENT 5-1

5.1 Replacing Fan Blocks (Hot Work Type 1) 5-1
5.1.1 Replacement of the Unit Power Supply Fan Block 5-1
5.1.2 Replacement of the Unit Fan Block 5-2

6 BOARD LOCATION OF TESTER UNIT AND CABLE CONNECTION 6-1

6.1 Unit Location in Tester Section 6-1
6.2 Slot Number and Board Name of Tester Unit 6-3
6.3 Connector Location of Tester Unit 6-8
6.4 Cable Connection Table of Tester Unit 6-17
6.5 Safety Unit Mounting Position 6-34
6.6 Center of Gravity and Mainframe Diagrams 6-38

7 TEST HEAD CONNECTOR PIN LAYOUT 7-1

8 PERFORMANCE BOARD HANDLING PRECAUTIONS 8-1

APPENDIX 1 SPARE PARTS KIT A1-1

APPENDIX 2 MAINTENANCE SUMMARY OF ENVIRONMENT PROCESSOR A2-1

A2.1 Maintenance for Environmental Processor A2-2

APPENDIX 3 MAINFRAME ASSEMBLY AND WIRING DIAGRAM A3-1

APPENDIX 4 MAINTENANCE OF AIR CONTROL PANEL UNIT .. A4-1

A4.1 Setting Air Pressure A4-1
A4.2 Cable Connection of Air Control Panel A4-2
A4.3 Booster Valve Check Procedure A4-5
A4.4 Residual Air Pressure Treatment A4-6

APPENDIX 5 PHOTOELECTRIC SMOKE DETECTION SYSTEM A5-1

A5.1 Maintenance for Environmental Processor A5-1
A5.2 Smoke Sensor Specifications A5-1
A5.3 Smoke Detection System Block Diagram A5-2
A5.4 Workaround List A5-2

5.4.1 When TROUBLE Light Turns On A5-2
5.4.2 When TROUBLE Lights are Flashing A5-3

LIST OF ILLUSTRATIONS

No.	Title	Page
1-1	ACCONT MAIN with an undervoltage release function	1-3
1-2	Removal of Cabinet Air Filter	1-7
1-3	Removal of TH (Test Head) Air Filter	1-8
1-4	Removal of Test Head Air Filter (for M6700 Series)	1-9
2-1	AC Power Supply Panel(MAIN ACCONT) and Pilot Lamp	2-5
2-2	AC Power Supply Sub Panel (SUB ACCONT) and Pilot Lamp	2-6
2-3	Transformer Box (TFB) Panel and Pilot Lamp	2-7
2-4	Ultra 5 Panel (REAR)	2-8
2-5	Sequence of Events When System Error Occurs	2-10
2-6	Procedure for Analyzing Fatal Test System Error	2-11
2-7	Board Top LED (1/5)	2-15
3-1	Rotation Frame Opening Method	3-2
3-2	Connecting/Disconnecting Top Board Connector (I)	3-3
3-3	Connecting/Disconnecting Top Board Connector (II)	3-4
3-4	Connecting/Disconnecting Top Board Connector (III)	3-4
3-5	Connecting/Disconnecting Top Board Connector (IV)	3-5
3-6	Example of Cable Marking	3-6
3-7	Board Handle	3-7
3-8	Board Insertion/Extraction	3-7
3-9	PE Card Drawing jig	3-8
3-10	Removing the PE card	3-8
3-11	TH	3-9
3-12	Metal Fittings for PE Position	3-10
3-13	Location of Board Name	3-12
3-14	Location of Version Marking	3-13
3-15	BGR-023126 (VIO I/F) Jumper Setting	3-14
3-16	TP5 Jumper Setting	3-15
3-17	BGR-022363 DPU I/F Jumper Setting	3-16
3-18	BGR-024410 FMCONT Jumper Setting	3-16
3-19	BIR-024571/X02 FTU I/F Jumper Setting	3-17
3-20	FTU Unit Board Name Locations	3-18
3-21	TP5 Unit Installation	3-19
4-1	AC Power Supply Panel (MAIN AC CONT)	4-1
4-2	AC Power Supply Panel (SUB AC CONT)	4-2
4-3	Transformer Box (TFB) Panel (for unit code KH3-71150)	4-3
4-4	Transformer Box (TFB) Panel (for unit code KH3-71383)	4-4
4-5	DC Power Supply Unit Layout (Rotating Base)	4-5
4-6	DC Power Supply Unit Layout (AC CONT Section)	4-6
4-7	Power Unit Removing	4-10
4-8	Cable Marker on Shunt Wiring Cable	4-11
4-9	PB Power Supply Protector	4-12
5-1	Replacement of the Unit Power Supply Fan Block	5-1

List of Illustrations

No.	Title	Page
5-2	Replacement of the Unit Fan Block	5-2
6-1	Unit Block Layout of Tester Main Frame	6-1
6-2	Terminal Block Layout of Tester Main Frame	6-2
6-3	Slot and Board Names of Test Head	6-7
6-4	Connector Location of PS MONITOR, FTU UNIT Board Top (1/5)	6-8
6-5	Connector Location of RCPU UNIT Board Top	6-13
6-6	Connector Location of RCPU UNIT Board Back (For systems with MRA4 installed)	6-14
6-7	Connecting the RCPU Back Board Cable	6-14
6-8	Connector Location of TP/VIO UNIT Board Top	6-15
6-9	Connector Location of DPU UNIT Board Top	6-16
6-10	Tester Bus Connection Diagram(1/2)	6-32
6-11	Safety Unit Mounting Position	6-34
6-12	Tester Section Smoke Detector Diagram (FAN Sensor) (When the transformer unit code is KH3-71150)	6-35
6-13	Tester Section Smoke Detector Diagram (FAN Sensor) (When the transformer unit code is KH3-71383)	6-35
6-14	Tester Section Smoke Detector Diagram (TEMP Sensor)	6-36
6-15	Tester Section Smoke Detector Diagram (SMOKE Sensor) (When the transformer unit code is KH3-71150)	6-36
6-16	Tester Section Smoke Detector Diagram (SMOKE Sensor) (When the transformer unit code is KH3-71383)	6-36
6-17	Safety Unit Position(Test Head)	6-37
6-18	Center of Gravity of the Mainframe	6-38
6-19	Engineering Workstation Frame	6-39
6-20	Structure of the Mainframe	6-40
7-1	Connector Pin Layout on Pin Card (PE33A1, PE41A1)	7-1
7-2	Connector Pin Layout on Pin Card (PE33A3, PE41A3)	7-2
7-3	Connector Pin Layout on Pin Card (PE33C1, PE41C1)	7-3
7-4	Connector Pin Layout on Pin Card (PE33C3, PE41C3)	7-4
7-5	Connector Pin Layout on Cal & Sig Board (AB side/CD side)	7-5
7-6	Connector Pin Layout on Cal & Sig Board (EF side/GH side)	7-6
7-7	Connector Pin Layout on Option Pin Card (PEOPA, PEOPC)	7-7
A4-1	Air Control Panel Unit (Front View)	A4-1
A4-2	BLG-025612 Air Control Panel Assembling Figure (Front View)	A4-4

LIST OF TABLES

No.	Title	Page
1-1	Periodical Check Items	1-6
2-1	Failure Procedure Order in System Activation	2-3
2-2	Interrupt Causes and Units (1/3)	2-20
2-3	TP Unit Auto Diagnosis Program	2-24
3-1	Boards Requiring Jumper Connection or Switch Setting Check	3-14
3-2	List of EXTENDER CARD	3-26
4-1	DC Power Supply Unit Specifications (1/3)	4-7
6-1	Slot No. and Board Name of FTU(1/2)	6-3
6-2	Slot No. and Board Name of TP/VIO	6-5
6-3	Slot No. and Board Name of RCPU [For systems with MRA4 installed]	6-5
6-4	Slot No. and Board Name of RCPU2 [For systems with MRA4 installed]	6-5
6-5	Slot No. and Board Name of DPU	6-6
6-6	RCPU/RCPUA2 Cable Connection(1/3)	6-17
6-7	CBOX Cable Connection	6-20
6-8	Tester Processor Cable Connection	6-20
6-9	DPU Cable Connection	6-20
6-10	PS MOINTOR Cable Connection	6-21
6-11	FTU Cable Connection (1/3)	6-22
6-12	TH Cable Connection (1/7)	6-25
6-13	Tester Bus Cable Connection (1/2)	6-33
A1-1	Spare Parts Kit A	A1-1
A1-2	Spare Parts Kit B	A1-1
A1-3	Spare Parts Kit C	A1-1
A1-4	Spare Parts Kit C1	A1-2
A1-5	Spare Parts Kit C2	A1-2
A1-6	Spare Parts Kit D	A1-2
A1-7	Spare Parts Kit E	A1-2
A1-8	Spare Parts Kit F	A1-2
A1-9	Spare Parts Kit G	A1-2
A1-10	Spare Parts Kit I	A1-3
A1-11	Spare Parts Kit J	A1-3
A1-12	Spare Parts Kit K	A1-3
A1-13	Spare Parts Kit L (MRA4 Support)	A1-3
A1-14	Spare Parts Kit M (MRA4 Support)	A1-3
A1-15	Spare Parts Kit N (MRA4 Support)	A1-3
A1-16	Spare Parts Kit O (MRA4 Support)	A1-4
A1-17	Spare Parts Kit P	A1-4
A1-18	Spare Parts Kit Q (MRA4 Support)	A1-4
A1-19	Spare Parts Kit R (MRA4 Support)	A1-4

List of Tables

No.	Title	Page
A1-20	Spare Parts Kit S	A1-4
A1-21	Spare Parts Kit T	A1-4
A1-22	Spare Parts Kit U	A1-5
A4-1	Booster Valve Check List	A4-5

1 GENERAL

1.1 General Precautions

1.1.1 Environmental Conditions

(1) Always operate the T5371 within the environmental condition ranges specified in the Product Description (installation plans). Operating at temperatures above the specified limit results in shortening of the test system operational life.

(2) If the humidity exceeds the humidity limit for operation when the test system is not being used, always ensure that the humidity is returned to an acceptable level before commencing operation. Also note that magnetic tape units may fail to operate correctly if conditions become too dry.

If an air conditioning system is used and relative humidity may become less than 20%, ensure that it also includes a humidifier unit.

(3) Hard disk units are extremely delicate and must not be subjected to undue vibration, even when not being operated. If the unit needs to be moved at some time, first contact your nearest ADVANTEST office.

(4) The test system generates a large quantity of heat, and this is dissipated by an air cooling system. Airborne dust etc, however, accumulating in the test system over long periods of time will reduce the cooling efficiency, again resulting in shortening of operational life. After the system has been installed, the installation should be kept extremely clean and be made a “no smoking” area.

1.1.2 Handling Precautions

(1) Start and stop the tester according to the procedures described in ADVANsite Test System Software Installation/System Start User’s Manual.

(2) Furthermore, remove magnetic tapes from the magnetic tape unit when the unit is not being used, and store the tapes in proper storage facilities. Always ensure that the floppy disk unit power is on when replacing floppy disks.

(3) Always make sure the doors, panels, and station cover of the tester are in their proper positions when the tester is used.

(4) The device power line outputs and driver outputs on the performance board must not be purposely short circuited with each other or to ground.

Do not use external power supplies with the performance board. Always use VCC on the performance board independent of tester section. If any other power voltages are required, always use DC/DC converters with the VCC power supplies.

(5) Switch the tester power on and off as little as possible.

(6) Press the START switch on the AC control panel of the test system (the READY lamp should light), and turn on the power supply of the environment processor section.

1.1.3 Test Execution Precautions

(1) Like bipolar devices, MOS devices can easily be destroyed by electrostatic when being handled.

Whenever handling devices readily susceptible to this kind of destruction, always use the accessory ground bands supplied with the tester.

(2) When using an oscilloscope to observe input/output waveforms during device test execution, always ensure that the ground terminal of the measuring equipment is properly connected to the tester ground before making contact with the probe.

When disconnecting, always remove the probe first before disconnecting the ground connections.

CAUTION!
The AC CONT output of T5371 is only 200 VAC.
Never connect T5371 with the measuring equipment having AC input specifications of 100 VAC.

(3) When starting the tester, always wait for the tester to warm up according to the warm-up time (30 minutes) specified in the Product Description.

1.1.4 Precautions for Board Replacement

(1) Always ensure that the tester power is off whenever mounting or unmounting the board.

Always handle the board with great care when mounting and unmounting. And never place boards on an electrified object.

(2) Boards with identical standard name and identical version(compatible version) for the tester are perfectly compatible, so that no adjustment is required for board replacement.

In the meantime, it is always necessary to update the (/CLRCAL/A) board revision management files and the calibration management files when replacing any board. See Section 3.8 for the further information.

(3) Always ensure that the earth band is attached whenever mounting or unmounting the board in environment processor section.

1.1.5 Precautions for Abnormal Stop

When the power supply is stopped by external factor (blackout etc.), the file system will have a possibility to be damaged. When activating the system after the damage, the environment processor command FSCK (File System Check) recover the damage automatically as much as possible. However, when the damage is much great, the FSCK asks how to dispose. For further details, refer to FSCK of “Command Reference Manual” in Sun Micro Systems, Inc.

1.1.6 Handling a breaker with an undervoltage release function

The undervoltage release function turns the power off by tripping the main breaker when the EMO switch is pressed.
The undervoltage release function can be enabled only when the breaker is switched to the ON position. To perform this function, use the momentary actuation switch located next to the breaker.

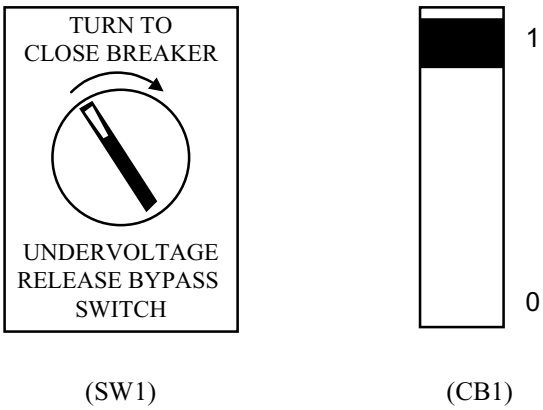

Figure 1-1 ACCONT MAIN with an undervoltage release function

Procedure 1: Close all doors of the mainframe.

Procedure 2: Turn the SW1 "UNDERVOLTAGE RELEASE BYPASS SWITCH" clockwise with your left hand and hold it there.

Procedure 3: At the same time with your right hand, switch the CB1 breaker to 0 to reset it and then switch it back to 1 to turn the breaker on.

Procedure 4: Turn the SW1 back and turn the SUB AC CONT breaker on. (The procedure is the same as Procedure 3.)

CAUTION!

If the ACCONT MAIN CB1 is not turned on, the undervoltage release function of other breakers cannot be enabled.
Make sure to turn the CB1 breaker on first.

DANGER!

There is an electric shock hazard.
The primary voltage (200 VAC) is still being applied to the yellow lines even with the breaker turned off.

1.1.7 DMM (R6552T-R) Initialization

(1) GPIB address setting

To set the GPIB address or turn the header on or off use the Panel key.

	Key Operation	Display	
①	I/F	HA 01	Displays the previous setting
②	AUTO → / UP △ / DOWN ▽	HA 25	Turns the header on sets the tester as "addressable" and the GPIB address to 25.
③	ENTER	gP on	Make sure the setting ends.
④	ENTER	measurement value	End

(2) For R6552T-R operation in details, refer to “R6552 Digital Multimeter Operation Manual”.

1.2 Periodical Check Items

CAUTION!
To prevent access to the power control, please attach the label "EQUIPMENT BEING SERVICED. DO NOT OPERATE." to the breaker switch in the AC Control Unit panel when the test system is being serviced.
When test systems have a breaker that can be locked, be sure to lock the breaker.
For the procedure of locking and tagging the breaker switch, refer to Chapter "2. Basic Precaution" of "IC Test System Safe Handling Guide".

(1) The tester should be checked periodically to ensure that it maintains its initial level of performance. Check items are listed in Table 1-1.

(2) The operational life of the reed relay used in the test station pin card is rated at approximately 1×10^8. Hence, the reed relay will have to be replaced after 1×10^8 relay operations.

(3) The HV2 station requires the air source below to mount or demount the performance board using air.

Air source: Dry air of 0.49 to 0.69 MPa
Air consumption: 5 to 10 Nℓ/min

When the water and oil contained in the air remain in a drain pipe, apply cloth to the drain section of the drain pipe for draining so that the water and oil do not adhere to the electrical components (board, cable and so on) at the bottom.

Table 1-1 Periodical Check Items

	Measuring section	Tester processor	Environment Processor
Performed at system start		Diagnosis by self-diagnostic program when power is turned on	Diagnosis by self-diagnostic program when power is turned on
Performed weekly	Diagnosis by system diagnostic program	Diagnosis by tester processor diagnostic program	
Performed monthly	Confirm operation of cooling fan in the test system Clean air filters in cabinets/TH (Figure 1-2)		Check that the cooling fans used for Ultra 5, the optional hard disk and the cartridge MT unit are operating correctly.
Performed quarterly			Check up using the diagnostic program
Performed semiannually			Clean the air intakes of Ultra 5, the optional hard disk and the cartridge MT unit.
Performed annually			

Note: ***For periodical check items of peripheral equipment, refer to "APPENDIX 2, MAINTENANCE SUMMARY OF ENVIRONMENT PROCESSOR".***

① Boards Unit Air Filter

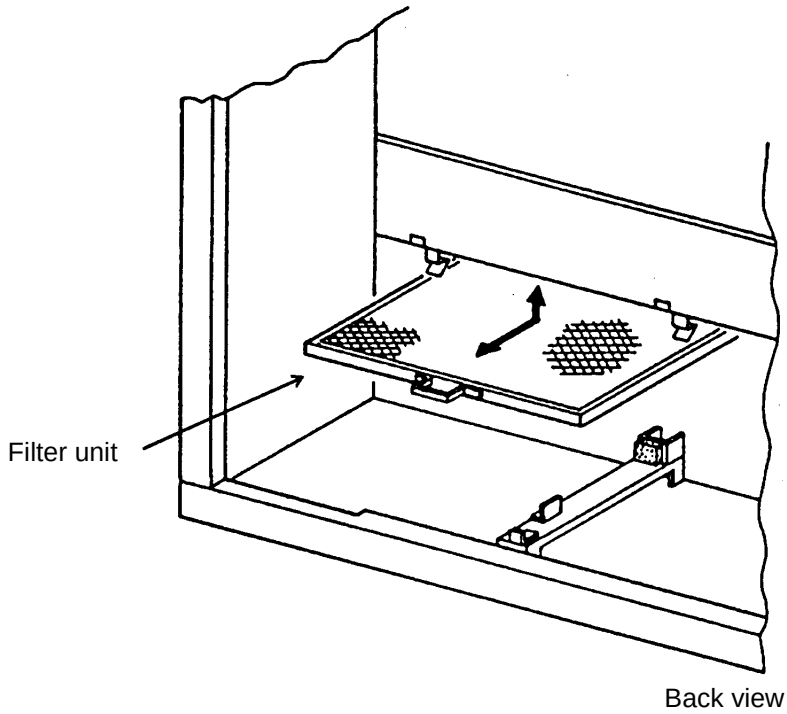

② Power Supplies Unit Air Filter

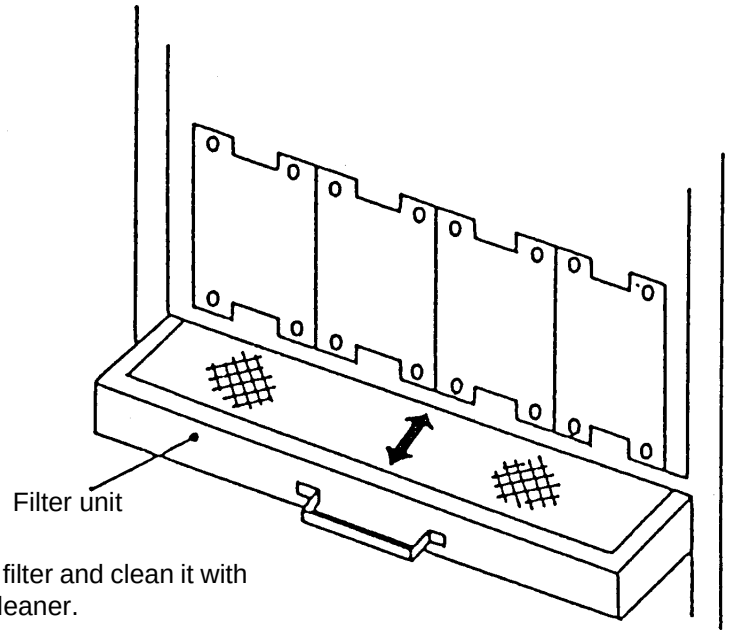

Remove air filter and clean it with
a vacuum cleaner.

Figure 1-2 Removal of Cabinet Air Filter

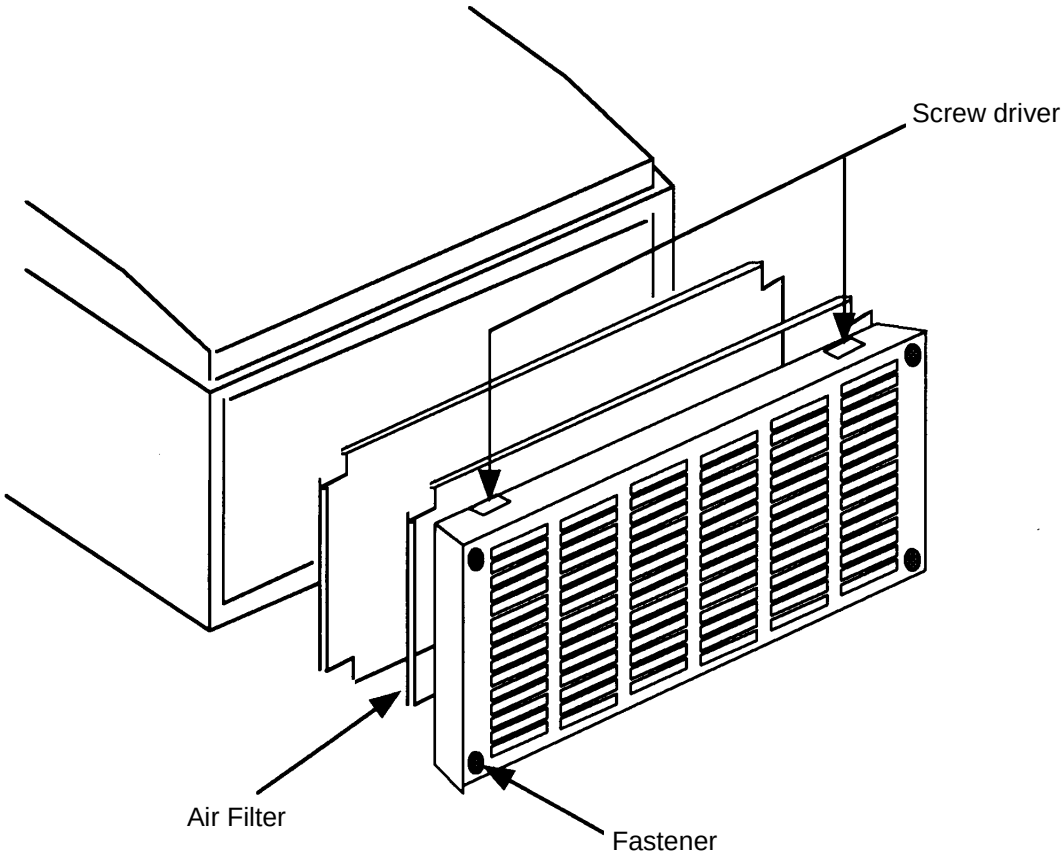

Remove air filter and clean it with a vacuum cleaner.

Figure 1-3 Removal of TH (Test Head) Air Filter

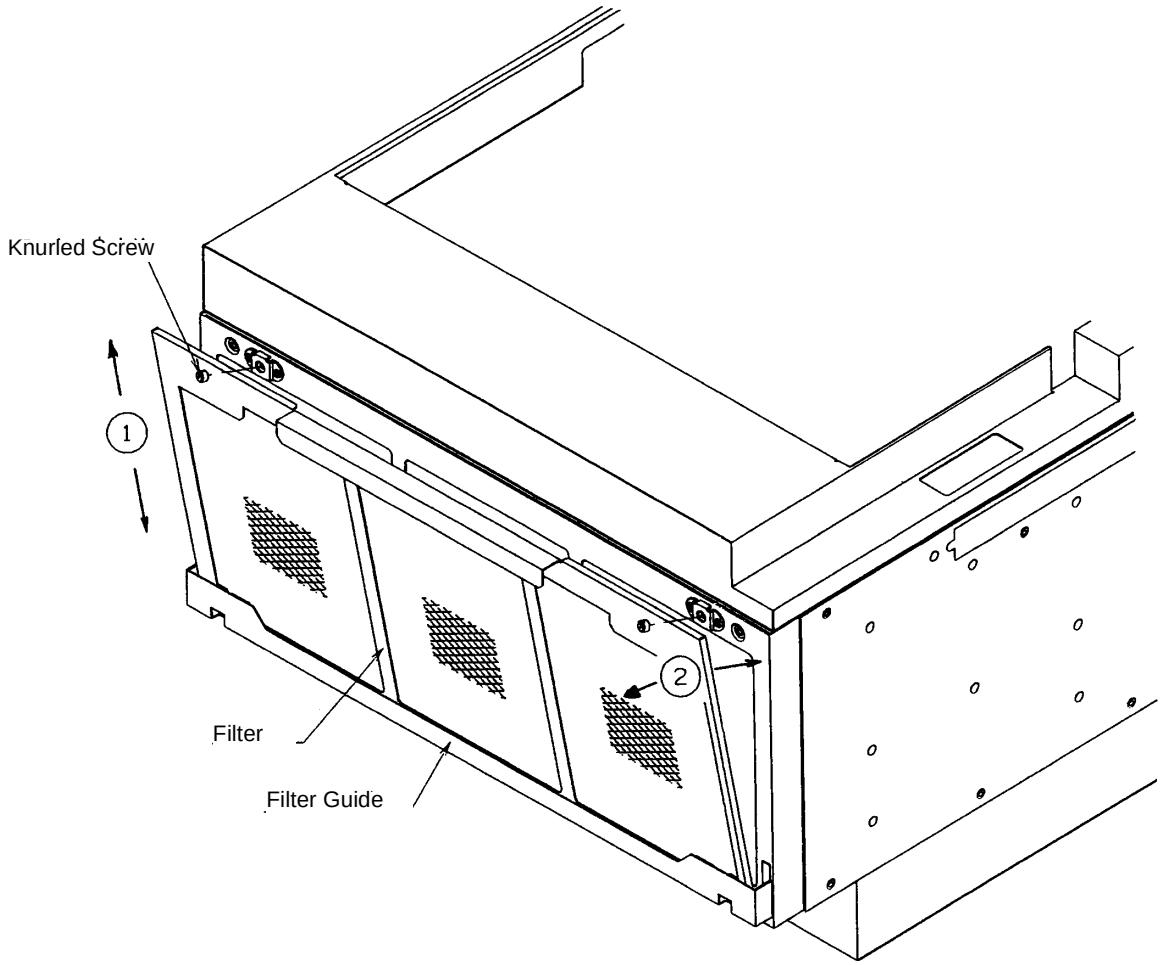

① Turn the knurled screws in the upper part of the filter counterclockwise.
② Remove the filter from the filter guide in the lower part of the rear cover.
Clean the filter with a vacuum cleaner.

Figure 1-4 Removal of Test Head Air Filter (for M6700 Series)

1.3 Hot Work

Hot work, calibrating or maintaining an activated test system, is categorized as follows:
Maintenance and calibration procedures list the hot work type.
In Type 3 through 5, be careful not to receive an electric shock.

Type 1: Equipment is not activated.

Type 2: Equipment is activated, however, there is no risk of touching any energized parts.

Type 3: Equipment is activated and there is risk of touching energized parts.
The electrical energy is less than 30rmsV, 42.2peakV or 240VA.

Type 4: Equipment is activated and there is risk of touching energized parts.
The electrical energy is equal to or greater than 30rmsV, 42.2peakV or 240VA, or radio frequency energy is present.

Type 5: Equipment is activated and the service engineer must enter the equipment to test or adjust it.

2 CORRECTIVE ACTION FOR SYSTEM STARTING FAILURES

Note : ***In the test system, the tester processor and tester section, and the environment processor (SUN Ultra 5) section are separately activated. The power is supplied to the environment processor by pressing the "START" switch [READY lamp] on AC control panel. The power is supplied to the tester processor and tester section by turning the power-on key switch ON.***

2.1 Corrective Action for System Starting Failures

Ensure according to the following procedures.

[Operation 1]: Supply AC200V power to the test system.
The test system requires the power for AC200V 3 system.

[Check 1]: Ensure that the "ALARM" lamp [yellow] of the AC control panel in the front of the T5371 system's main frame cabinet is lighting. When the lamp is not lighting, [Procedure 1] is performed.

[Operation 2]: Press the "START" switch on AC control panel.

[Check 2]: Ensure that the power switch on the front of graphic monitor has been pressed. When the switch has not been pressed, [Procedure 2] is performed.

[Check 3]: The self-diagnosis program is executed, following a sound (pi). When normally completed, system banner is displayed on graphic monitor to start the memory test. [Procedure 2] is performed in the failure.

```
Sun Ultra 5/10 UPA/PCI (Ultra SPARC-IIi XXXMHz), Keyboard Present
OpenBoot X.XX, XX MB memory installed, Serial #XXXXXXXX.
Ethernet address 8:0:20:XX:XX:XX, Host id: 80XXXXXX.
```

[Check 4]: When memory test is normally completed, go to the boot-up process. After each daemon finishes activating, log-in prompt is displayed on graphic monitor. [Procedure 3] is performed in the failure.

```
Boot device: disk File and args:
SunOS Release 5.X Version Generic_XXXXXX-XX[UNIX(R) System V Release 4.0]
Copyright (c) 1983-1997, Sun Microsystems, Inc.
Configuring network interfaces: hme0.
Hostname: XXXXXXX
The system is comming up. Please wait.
                                    .
                                    .
                                    .
volume management starting.
The system is ready.

XXXXXXX console login:
```

The activation of environment processor is completed by the above. File edition and file operation exceeding network are available in this condition.

(Function of environment processor section only is available if tester section is not activated.)

Tester processor and tester section are activated according to the following procedure.

[Operation 3]: Turn the “POWER” switch on AC control panel ON.

[Check 5]: Test system completes the power suppliance sequence for approx. 2 to 3 seconds. When the power cannot be supplied, [Procedure 1] is performed.

[Check 6]: The “ALARM” lamp [yellow] lights OFF and the “RUN” lamp [green] lights ON. Ensure that any “TP SDIAG” LED on AC control panel is lighting OFF (Condition that TP power-on self-diagnosis has been normally completed). [Procedure 4] is performed in the failure.

The activation of tester processor and tester section is completed by the above.

In the following, ensure the linkage between environment processor and tester processor according to the following procedure.

[Operation 4]: Log in by “asx” to input test command.

[Check 7]: The message “CONTROLLER READY” is displayed.
In the failure, go to [Procedure 5].

```
hostname % test <cr>
CONTROLLER READY
```

Check of linkage between environment processor and tester processor is completed by the above.

Procedure in failure occurrence is shown in Table 2-1.

Table 2-1 Failure Procedure Order in System Activation

Procedure items	Check content
Procedure 1	① Ensure that AC200V is supplied to test system. Ensure that any breaker is ON by pilot lamp (PL) lighting. (see Figure 2-1, Figure 2-2 and Figure 2-3.) ② Make sure that fuses F6 and F7 do not blow. If either of them has blown, the main breaker CB1 will not turn on.
Procedure 2	① Ensure that Power lamp (green or orange) is lighting ON by pressing the power switch on graphic monitor. ② Ensure that power cable of graphic monitor is plugged in to outlet. ③ Ensure that the power on LED (green) on front of the main unit of the environment processor is lighting ON. ④ Ensure that the power switch of processor main body is turned on and the power cable is connected to outlet. ⑤ Ensure that power cable is connected between system disk (H9-1241).
Procedure 3	When an error is occurred during test memory, consider environment processor (Ultra 5) as failure. Contact to service engineer.
Procedure 4	① Ensure that DC voltage is properly supplied to the unit by using the voltage monitor panel. ② Ensure that system abnormal interruption is not occurred. ③ Ensure that tester bus is normally connected. ④ If a leak occurs, the ground-fault circuit interrupter LED lights in red. Check to see if this LED is red. Figure 2-1 and Figure 2-2 show the location of the ground-fault circuit interrupter. After the leak has been stopped, the main breaker must be turned off before using the test system again. The EWS and other peripherals are also turned off when the main breaker is turned off, so turn the EWS off using its own shutdown process before doing this. ⑤ Make sure that all fan circuit protectors are turned on in the AC power supply panel. (See Figure 4-1 and Figure 4-2.)

Procedure items	Check content
Procedure 5	① Ensure that cable between environment processor and tester processor is tightly connected. ② Execute diagnosis program if there is a problem on I/F board to connect tester processor in environment processor. For the execution method of diagnosis program, refer to “W2345 EWS Maintenance Manual”. ③ Some failure is considered on TP side. Execute TP diagnosis program from environment processor. Executive order is referred to “W2345 EWS Maintenance Manual”.

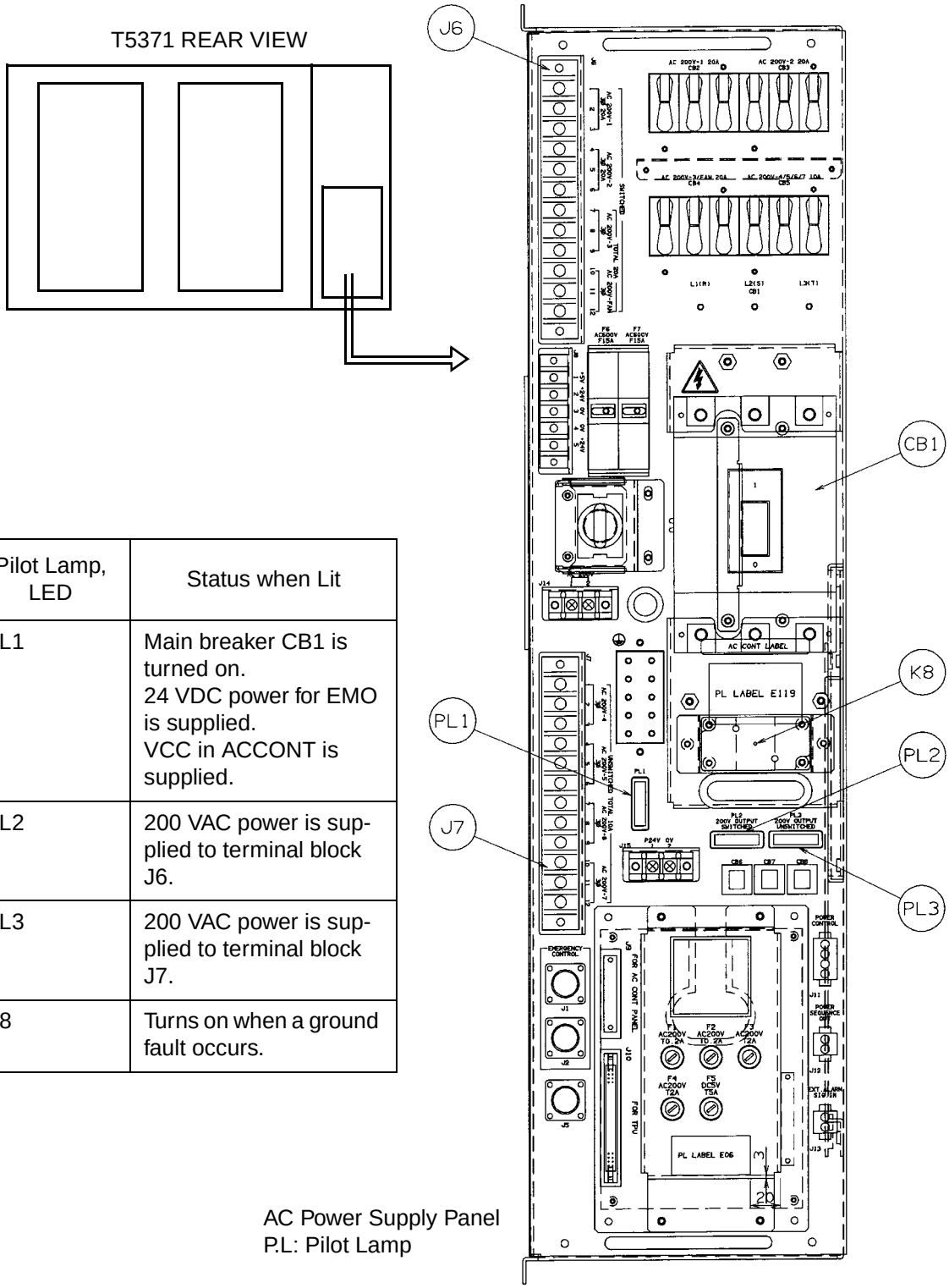

Pilot Lamp, LED	Status when Lit
PL1	Main breaker CB1 is turned on. 24 VDC power for EMO is supplied. VCC in ACCONT is supplied.
PL2	200 VAC power is supplied to terminal block J6.
PL3	200 VAC power is supplied to terminal block J7.
K8	Turns on when a ground fault occurs.

Figure 2-1 AC Power Supply Panel(MAIN ACCONT) and Pilot Lamp

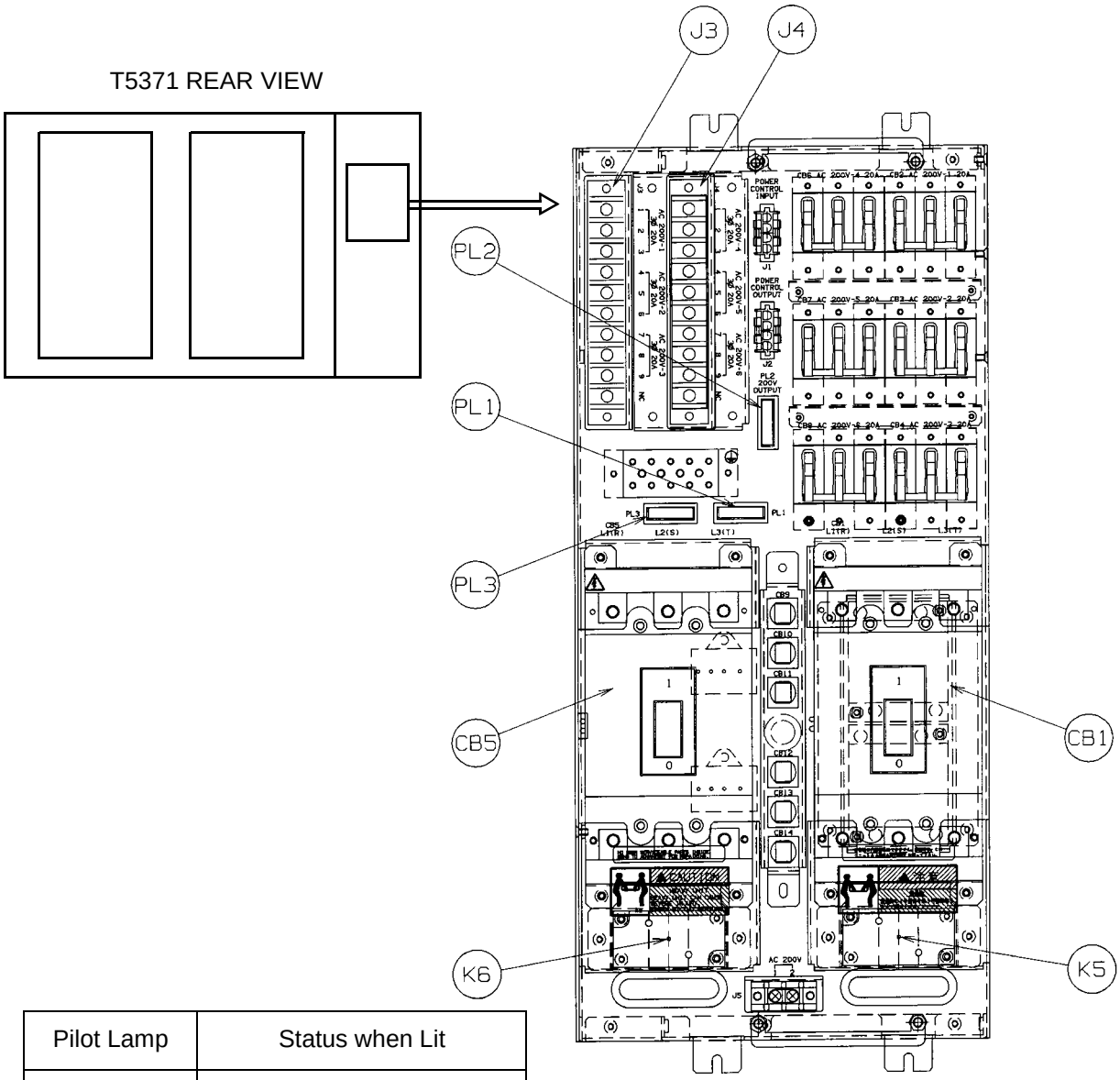

Pilot Lamp	Status when Lit
PL1	Main breaker CB1 is turned on.
PL2	200 VAC power is supplied to terminal blocks J3 and J4 in SUB AC CONT.
PL3	Breaker CB5 is turned on
K5, K6	Turns on when a ground fault occurs.

Figure 2-2 AC Power Supply Sub Panel (SUB ACCONT) and Pilot Lamp

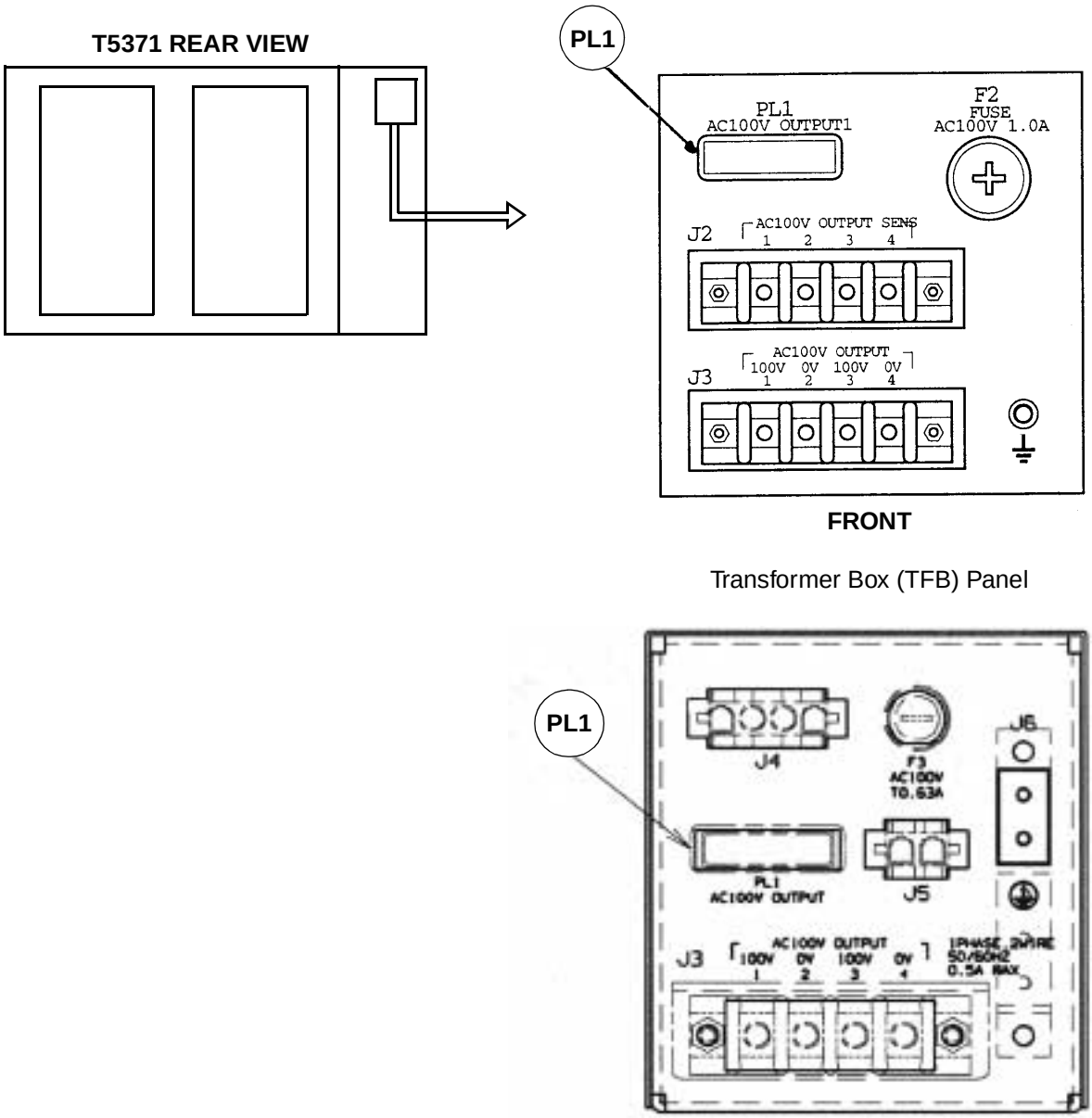

Figure 2-3 Transformer Box (TFB) Panel and Pilot Lamp

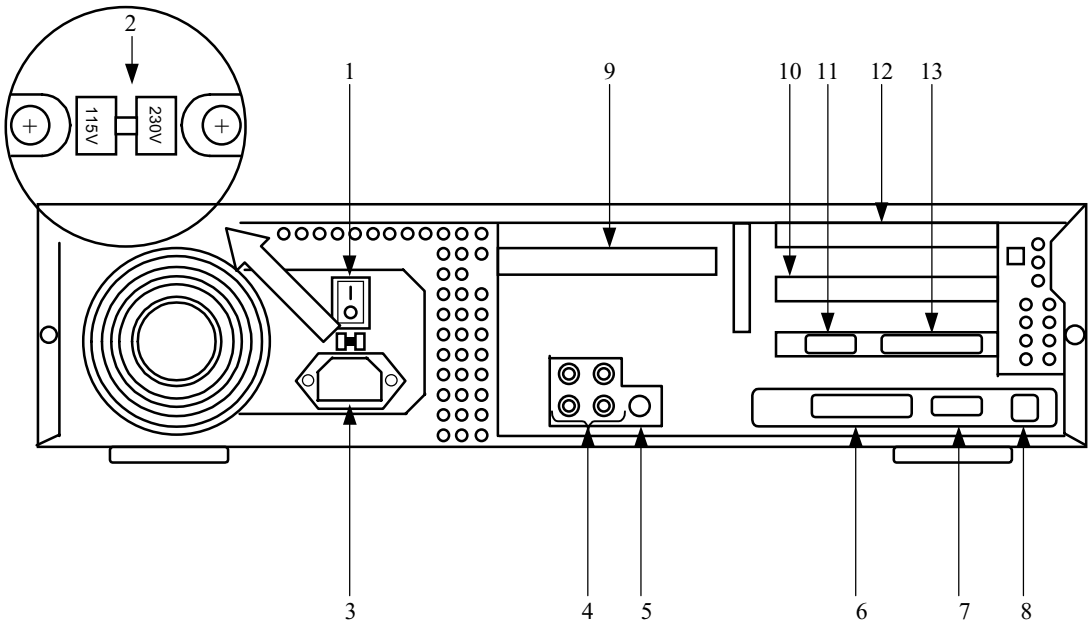

1: Power Switch

2: PS voltage selector (115V/230V)

3: Input connector of AC

4: AUDIO Port

5. Keyboard

6: Serial Port A

7: Graphic monitor

8: Ethernet (10/100 BaseT)

9: PCI2 (2’nd Ethernet card)

10: PCI1 CHBUS I/F

11: Serial Port B

12: PCI3 Option I/F (MRA 4 BUS I/F card etc.)

13: Parallel port

Figure 2-4 Ultra 5 Panel (REAR)

LIST OF MANUALS OF PERIPHERAL UNITS

Name of unit	AT type name	Type name	Title of manual
4 GB cartridge MT equipment	H3-6616B	4.0GB 1/4-Inch Tape Drive	• SPARC storage UniPack User's Guide(802-3228) • 4.0GByte 1/4-Inch Tape Driver Specification (805-2449)
Graphic monitor	——	Color Monitor	• 17-Inch Color Monitor CDT1780A • 21-Inch Color Monitor CDT2128

2.2 Recovery From Fatal Test System Errors

Figure 2-5 shows the sequence to follow between the occurrence of a fatal test system error and powering-off.

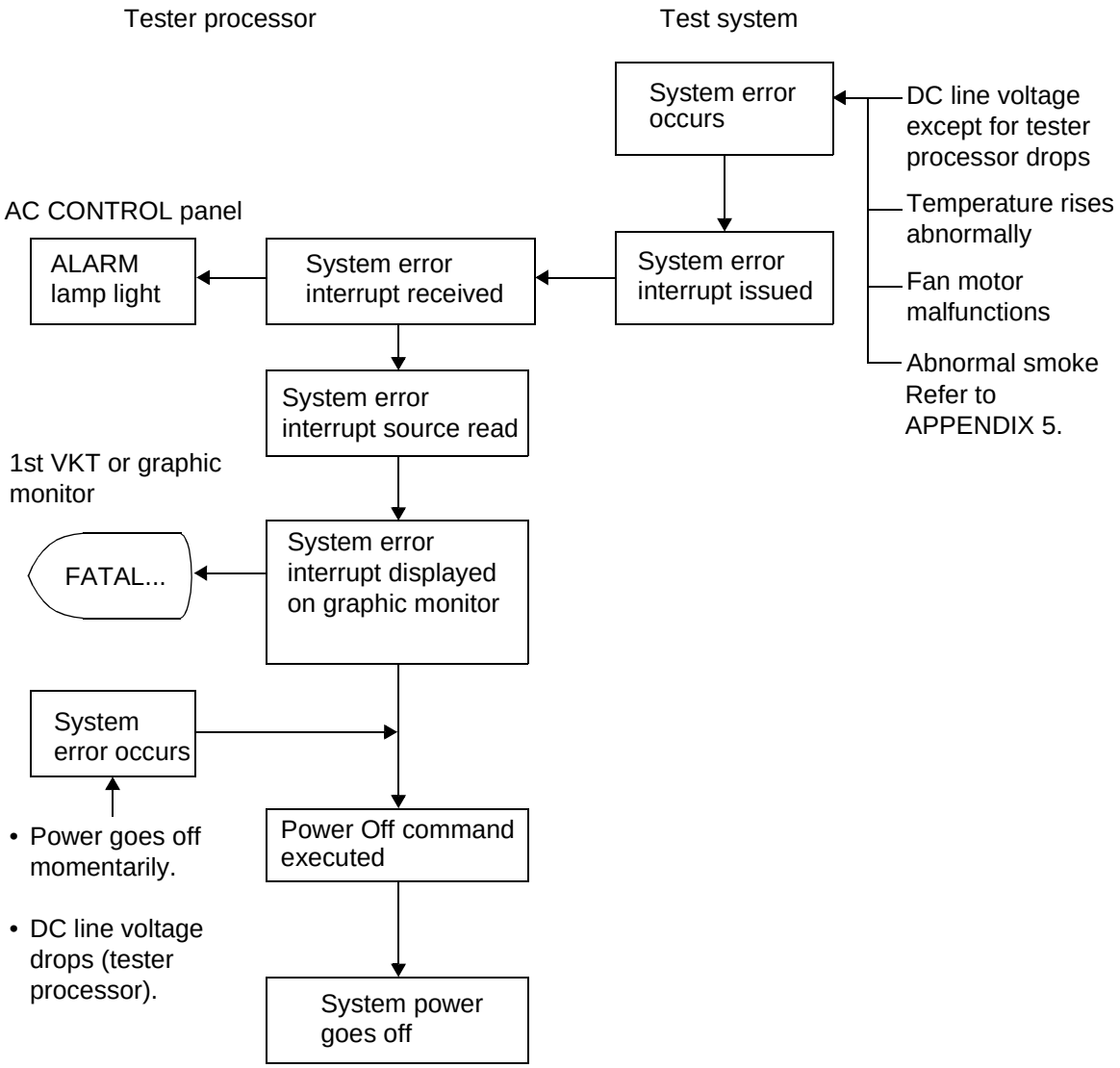

Figure 2-5 Sequence of Events When System Error Occurs

Figure 2-6 shows the procedure for analyzing a fatal test system error.

```
FATAL TEST SYSTEM ERROR!!
INTERRUPTED FROM [XXXXXX XX]
                  ①    ②
```

① System error interrupt source (Failed unit code)
② System error interrupt issuing unit code (Failed unit code)
} See Table 2-2.

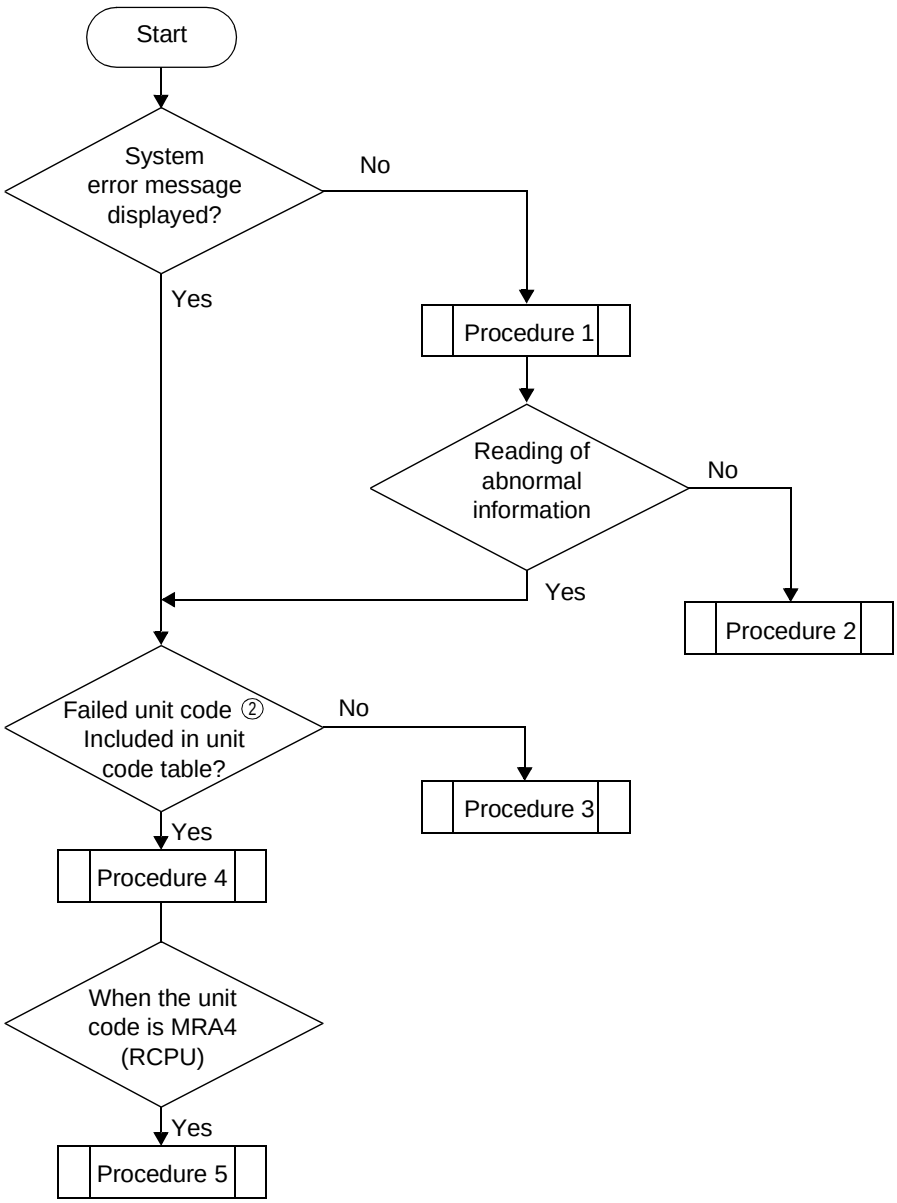

Figure 2-6 Procedure for Analyzing Fatal Test System Error

[Procedure 1] In the test system installing TP5 as the tester processor, messages are output to the EWS console screen and the /var/adm/messages file.

(Example 1)

```
WARNING: TP5: CODE   000115 BSAD 00000000 CALA 00007FD2 PSW  00000801
WARNING: TP5: AC0: 00000000 AC1: 00000000 AC2: XXXXXXXX AC3: 00000000
WARNING: TP5: AC4: 00000000 AC5: 00000000 AC6: 00000000 AC7: 00000000
```

CODE 115 shows an occurrence of a system abnormality interrupt.
If occurs, the factor of the system abnormality interrupt and the unit code is stored to AC2.
Take procedure 3 or 4 with referring to the unit code table.

(Example 2)

```
WARNING: TP5: CODE   000116 BSAD 00000000 CALA 00007FD2 PSW  00000801
WARNING: TP5: AC0: 00000000 AC1: 00000000 AC2: 00000000 AC3: 00000000
WARNING: TP5: AC4: 00000000 AC5: 00000000 AC6: 00000000 AC7: 00000000
```

CODE 116 shows an occurrence of a tester processor abnormality interrupt.
This CODE is displayed in the following case.

1. When an AC power failure was detected.
   When an occurrence of the abnormality on the tester processor and its cabinet was detected. (Refer to procedure 2.)

2. When the power of the test system is turned off while the RUN lamp (blue) of the AC control panel is on.
   Before turning off the test system, be sure that the RUN lamp is turned off by pressing the STOP button.

3. When an abnormality such as CODE 115 occurred and a message of CODE 116 was displayed in the process of turning off of the system power.
   In this case, take procedure 3 or 4 according to the first-displayed message of CODE 115.

The date and time where the CODE occurred are stored in the /var/adm/messages file.
By referring to this file, it is checked that different-coded abnormalities arose or did not arise at the same time. However, other messages output to the EWS console are also stored in this file. Refer only the message beginning with WARNING: TP5:.

[Procedure 2] The cause is a momentary AC input power failure or drop in the DC voltage supplied to the tester processor.
Check the DC power supply voltage to the tester processor and the 200VAC supplied to the test system.

[Procedure 3] Re-apply the power, and check the LEDs at the top of the board in the unit.
For the functions of each LED, see Figure 2-7.

[Procedure 4] In the data (hexadecimal) output as system error interrupt factor, the current system interrupt factor is indicated with 1. Collating the interrupt factor with the unit code in Figure 2-2 allows identification of the cause of the system error.

[Procedure 5] The following message is displayed on the EWS console and also output to the /var/adm/messages file.

Example message displayed on the EXS screen

```
%
WARNING: MRA4: RCPU unit status slot=0x10000<McpuSlot>, mcpu=0xf<portA,portB,portC,
portD>,rcpu A=0x0,B=0x0 C=0x0 D=0x0
WARNING: MRA4: RCPU unit off.
```

Check to see the location that fails to work, referring to RCPU UNIT board layout and WARNING: MRA4: Message Descriptions.

When the test system power is shut down with the RCPU running, this message may appear.

In this case, check the unit code first according to Figure 2-6, Procedure for Analyzing Fatal Test System Error.

RCPU UNIT boards layout

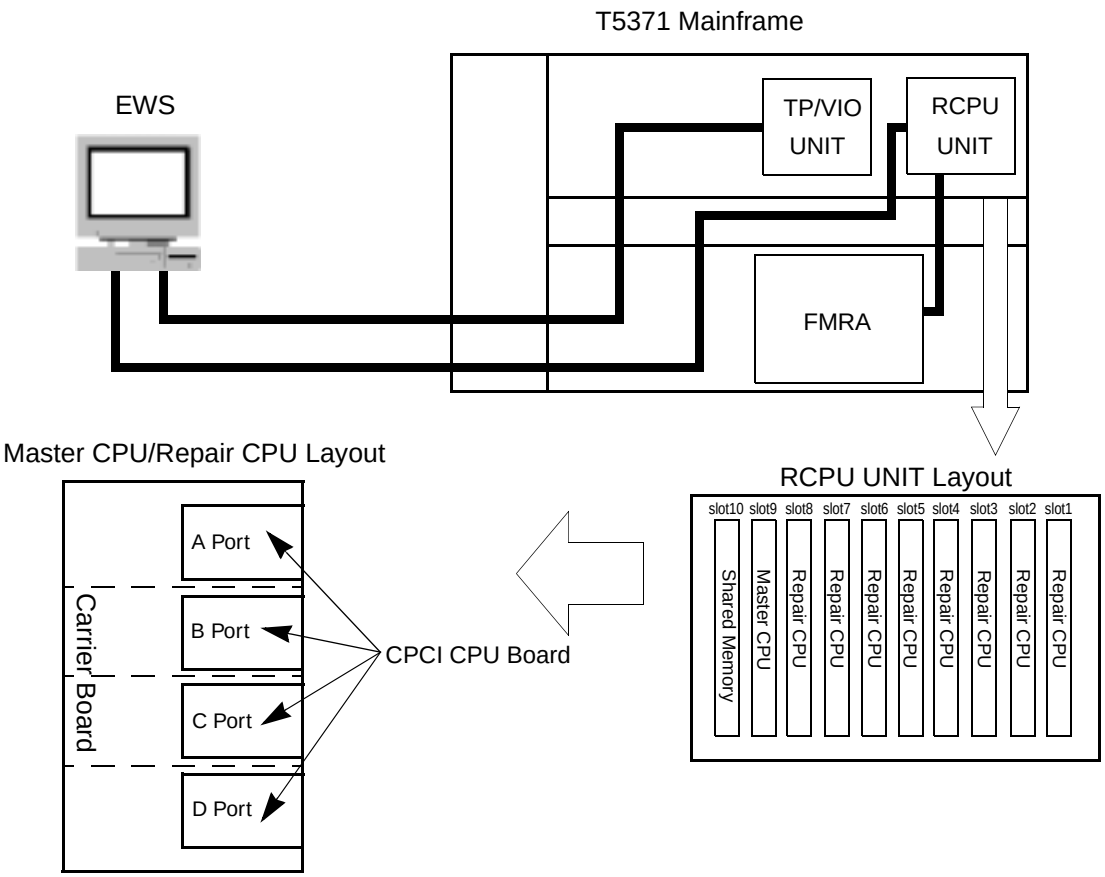

- WARNING: MRA4: Message descriptions

```
WARNING: MRA4: RCPU unit status slot=0xA<B>, mcpu=0xC<D>,rcpu A=0xE<F> B=0xG<H>
C=0xI<J> D=0xK<L>
WARNING: MRA4: RCPU unit off.
```

A: Slot number of the board where a power failure occurred
This is shown in hexadecimal notation.

B: Slot name of the board where a power failure occurred
Slot Name: McpuSlot, S1, S2, ..., S8

C: Port number of the MasterCPU board where a power failure occurred.
This is shown in hexadecimal notation.

D: Port name of the MasterCPU board where a power failure occurred.
Port Name: Port A, Port B, Port C, Port D

E: Slot number of the RepairCPU board where the Port A power failure occurred. This is shown in hexadecimal notation.

F: Slot name of the RepairCPU board where the Port A power failure occurred.
Slot Name: S1, S2, ..., S8

G: Slot number of the RepairCPU board where the Port B power failure occurred. This is shown in hexadecimal notation.

H: Slot name of the RepairCPU board where the Port B power failure occurred.
Slot Name: S1, S2, ..., S8

I: Slot number of the RepairCPU board where the Port C power failure occurred. This is shown in hexadecimal notation.

J: Slot name of the RepairCPU board where the Port C power failure occurred.
Slot Name: S1, S2, ..., S8

K: Slot number of the RepairCPU board where the Port D power failure occurred. This is shown in hexadecimal notation.

L: Slot name of the RepairCPU board where the Port D power failure occurred.
Slot Name: S1, S2, ..., S8

Example 1 A power failure has been detected at Ports A, B, C and D of the MasterCPU board.

```
WARNING: MRA4: RCPU unit status slot=0x10000<McpuSlot>, mcpu=0xf<portA,portB,portC,
portD>,rcpu A=0x0 B=0x0 C=0x0 D=0x0
WARNING: MRA4: RCPU unit off.
```

Example 2 A power failure has been detected at Port D of the RepairCPU board installed at Slot 8.

```
WARNING: MRA4: RCPU unit status slot=0x80<S8>, mcpu=0x0,rcpu A=0x0 B=0x0 C=0x0
D=0x80<S8>
WARNING: MRA4: RCPU unit off.
```

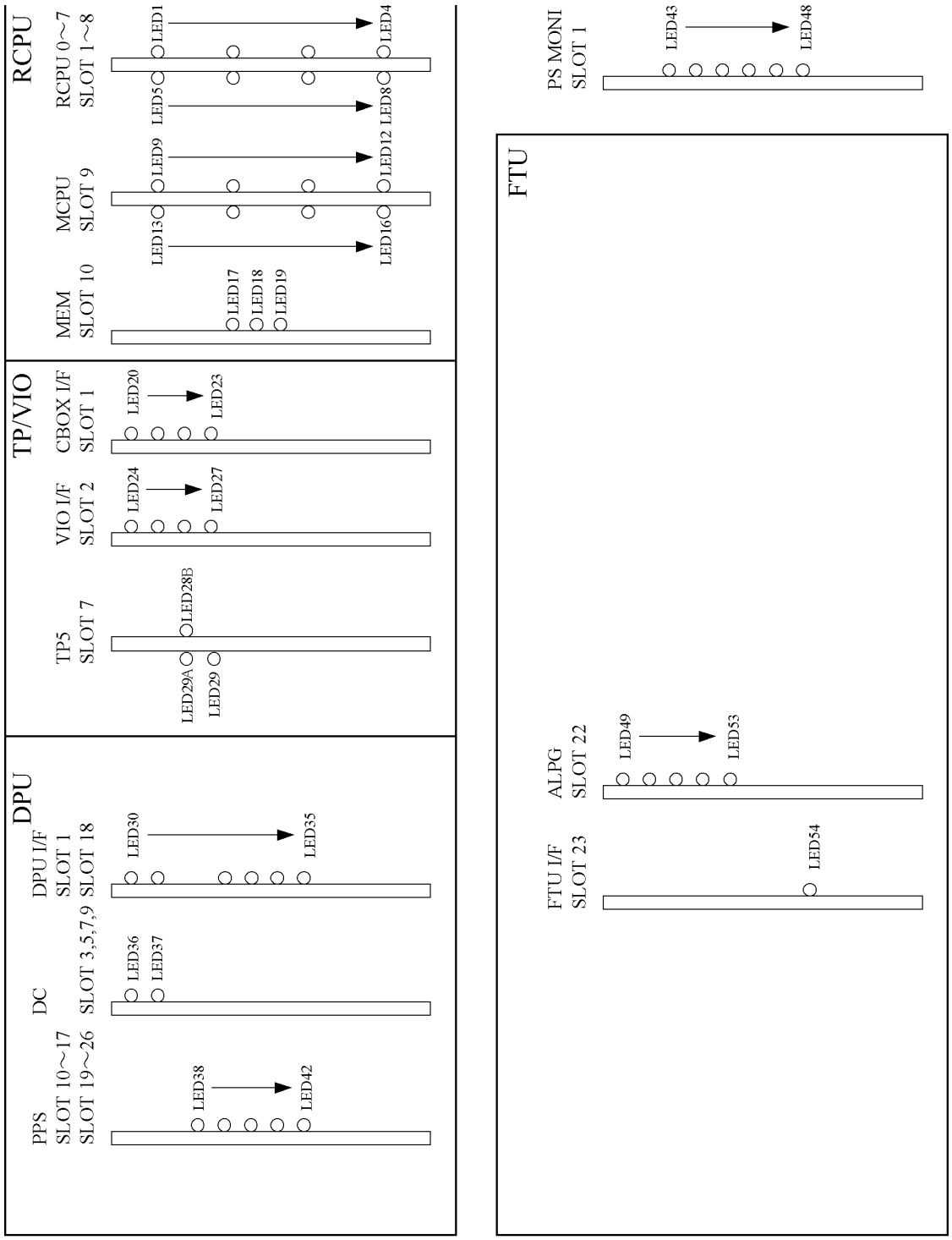

Figure 2-7 Board Top LED (1/5)

Unit name	Slot No. Circuit name	LED No.	Color	Normal state	The condition of LED lighting
RCPU	SLOT1 to 8	1	Green	ON	Port A POWER ON START diagnosis is passed. Flushes under abnormal conditions.
	RCPU0 to 7	2	Green	ON	Port B POWER ON START diagnosis is passed. Flushes under abnormal conditions.
		3	Green	ON	Port C POWER ON START diagnosis is passed. Flushes under abnormal conditions.
		4	Green	ON	Port D POWER ON START diagnosis is passed. Flushes under abnormal conditions.
		5	Green	ON	Port A power supply is normal. Lit in red under abnormal conditions.
		6	Green	ON	Port B power supply is normal. Lit in red under abnormal conditions.
		7	Green	ON	Port C power supply is normal. Lit in red under abnormal conditions.
		8	Green	ON	Port D power supply is normal. Lit in red under abnormal conditions.
	SLOT9	9	Green	ON	Port A POWER ON START diagnosis is passed. Flushes under abnormal conditions.
	MCPU	10	Green	ON	Port B POWER ON START diagnosis is passed. Flushes under abnormal conditions.
		11	Green	ON	Port C POWER ON START diagnosis is passed. Flushes under abnormal conditions.
		12	Green	ON	Port D POWER ON START diagnosis is passed. Flushes under abnormal conditions.
		13	Green	ON	Port A power supply is normal. Lit in red under abnormal conditions.
		14	Green	ON	Port B power supply is normal. Lit in red under abnormal conditions.
		15	Green	ON	Port C power supply is normal. Lit in red under abnormal conditions.
		16	Green	ON	Port D power supply is normal. Lit in red under abnormal conditions.
	SLOT10	17	Green	ON	+5.0V power supply is normal.
	MEM	18	Red	OFF	INT0 is being generated.
		19	Yellow	OFF	INT1 is being generated.
TP/VIO	SLOT1	20	Green	ON	+5.0V power supply is normal.
	CBOX I/F	21	Green	ON	+5.2V power supply is normal.
		22	Green	ON	+5.0V power supply is normal. (Power supply to HANDLER)
		23	Red	OFF	INT0 is being genarated.
	SLOT2	24	Red	OFF	TH (STATION1) power supply, temperature and fan status are abnormal.
	VIO I/F	25	Red	OFF	TH (STATION2) power supply, temperature and fan status are abnormal.
		26	Green	ON	+5.0V power supply is normal.
		27	Green	ON	-5.2V power supply is normal.
	SLOT7	28A	Green	ON	Power supply is normal. Lit in red at the reset active.
		28B	Red	OFF	Lit in red when the system has started abnormally.
	TP5	29	Green	ON	Lit after the system has started normally.

Figure 2-7 Board Top LED (2/5)

Unit name	Slot No. Circuit name	LED No.	Color	Normal state	The condition of LED lighting
DPU	SLOT1,18	30	Green	—	At DPU 2'd 4'th UNIT
	DPU I/F	31	Green	—	At DPU 3'd 4'th UNIT
		32	Yellow	OFF	INT1 is being generated.
		33	Red	OFF	INT0 is being generated.
		34	Green	ON	+5.0V power supply is normal.
		35	Green	ON	-5.2V power supply is normal.
	SLOT3,5,7,9	36	Yellow	OFF	CLAMP ALARM of DC is being generated.
	DC	37	Yellow	OFF	GUARD ALARM of DC is being generated.
	SLOT10 to 17	38	Yellow	OFF	CLAMP ALARM of PPS is being generated.
	SLOT19 to 26	39	Yellow	OFF	GUARD ALARM of PPS is being generated.
	PPS	40	Yellow	OFF	Abnormal voltage (High) of PPS is being output.
		41	Yellow	OFF	Abnormal voltage (Low) of PPS is being output.
		42	Red	OFF	Kelvin ALARM of PPS is being generated.
PS MONITOR	SLOT1	43	Green	ON	+5.0V power supply is normal
	PS MONI I/F	44	Green	ON	-5.2V power supply is normal
		45	Red	OFF	Smoke detected is abnormal.
		46	Red	OFF	Fan status is abnormal.
		47	Red	OFF	Temperature status is abnormal.
		48	Red	OFF	INT0 in being generated.
FTU	SLOT22	49	Orange	—	TGRUN TG power supply is normal.
	ALPG	50	Orange	—	PGBUSY PG power supply is normal.
		51	Green	ON	LSI -3.3V power supply is normal.
		52	Green	ON	LSI -3.3V power supply is normal.
		53	Green	ON	LSI -3.3V power supply is normal.
	SLOT23	54	Green	ON	+5.0V power supply is normal.
	FTU I/F				

Figure 2-7 Board Top LED (3/5)

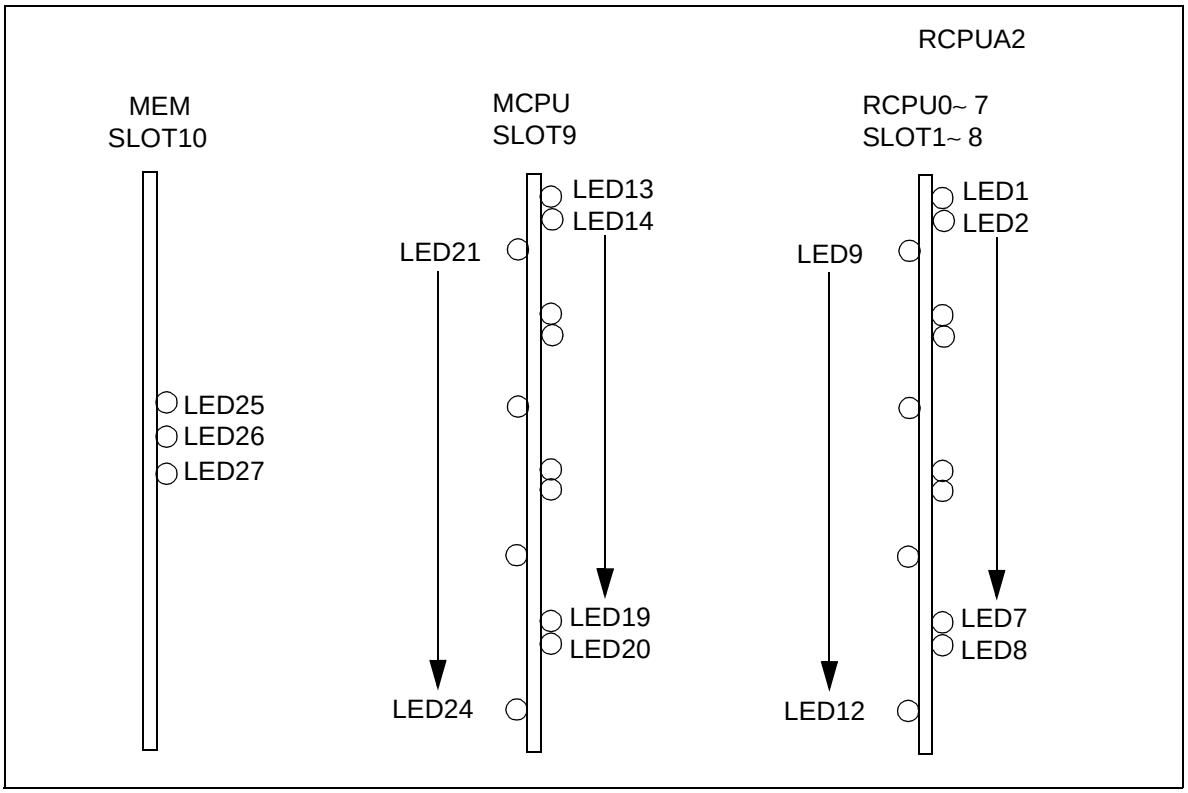

Figure 2-7 Board Top LED (4/5)

Unit name	Slot No. Circuit name	LED No.	Color	Normal state	The condition of LED lighting
RCPUA2	SLOT1~ 8	1	Orange	OFF	Lit the reset active or under abnomal condition.
	RCPU0~ 7	2	Green	OFF	Lit the reset active.
		3	Orange	OFF	Lit the reset active or under abnomal condition.
		4	Green	OFF	Lit the reset active.
		5	Orange	OFF	Lit the reset active or under abnomal condition.
		6	Green	OFF	Lit the reset active.
		7	Orange	OFF	Lit the reset active or under abnomal condition.
		8	Green	OFF	Lit the reset active.
		9	Green	ON	Port A POWER ON START diagmosis is passed.
		10	Green	ON	Port B POWER ON START diagmosis is passed.
		11	Green	ON	Port C POWER ON START diagmosis is passed.
		12	Green	ON	Port D POWER ON START diagmosis is passed.
	SLOT9	13	Orange	OFF	Lit the reset active or under abnomal condition.
	MCPU	14	Green	OFF	Lit the reset active.
		15	Orange	OFF	Lit the reset active or under abnomal condition.
		16	Green	OFF	Lit the reset active.
		17	Orange	OFF	Lit the reset active or under abnomal condition.
		18	Green	OFF	Lit the reset active.
		19	Orange	OFF	Lit the reset active or under abnomal condition.
		20	Green	OFF	Lit the reset active.
		21	Green	ON	Port A POWER ON START diagmosis is passed.
		22	Green	ON	Port B POWER ON START diagmosis is passed.
		23	Green	ON	Port C POWER ON START diagmosis is passed.
		24	Green	ON	Port D POWER ON START diagmosis is passed.
	SLOT10	25	Green	ON	+5.0V power supply is normal.
	MEM	26	Red	OFF	INT0 is being generated.
		27	Yellow	OFF	INT1 is being generated.

Figure 2-7 Board Top LED (5/5)

Table 2-2 Interrupt Causes and Units (1/3)

Unit Code (hexadecimal)	Unit name
02	Control box (test station 1)
03	Control box (test station 2)
32	DPU (1st)
33	DPU (2nd)
51	Test station 1
52	Test station 2
1A	MRA4(RCPU)
F1 to F3	Voltage monitor I/F

Table 2-2 Interrupt Causes and Units (2/3)

- In addition to the test station 1, 2 and the control box, MRA4(RCPU)

31	30	29	28	27	26	25	24	23	22	21	20	19	18	17	16	15	14	13	12	11	10	9	8	7	6	5	4	3	2	1	0
MRA4 RCPU Fuse is blown	+10.5V abnormality	-7.5V abnormality	+3V abnormality	+18V abnormality	+16V abnormality	-9V abnormality	RL VC C abnormality	-2V abnormality	-6.5V abnormality	Smoke abnormality	-5.2V abnormality	-60V abnormality	+60V abnormality	-36V abnormality	+36V abnormality	-24V abnormality	+24V abnormality	-15V abnormality	+14V abnormality	-12V abnormality	+11.5V abnormality	+5V abnormality	Fan abnormality	Temperature abnormality	Unit Code						

- In addition to DPU

31	30	29	28	27	26	25	24	23	22	21	20	19	18	17	16	15	14	13	12	11	10	9	8	7	6	5	4	3	2	1	0
Heat sink alarm (DC)	Heat sink alarm (PPS)																							Unit Code							

Table 2-2 Interrupt Causes and Units (3/3)

31	30	29	28	27	26	25	24	23	22	21	20	19	18	17	16	15	14	13	12	11	10	9	8	7	6	5	4	3	2	1	0
																								Unit code							
			+36Vabnormality (CBOX)	+24Vabnormality (TH2)	+24Vabnormality (TH1)		+12V abnormality (TPVIO)	+5.0Vabnormality (RCPU)	+5.0V abnormality(TPVIO)	+5.0Vabnormality (FTU)	+3.3Vabnormality (RCPU)		-12Vabnormality (TPVIO)	-5.2Vabnormality (TPVIO)	-5.2Vabnormality (FTU2)	-5.2Vabnormality (FTU1)	-3.3Vabnormality (FTU2)	-3.3Vabnormality (FTU1)	-3.3Vabnormality (FTU2)	-3.3Vabnormality (FTU1)		-2.0Vabnormality (TPVIO)	-2.0Vabnormality (FTU)	1	1	1	1	0	0	0	1
				+23Vabnormality (DPU)	+20Vabnormality (DPU)	+20Vabnormality (DPU)	+15Vabnormality (DPU)	+11Vabnormality (DPU)	+11Vabnormality (DPU)	+5.0Vabnormality (DPU)	+3.3Vabnormality (DPU)	+3.3Vabnormality (DPU)			-5.2Vabnormality (DPU)	-10Vabnormality (DPU)	-10Vabnormality (DPU)	-10Vabnormality (DPU)	-12Vabnormality (DPU)	-15Vabnormality (DPU)				1	1	1	1	0	0	1	0
SMOKE	FAN (Note)	TEMP																						1	1	1	1	0	0	1	1

Note: ***Abnormal conditions in a fan can be detected and displayed. The opposite phase applied for a three-phase fan can be detected and displayed when the transformer unit code is KH3-71383.***

2.3 TP Unit Auto Diagnosis Program

(1) Immediately after the tester is turned on, the TP unit auto-diagnosis program is loaded to the main memory from the TP unit, and the auto-diagnosis program is executed.

The TP SDIAG LEDs on the AC control panel are used to display the TP unit auto-diagnostics results. As each diagnostic test is performed, the LED display changes as shown in Table 2-3. If all LEDs are off, the TP unit auto-diagnosis program has been completed successfully. If one of auto-diagnostic tests fails, the test will be performed one more time, and if it fails again, the LED display shows the last successfully completed test.

Table 2-3 TP Unit Auto Diagnosis Program

TP SDIAG MSB LED LSB	Diagnosis
● ● ● ● ●	Power On.
● ● ● ● ○	JMPS is operated normally.
● ● ● ○ ●	MOV is operated normally.
● ● ● ○ ○	ADSI is operated normally.
● ● ○ ● ●	ANFI is operated normally.
● ● ○ ● ○	LD is operated normally.
● ● ○ ○ ●	ADF is operated normally.
● ● ○ ○ ○	ST is operated normally.
● ○ ● ● ●	SBT is operated normally.
● ○ ● ● ○	INCM is operated normally.
● ○ ● ○ ●	LLS is operated normally.
● ○ ● ○ ○	LRS is operated normally.
● ○ ○ ● ●	BTO is operated normally.
● ○ ○ ● ○	MVF is operated normally.
● ○ ○ ○ ●	MVB is operated normally.
● ○ ○ ○ ○	FLTA is operated normally.
○ ● ● ● ●	FIXA is operated normally.
○ ● ● ● ○	FMOV is operated normally.
○ ● ● ○ ●	FAD is operated normally.
○ ● ● ○ ○	TRAP is operated normally. (TRAP is not performed in TRAP ENABLE.)
○ ● ○ ● ●	TRAP is operated normally. (TRAP is performed in TRAP DISABLE.)
○ ● ○ ● ○	Timer data is cleared by IORST. (DIA ac, 3D test)
○ ● ○ ○ ●	Timer mask data is cleared by IORST. (DIA ac, 3D test)
○ ● ○ ○ ○	Timer range data is cleared by IORST. (DIC ac, 3D test)
○ ○ ● ● ●	Timer data is read normally. (DOA ac, 3D DOA ac, 3D test)
○ ○ ● ● ○	Data channel status is read normally. (DOA ac, 3E DIA ac, 3E test)
○ ○ ● ○ ●	ADC counter(address counter) is added 1 with DOB ac, 3E.
○ ○ ● ○ ○	ADC address is not added 1 with DOD ac, 3E.
○ ○ ○ ● ●	Data channel status is read normally. (DOD ac, 3E test.)
○ ○ ○ ● ○	ADC data is read normally. (DOB ac and 3E, DIB ac, 3E test.)
○ ○ ○ ○ ●	RDTBR is operated normally.
○ ○ ○ ○ ○	SDIAG is completed normally with PASS.

3 BOARD REPLACEMENT

CAUTION!
Only qualified persons who have taken the maintenance course at the Technical Training School may attempt the repairs described in this or the following chapters.

Be sure to turn off the system power before any board replacement activity.
Also, when replacing a board, use earth band surely.

If cables are connected to the top of a board, disconnect the cables before the board is mounted or removed.

When replacing the following board that delay time is provided by cable, the cable must also be replaced.

3.1 How to Open Main Unit Panels

(1) Ensure that the key of the Allen wrench exists on the upside and the downside of the cabinet panel.

(2) Insert the Allen wrench to the panel key, then turn it counterclockwise. Thereby the panel can be opened in front.

(3) Pull down hinge lever on the panel. Hinge shaft is lowered, then detached from hinge holder.

(4) Raise the panel and extract hinge shaft from hinge holder to completely remove the panel from the cabinet frame.

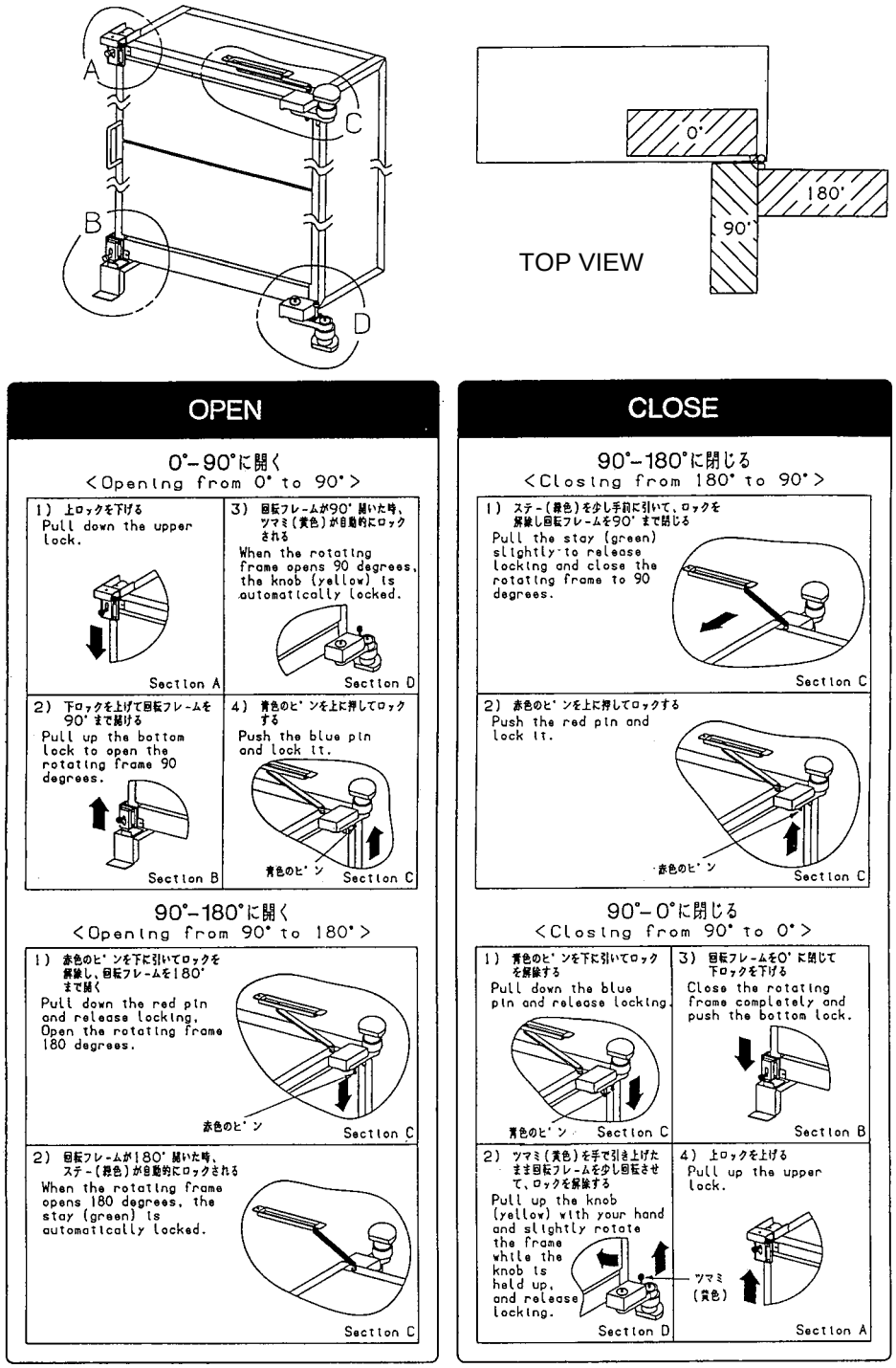

The above seal is affixed to the back of the cabinet door.
Refer to it when opening or closing the rotating frame.

Figure 3-1 Rotation Frame Opening Method

3.2 How to Connect/Disconnect Cables

Various connectors are installed on each board. Figure 3-2 through Figure 3-5 explain how to disconnect and connect these cables.

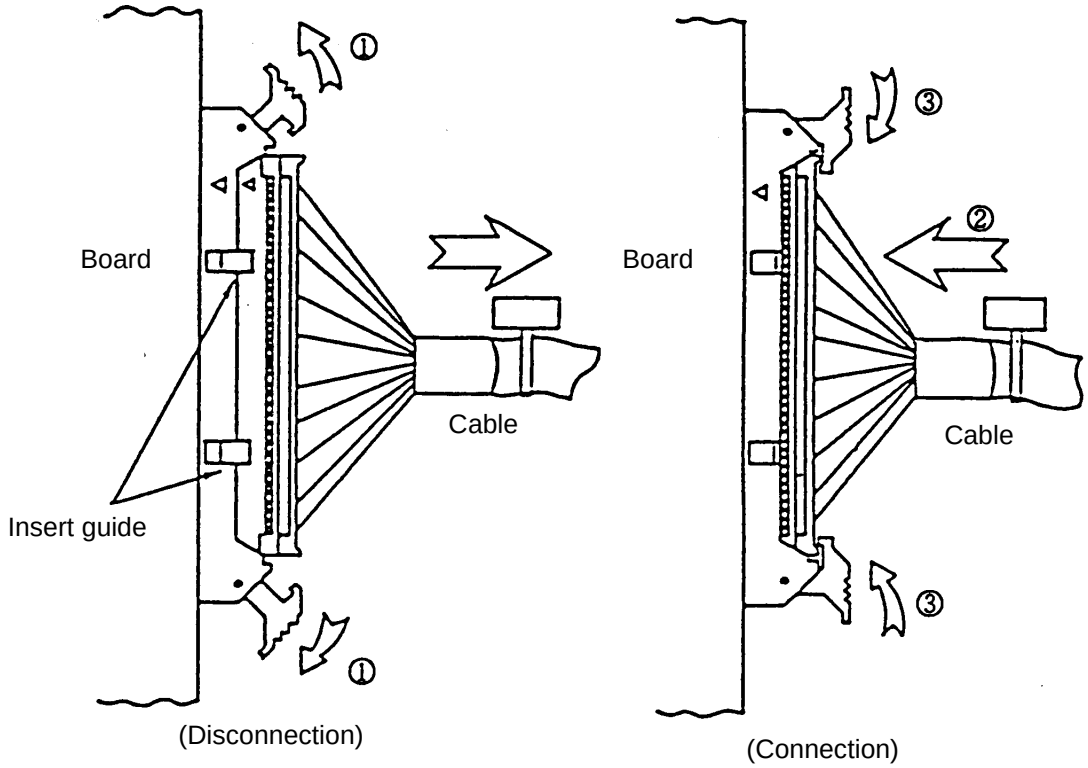

① Unlock two locks on top and bottom by using the fingers and pull the connector towards you.

② Place the insert guides on the correct positions and press in the connector.

③ Lock the two locks.

Figure 3-2 Connecting/Disconnecting Top Board Connector (I)

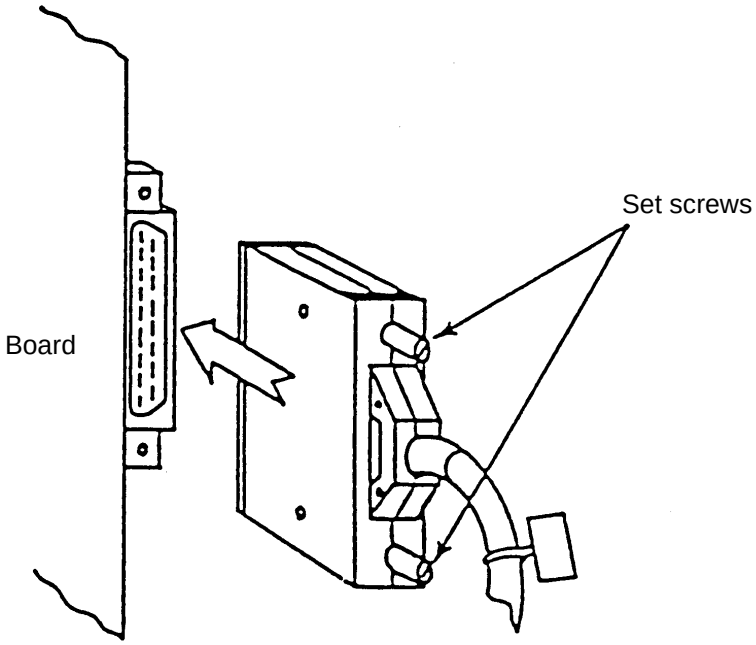

Figure 3-3 Connecting/Disconnecting Top Board Connector (II)

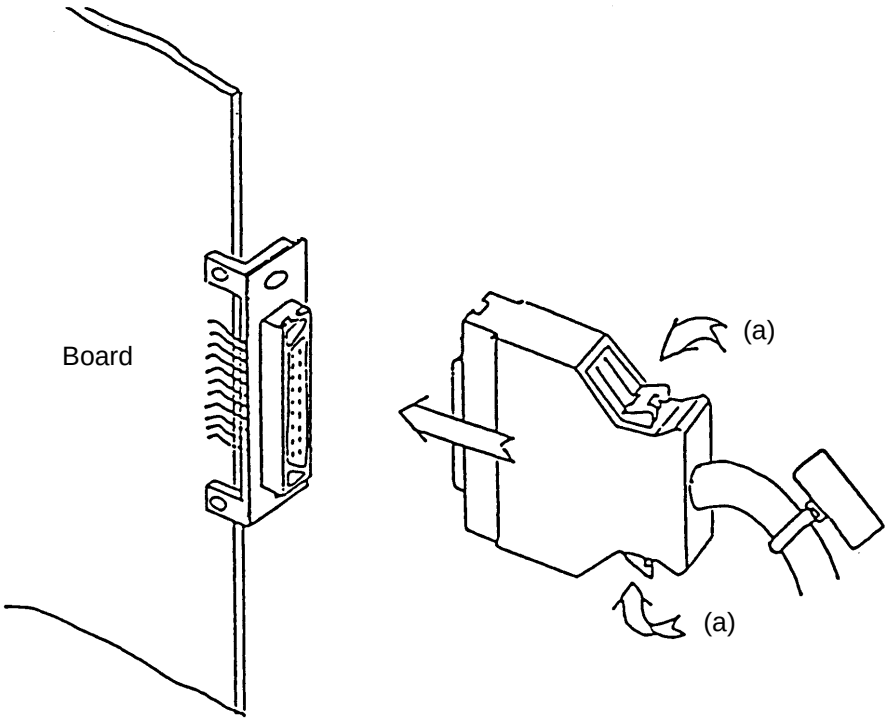

To disconnect, depress (a) and pull the connector in front.
To connect, press in the pin block until it clicks.

Figure 3-4 Connecting/Disconnecting Top Board Connector (III)

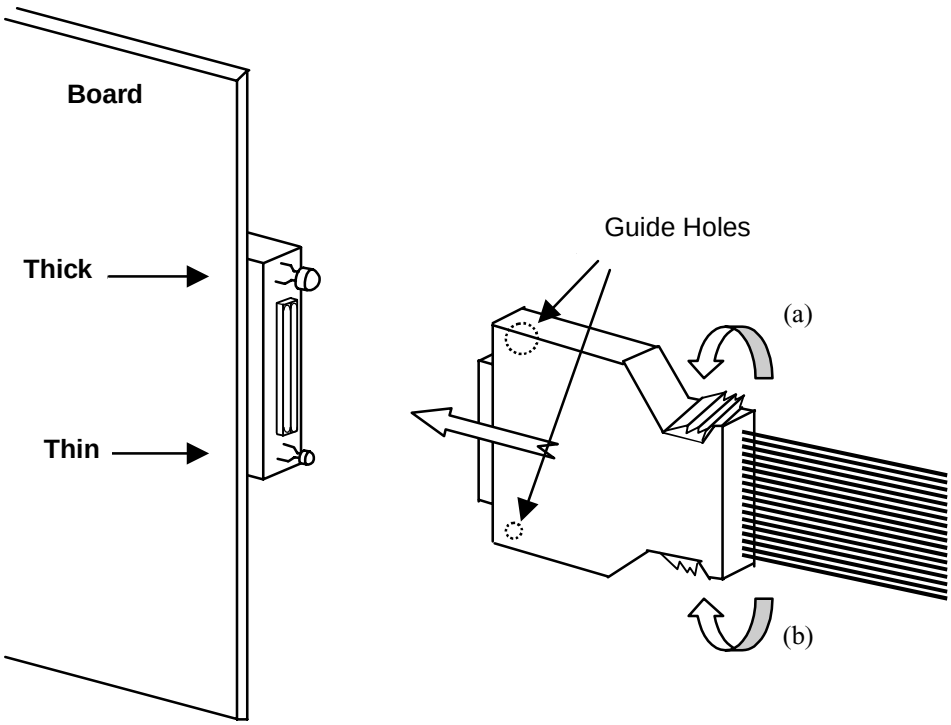

Pull the connector out pressing (a) and (b) simultaneously to remove it.
Make sure that the larger guide hole of the cable connector is in the upper position, and press the connector in until it clicks.

Figure 3-5 Connecting/Disconnecting Top Board Connector (IV)

3.3 Cable Markings

Each cable used in the tester section of the test system has a marking.

Each marking indicates where the connector is to be connected.

Figure 3-6 shows an example of a cable marking. In this example, the marking is “DPU S1 J6”, which indicates that the cable is to be connected to connector No. 6 on the board set at slot 1 of the DPU unit. TH2 cable has a red cable tie as distinguished from TH1 cable.

“FTU S26 J7 J13” indicates that the TH1 and TH2 cables are to be connected to J7 and J13 respectively on the board set at slot 26 of the FTU unit.

For unit names, slot numbers, and connector numbers, see the respective cable connection diagrams.

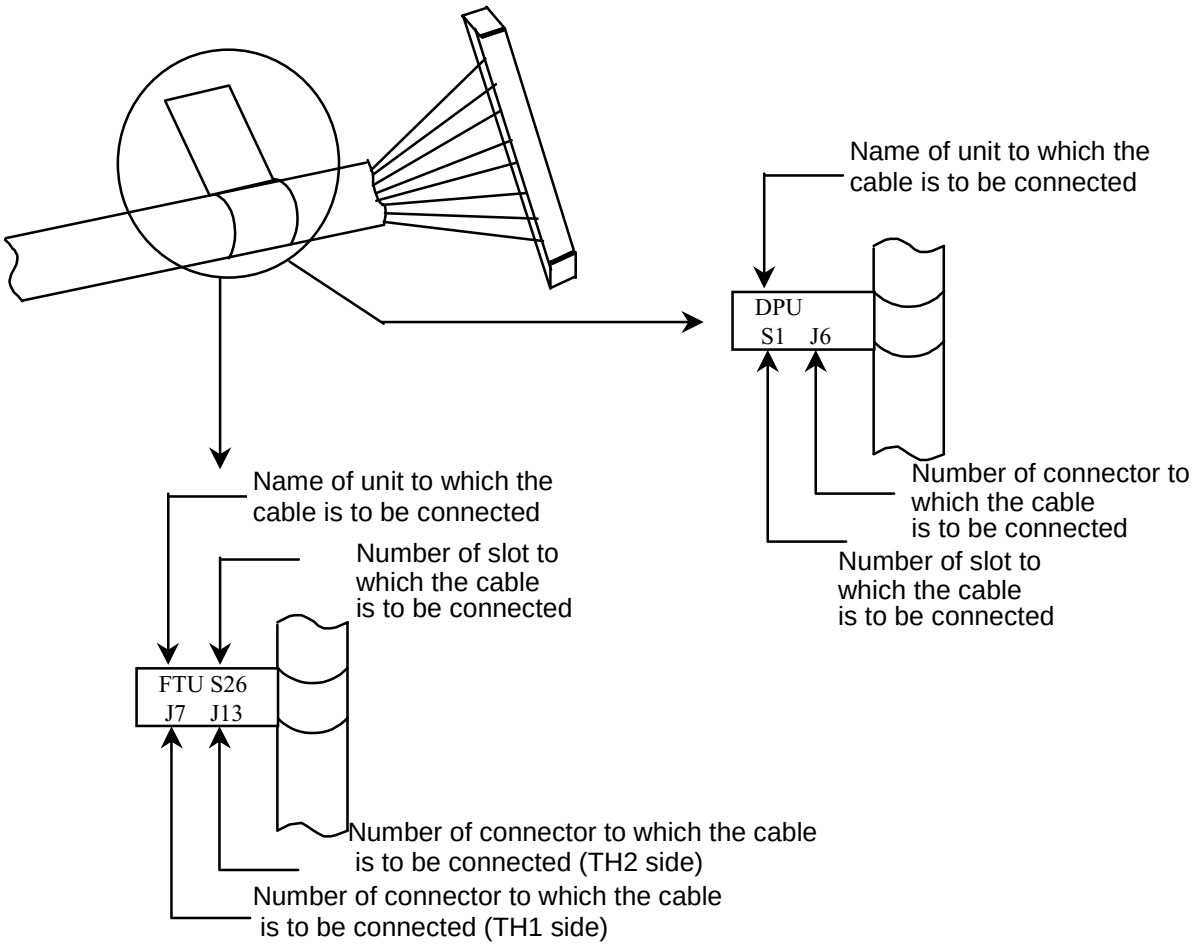

Figure 3-6 Example of Cable Marking

3.4 How to Insert and Extract Main Unit Boards

A board handle like the one shown in Figure 3-7 is installed in each of the upper and lower parts of the main unit. These board handles slide horizontally. Move each handle to the desired slot position, set the board handle at the protrusion of the board reinforcement bar, and insert or extract the board. To mount the board, insert it by hand so that the connector guide on the back board engages the connector guide on the board.

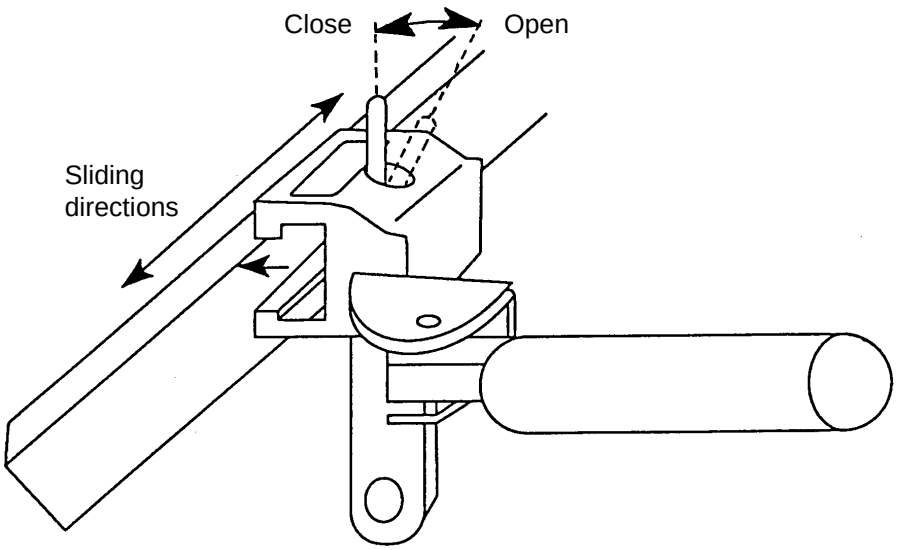

Figure 3-7 Board Handle

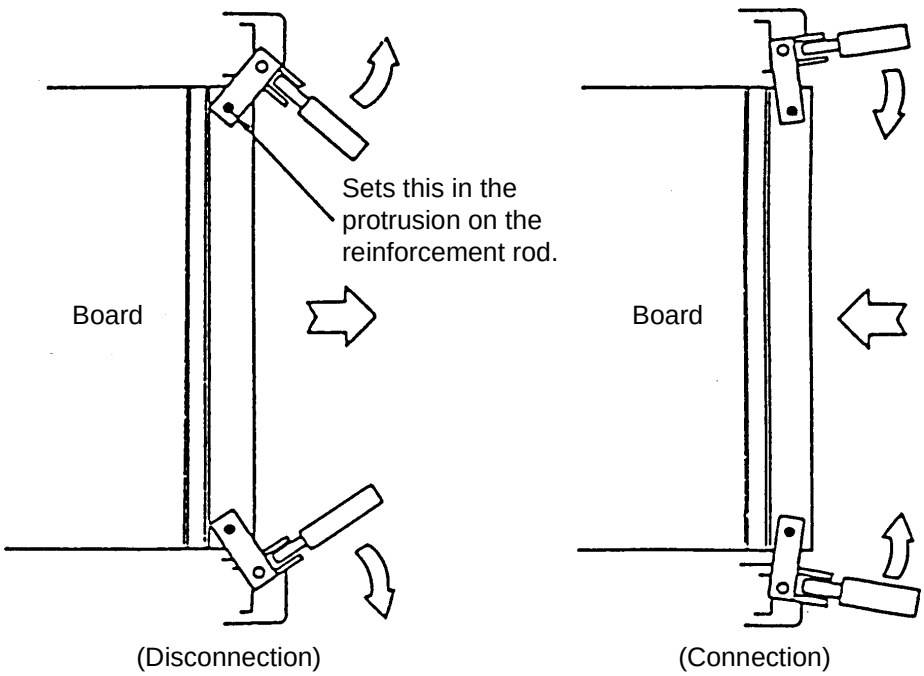

Figure 3-8 Board Insertion/Extraction

3.5 Installing and Removing the Test Head Installation Board

Use the specified drawing jig to remove the pin electronics (PE) card.

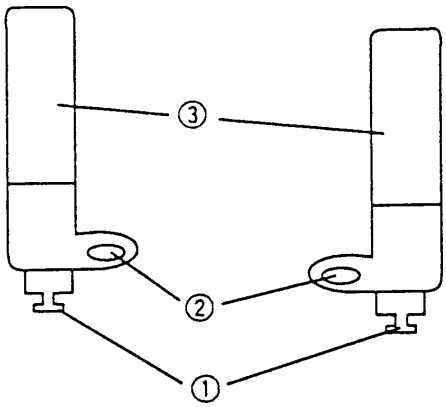

Figure 3-9 PE Card Drawing jig

To remove the PE card from the test head, set the ① of the drawing jig to the rail, hang the ② at the pin on the upper part of the PE card, grip the part indicated by ③ and pull the PE card outside.

To install the PE card, grip the part indicated by ③ and push it inside.

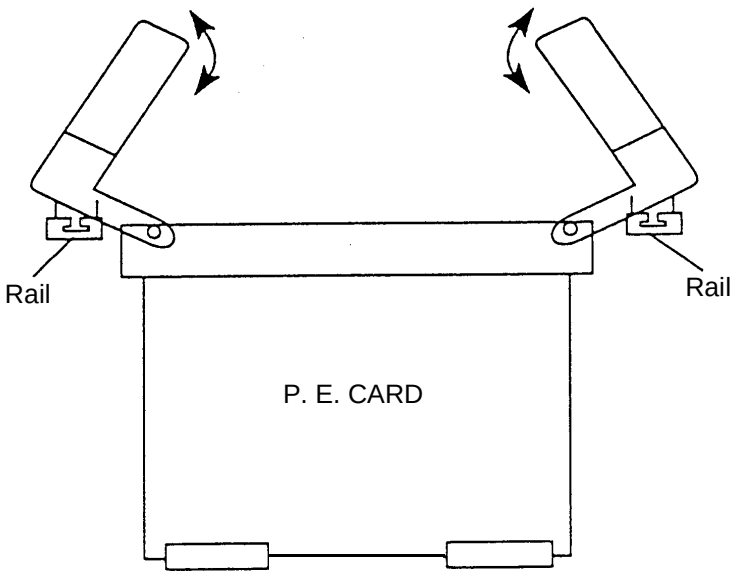

Figure 3-10 Removing the PE card

Exchanging Pin Electronics (PE) Card

(1) After setting the performance board (HIFIX) to free status, turn the system power OFF to remove the HIFIX from the TH.

(2) Remove the TH upper cover (armored unit)

(3) PE is divided into four blocks. Remove screws on both sides of the lock metal fittings of the object PE.

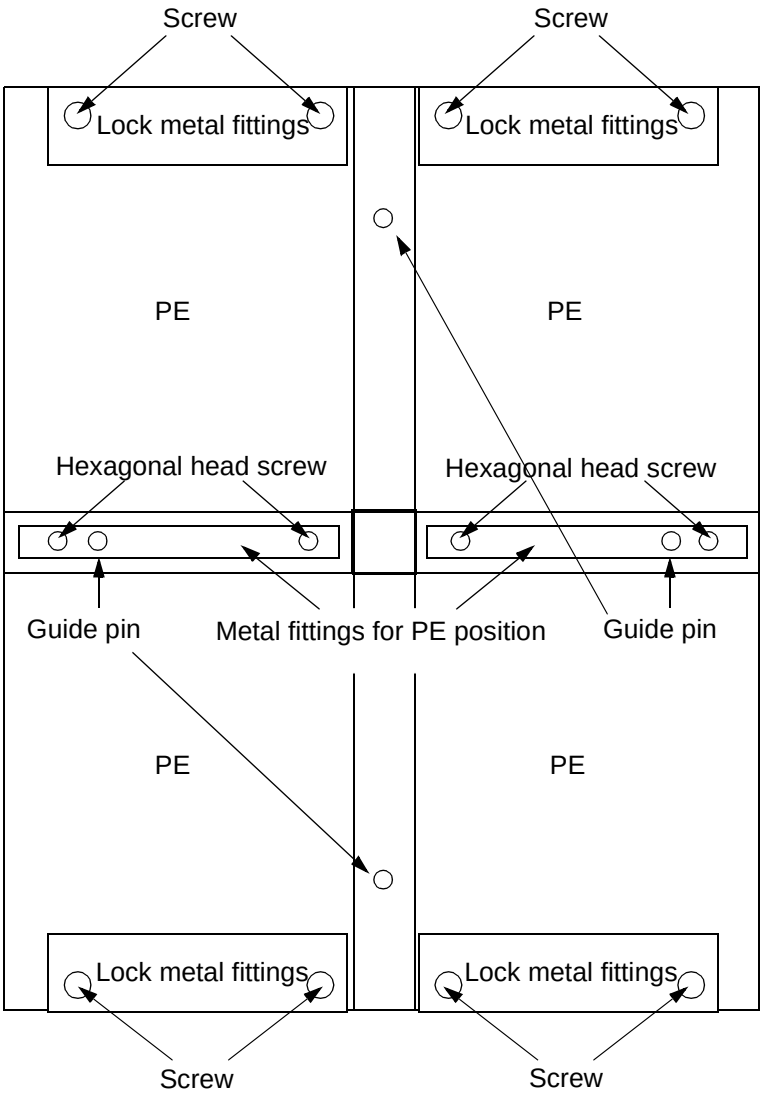

Figure 3-11 TH

(4) Lift up the lock metal fittings.

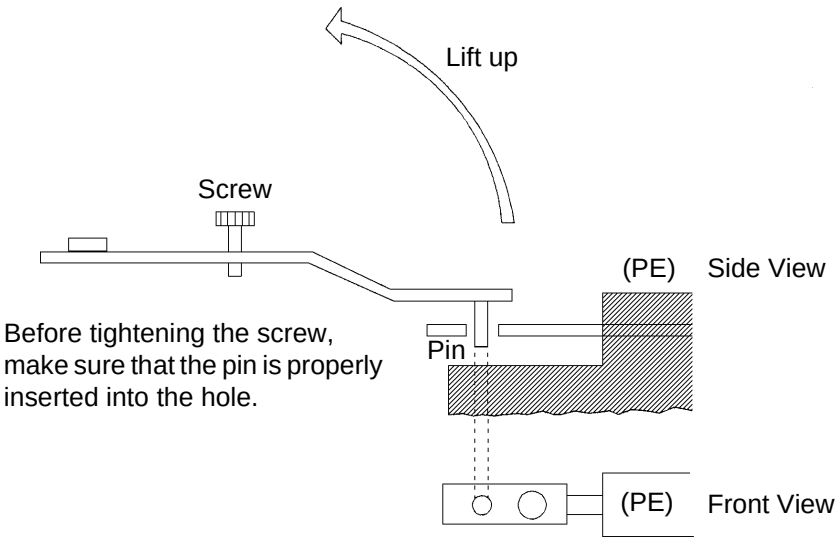

(5) Unscrew the hexagonal head screw of the PE positioning metal fittings shown in Figure 3-11 with a 5-mm Allen wrench.

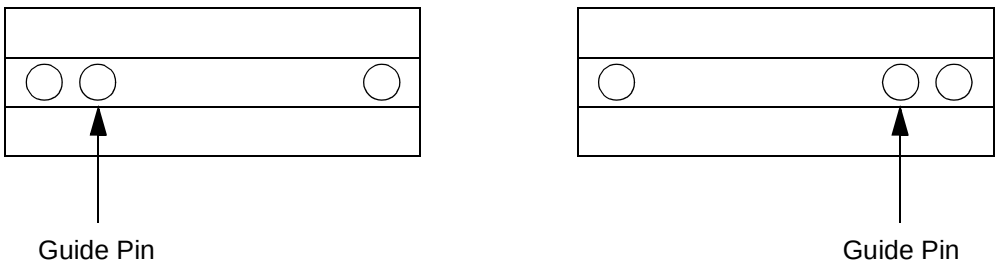

Figure 3-12 Metal Fittings for PE Position

(6) Pull out the PE card with the specified tool shown in Figure 3-9.

Note: ***Use the earth band for exchanging the PE.***

(7) For assembling it, conduct in the reversed turn of (3) to (6). Also, confirm that the PE is firmly set.

Note: Handling method of the pin electronics card

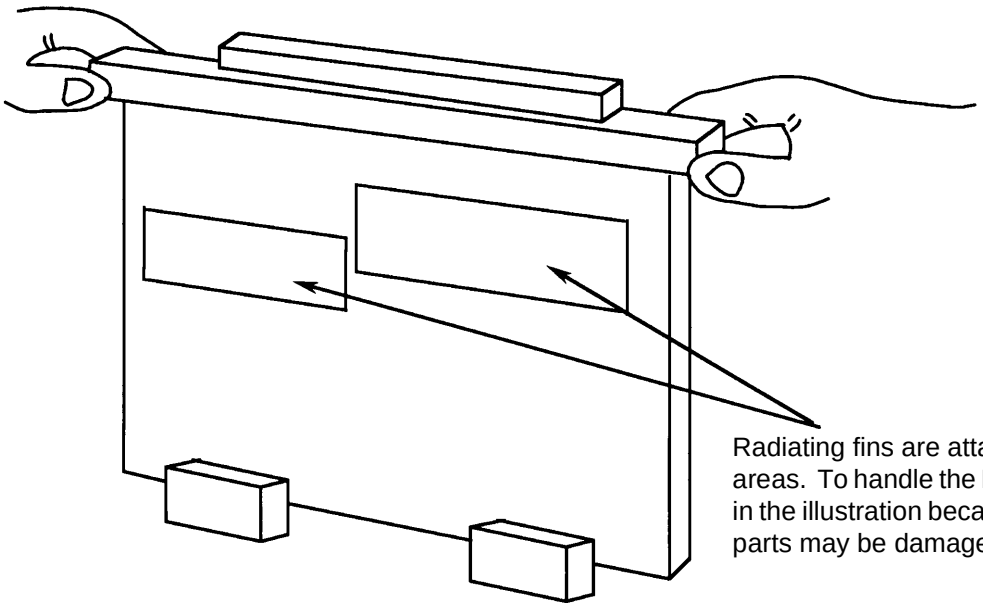

Radiating fins are attached on these areas. To handle the PE, hold it as shown in the illustration because the radiating fin parts may be damaged if you hold this.

3.6 Location of Board Name

The board names indicated in the positions shown in Figure 3-13.

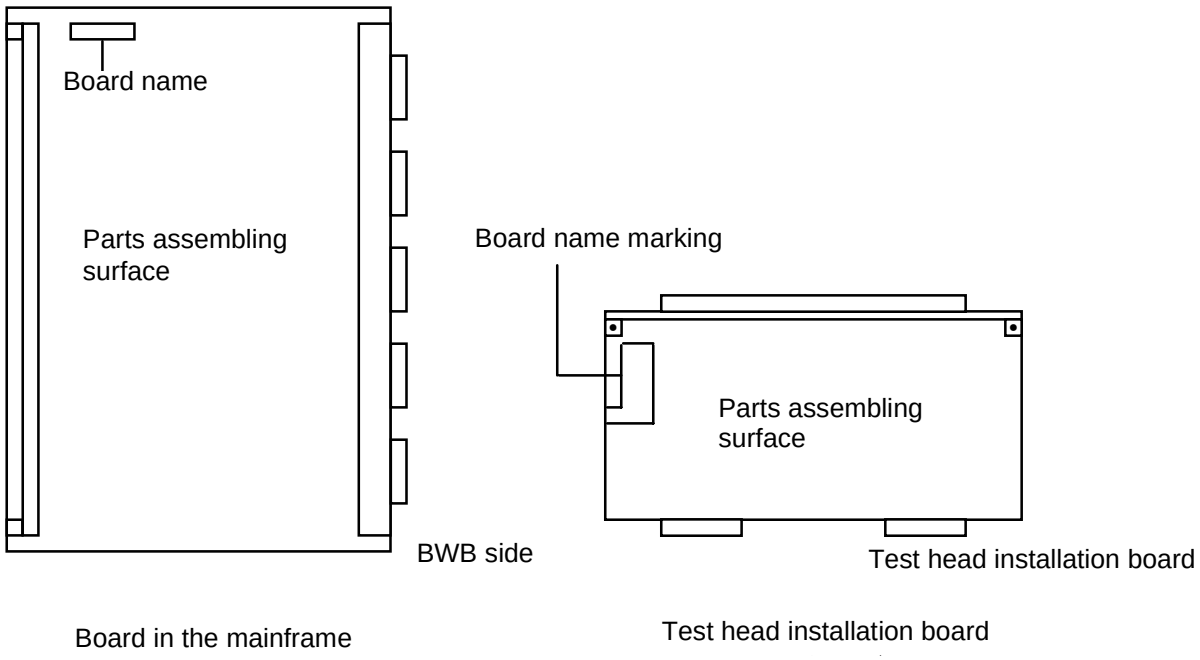

Figure 3-13 Location of Board Name

3.7 Precautions for Replacement with Spare Boards

3.7.1 Board Compatibility Version Check

The version of a board is marked with a three alphabetic characters.

Because of added functions or other improvements, each version of a board is an upgraded version of the previous version. The version reflects these revisions to board performance.

The version of each board is marked in the location shown in Figure 3-14.

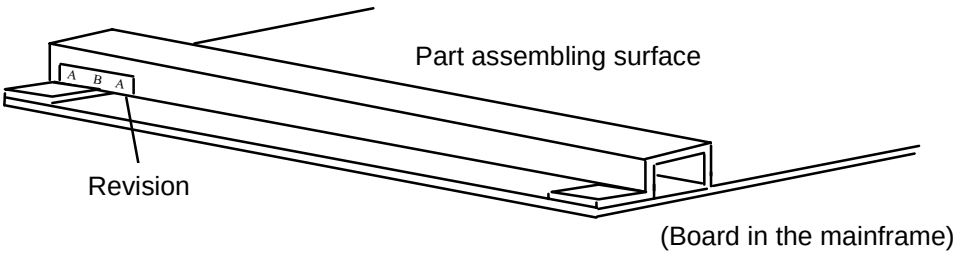

Figure 3-14 Location of Version Marking

The version of a board consists of three characters, meaning of which character is shown below:

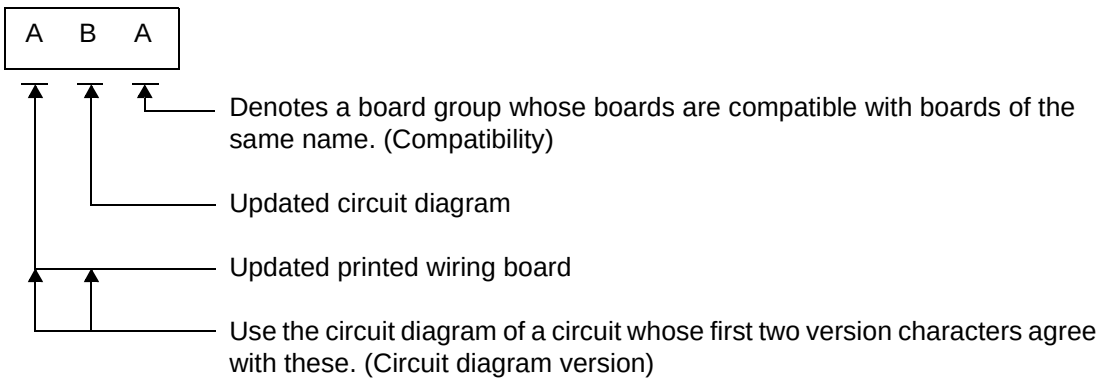

A board may only be replaced with a spare board whose version is compatible. (The same revision or later)

CAUTION!
When a board is replaced, it is necessary to update a board version managing file (System Configuration File) according to the procedures described in Section 3.8.
In addition, it is necessary to execute /CLRCAL/A↵ in the controller mode even if a new board has the same version code as that of the replaced one.

3.7.2 Confirmation of Jumper Connection and Switch Set

When replacing a board shown in Table 3-3, check that the jumper connections or digital switch setting on a new board is same as that on old one.

Table 3-1 Boards Requiring Jumper Connection or Switch Setting Check

Board	Circuit name	Unit name	Slot No.
BGR-023126	VIO I/F	TP/VIO	Slot 2
WBL-H36741TP5	TP5	TP/VIO	Slot 7
BGR-022363	DPU I/F	DPU	Slot 1, 18
BGR-022410	FM CONT	FTU	Slot 21
BIR-024571/X02	FTU I/F	FTU	Slot 23

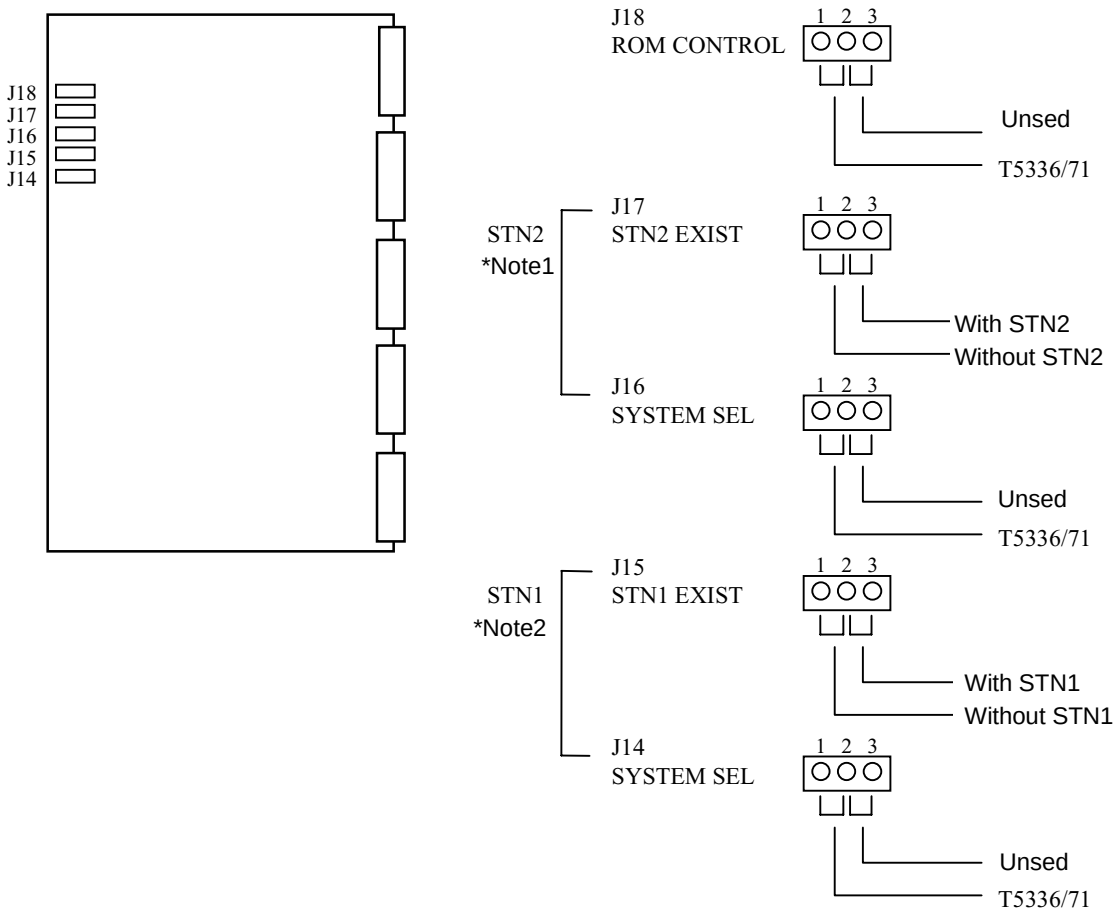

Note1: ***When J17 is set to "Without STN2" , remove the BGR-023419 (VIO CONT), which is inserted into the TP/VIO unit Slot4, from the test system.***

Note2: ***When J15 is set to "Without STN1", remove the BGR-023419 (VIO CONT), which is inserted into the TP/VIO unit Slot3, from the test system.***

Figure 3-15 BGR-023126 (VIO I/F) Jumper Setting

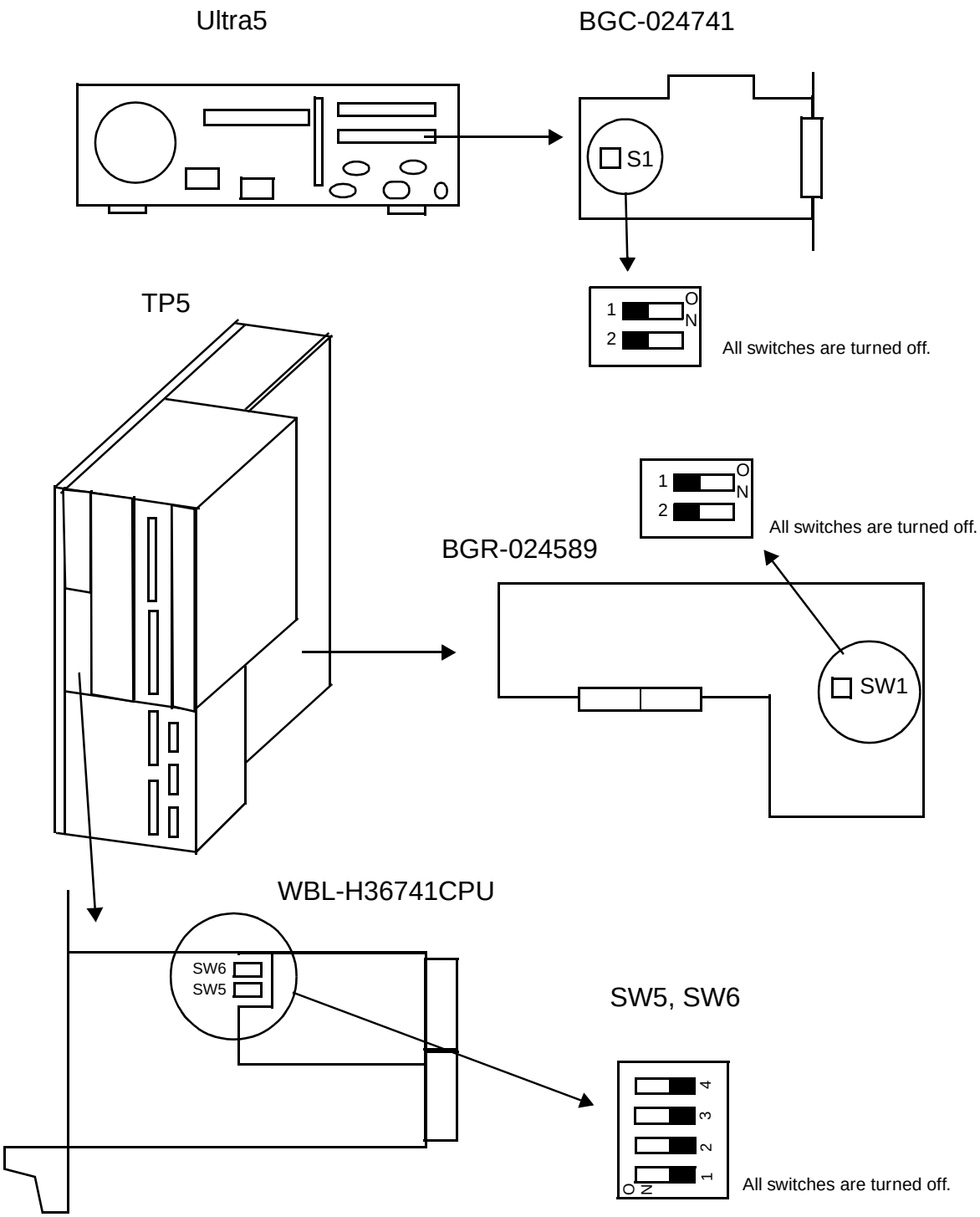

Figure 3-16 TP5 Jumper Setting

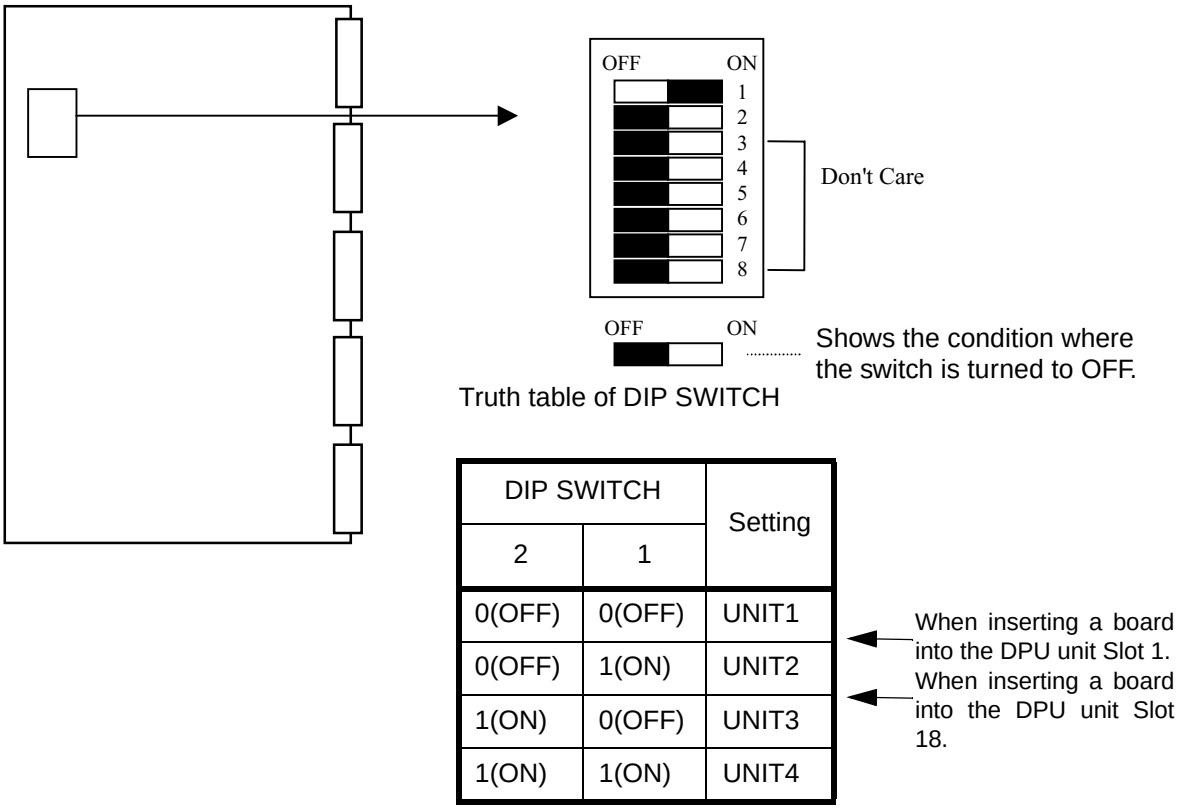

DIP SWITCH		Setting
2	1	
0(OFF)	0(OFF)	UNIT1
0(OFF)	1(ON)	UNIT2
1(ON)	0(OFF)	UNIT3
1(ON)	1(ON)	UNIT4

Figure 3-17 BGR-022363 DPU I/F Jumper Setting

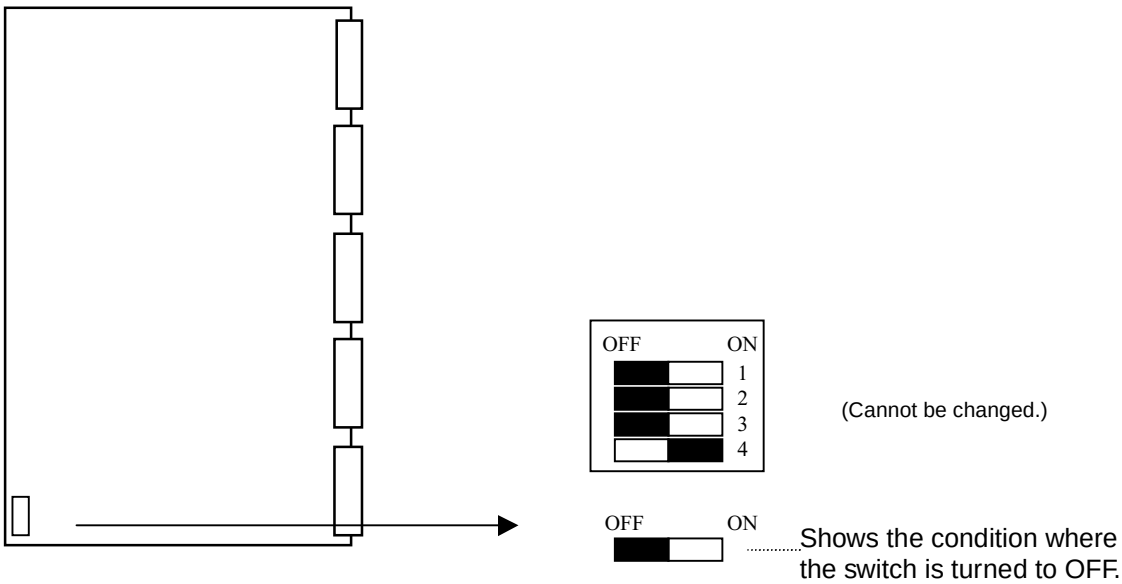

Figure 3-18 BGR-024410 FMCONT Jumper Setting

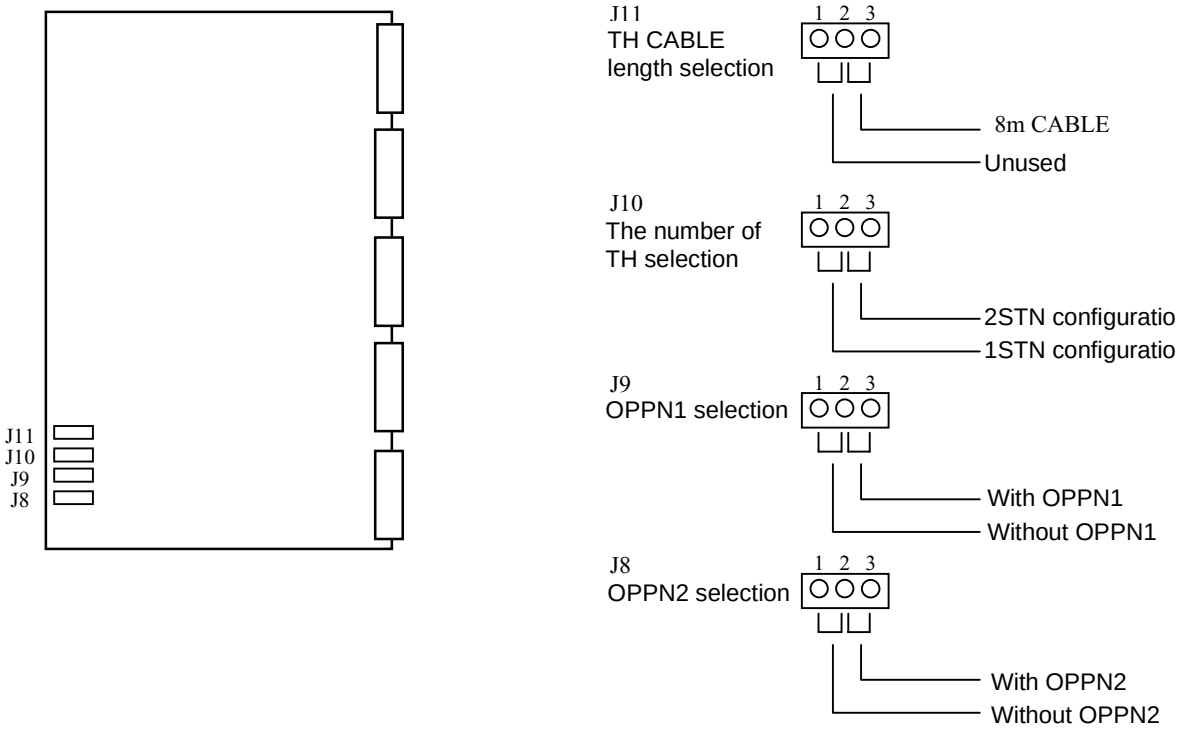

Figure 3-19 BIR-024571/X02 FTU I/F Jumper Setting

3.7.3 Installing FTU Unit Boards

(1) Pin connectors are mounted on the FTU unit backboard and are easily damaged because their pitch is narrow. Check to see that no pin is bent and no connector housing is broken before installing boards to the FTU unit.

(2) The FTU unit shows board names to identify each slot and boards also have their names as shown in Figure 3-20.
Each board has to be installed into the slot having the same name as the board.

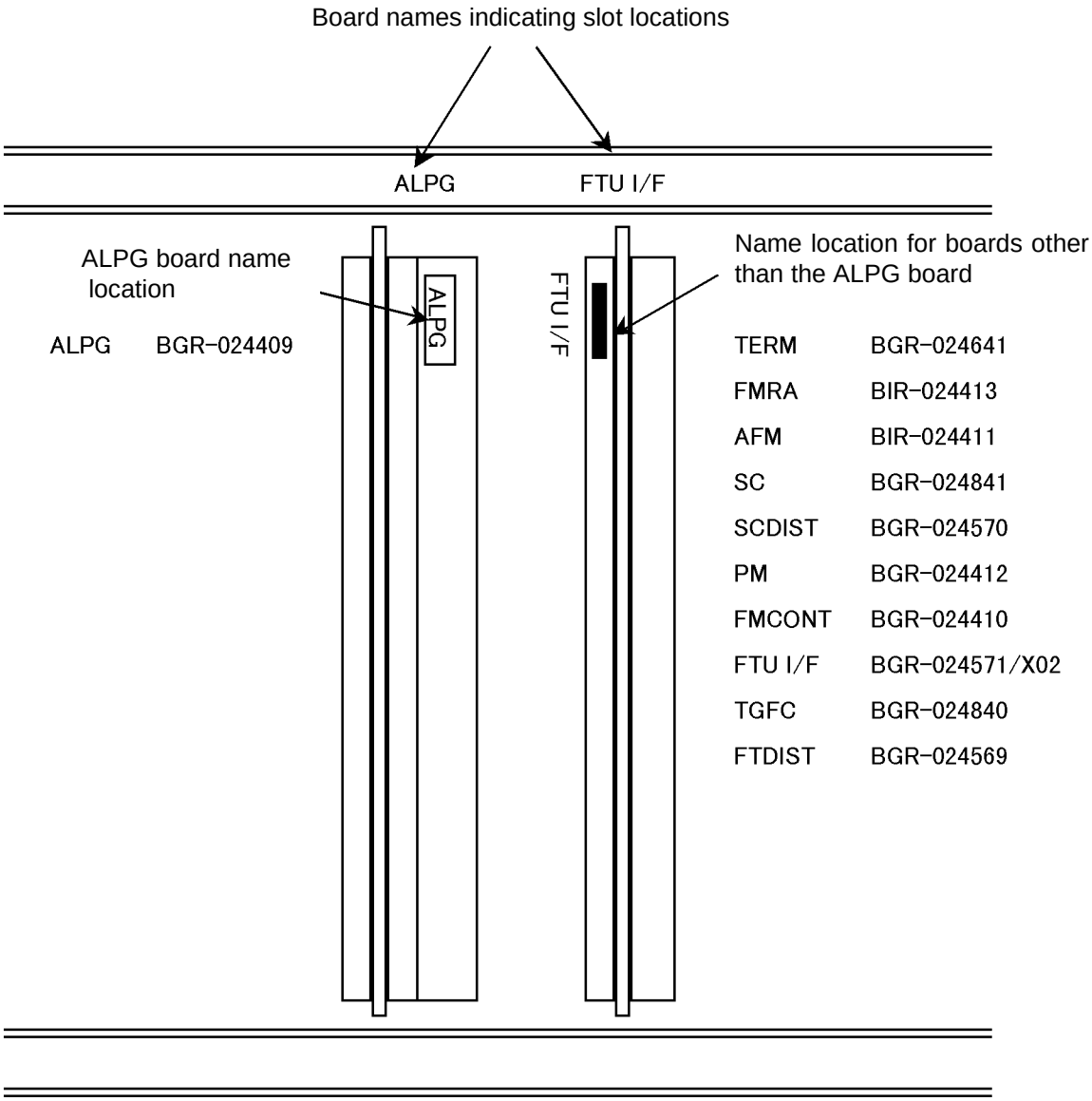

Figure 3-20 FTU Unit Board Name Locations

3.7.4 Installing the TP5 into the TP/VIO unit

(1) The TP5 unit has to be installed according to the procedure described below
Insert the TP5 unit to the TP/VIO unit and fit the convex part of the fixture with the concave guide rail, which is located in the lower part of the TP/VIO unit (see Figure 3-21).
Then, fold the fixture up and secure it to the TP5 unit using two screws.

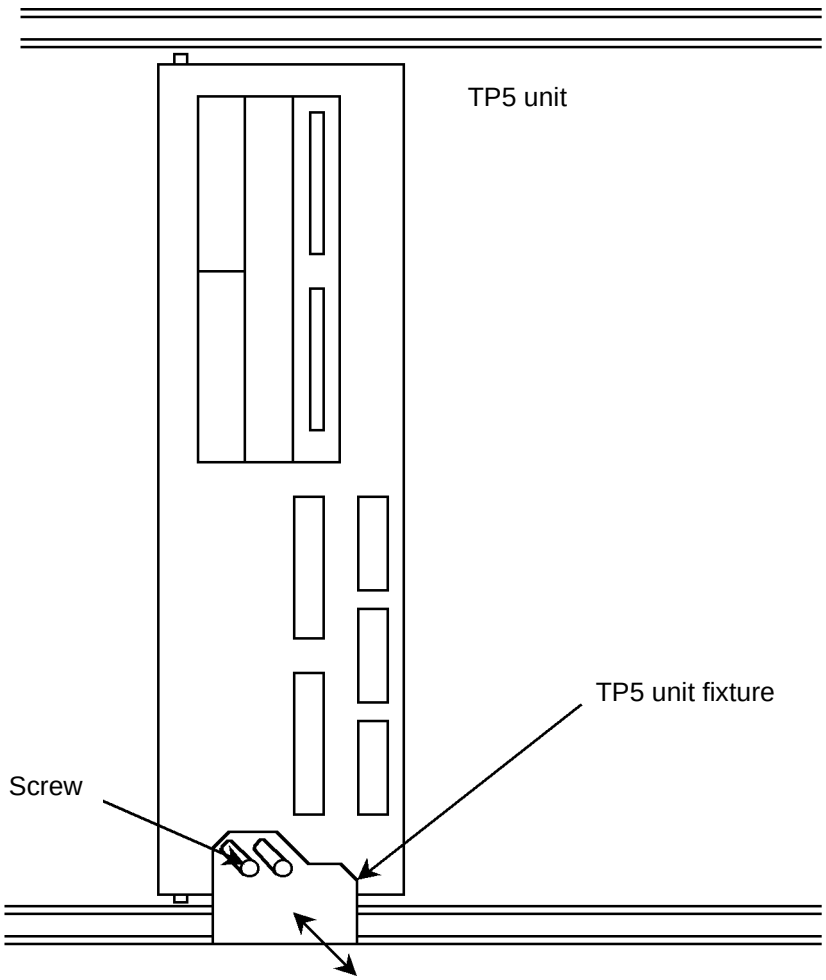

Figure 3-21 TP5 Unit Installation

3.8 Check Items Following Board Replacement

3.8.1 Execution of Diagnostic Program

Always check the system for normal operation by executing the tester section diagnostic program “PRO T5371” following board replacement. Refer to T5300 Series Memory Test System Tester Section Diagnostic Program/Initialization Program Operating Procedure for execution of diagnosis.

3.8.2 Updating Version Data File

(1) When a failed board is found, the version of the mounted board is displayed. Information required for display of the version has already been stored in a version data file. Update the version data file using the following procedure whenever the board version (circuit diagram revision) changes by being replaced. Save the updated file to a floppy disk according to the procedure described in 3.8.3.

Version information file name DAT $DDCM002

(2) Initiate the tester driver in a customer or an user account. Then, enter /DIAG/R command to start a processing program to update a version data file.

```
    $ test↵

    CONTROLLER READY

/DIAG/R↵ (a)

BOARDNAME/REVISION PROCESSING PROGRAM
0. UPDATE DATA FILE & RETURN
1. RETURN TO SYSTEM
2. LIST UP BOARDNAME/REVISION
3. CHANGE BOARDNAME/REVISION
4. OUTPUT DEVICE SELECT    DEV=1
SELECT <0-4> .............>3↵ (b)

CHANGE BOARDNAME/REVISION

    UNIT NAME :  TPVIO DPU FTU TH1 THC1 TH2 THC2 RCPU

SELECT ......>  FTU↵ (c)

  (Move cursor to the required position and change the item) (d)

  (When the change is completed;)
  CTRL/Z (Press CTRL key and key Z together) (e)
```

```
  <E> EXIT
  <Q> QUIT
  <P> EXIT & PREVIOUS UNIT   DPU
  <N> EXIT & NEXT UNIT       TH1
  <C> CONTINUE                       [E, Q, P, N, C & CR]......> (f)

CHANGE BOARDNAME/REVISION

  UNIT NAME : TPVIO DPU FTU TH1 THC1 TH2 THC2 RCPU

  SELECT .....> ↵ (g)

BOARDNAME/REVISION PROCESSING PROGRAM
0.UPDATE DATA FILE & RETURN
1.RETURN TO SYSTEM
2.LIST UP BOARDNAME/REVISION
3.CHANGE BOARDNAME/REVISION
4.OUTPUT DEVICE SELECT     DEV=1
SELECT <0-4> .............>0↵ (h)

 END SAVE
```

① Start the version data update program. → (a)

② Set the revision mode. → (b)

③ Enter the name of the unit having the board to be revised. → (c)

The following table lists the mnemonics of unit:

Mnemonic	Unit names
TPVIO	TPVIO unit
DPU	Programmable power supply, DC test unit
FTU	Function Test Unit
TH1-2	Test head (only P.E. card available) station 1-2
THC1-2	Test head (other than P.E. card) station 1-2
RCPU	RCPU Unit

④ Update the version (to match the version No. of the board installed on the system). → (d)

The following table describes each key:

Cursor movement	↓↑←→	Moves the cursor in the direction of each arrow.
	<CR>	Moves the cursor to the top of the board name of the next slot.
	<LF>	Moves the cursor to the top of the board name of the next slot when the cursor is on the board name position; or moves it to the top of version number of the board of the next slot when it is on the version No. position.
	<TAB>	Moves the cursor to the top of the version number of the board in the current slot when the cursor is on the board name position; or moves the cursor to the top of the board name of the next slot when it is on the version No. position.
	<SPACE>	Same as <TAB>
	CTRL/T	Moves the cursor to the top of the board name of the first slot.
	CTRL/B	Moves the cursor to the top of the board name of the last slot.
	CTRL/N	Moves the cursor to the top of the board name of an arbitrary slot.
Delection	<DEL>	Deletes one character just before the cursor.
	CTRL/D	Deletes one character just above the cursor.
	CTRL/W	Deletes a board name when the cursor is on the board name position; or deletes the version number when it is on the version No. position. The deleted data is stored in the delete buffer.
	CTRL/L	Deletes the slot (including both board name and version number on which the cursor is positioned. The deleted data is stored in the delete buffer.
	CTRL/U	Displays the contents of the delete buffer.
Termination	CTRL/Z	Terminates the revision mode.

⑤ Terminate the mode to update a version number. → (e)

⑥ Input the termination mode of the version update. → (f)

Each termination mode is shown below.

<E> Exit	Terminates the mode after data update.
<Q> Quit	Terminates the mode without data update.
<P> Exit & previous unit	Moves the operation to the preceding unit after data update.
<N> Exit & next unit	Moves the operation to the next unit after data update.
<C> Continue	Continues the operation on the current unit.

Note: ***The update mentioned above is confined to the one on the memory only. After correcting entries in a data file on a disk, terminate the mode with 0↵.***

⑦ Terminate the version data update program. → (h)

3.8.3 Loading/Saving Version Data File

(1) Version data file has been provided by means of a floppy disk labeled as T5371 SYSTEM CONFIGURATION FILE. The following cases require loading/saving the file from/to the floppy disk.

(a) Saving is needed when;

- Disk file has been modified when a board is replaced.
- System configuration has been changed due to system expansion, etc.

(b) Loading is needed when;

- Operating system has been loaded with fully initializing the system.

(2) Mount the floppy disk on a floppy drive in the environment processor.

(3) Operation

① Loading from floppy disk

(a) Mount the floppy disk of T5371 SYSTEM CONFIGURATION FILE onto the floppy drive in the environment processor.

(b) Perform the following operation in the shell command.

(c) Login by user name “asx”

```
% volcheck↵
% tar xvf /vol/dev/rdiskette0/unlabeled \$ddcm002.dat↵
```

Note: ***Enter the following, “\” (back slash) in front of “$” character to the file including “$” character on the head of file name.***

```
\$ddcm002.dat
```

Press the floppy drive eject button to remove the media.

(d) Logout

(e) Login by root

(f) Move the file to /export/home/atsys/all/dp0_w51.

```
# cd /export/home/atsys/all/dp0_w51↵
# mv /export/home/asx/\$ddcm002.dat\$ddcm002.dat↵
```

Note: /export/home/atsys/all/dp0_w51 is AT_ADP0W and follows the user specification at installation.

(g) Change file protection.

```
# chmod a=rw \$ddcm002.dat↵
```

(h) Ensure if the protection has been properly changed.

```
# ℓs -ℓ \$ddcm002.dat↵
 -rw-rw-rw ℓ asx xxx date $ddcm002.dat
```

② Save to floppy disk.

(a) Insert the floppy disk “T5371 SYSTEM CONFIGURATION FILE to the floppy disk drive of environment processor.

(b) The following operation is performed by shell command.

(c) Login by “asx”.

(d) Write the file to floppy disk..

```
%volcheck↵
% tar cvf /vol/dev/rdiskette0/unlabeled /export/home/atsys/all/dp0_w51/
\$ddcm001.dat \$ddcm002.dat ↵
                                          ↑
                                   Pass name specification
```

(e) Press the floppy drive eject button to remove the media.

3.8.4 Updating Timing Calibration Data

(1) Calibration compensation data for the tester section will change because of replacing a board. It is necessary to update the calibration data by using the following command in the tester driver after replacing a board.

```
/CLRCAL/A↵
```

If a device program is executed without this operation, a device is tested using an old compensation data before board replacement, thereby causing an incorrect measurement.

/CLRCAL/A: Used to update the calibration files in all the directories.

/CLRCAL: Used to update the calibration files in the directory.

3.9 EXTENDER CARD

Table 3-2 List of EXTENDER CARD

Name	Standard	Purpose
VL 302-position EXTENDER	BGS-024773	ALPG, FM CONT, AFM, FMRA, PM, TGFC, FTDIST, SC, SCDIST, TERM, FTU IF
DPU 120-position EXTENDER	BGS-024807	DPU I/F, DC, PPS
TP 90-position EXTENDER	BGS-010643	TP5
VIO 120-position EXTENDER	BGS-013825X03	VIO I/F , VIO CONT
PE EXTENDER	BGR-023379	PE
TH CONT EXTENDER	BGR-024857	TH CONT, DC MUX
CAL SIG EXTENDER	BGR-023377	CAL SIG

4 TESTER UNIT POWER SUPPLY

4.1 AC Power Supply Panel Layout

T5371 REAR VIEW

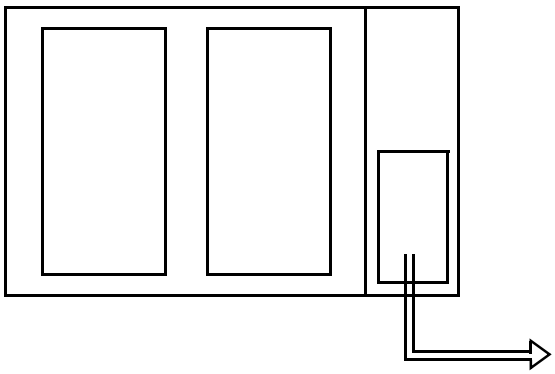

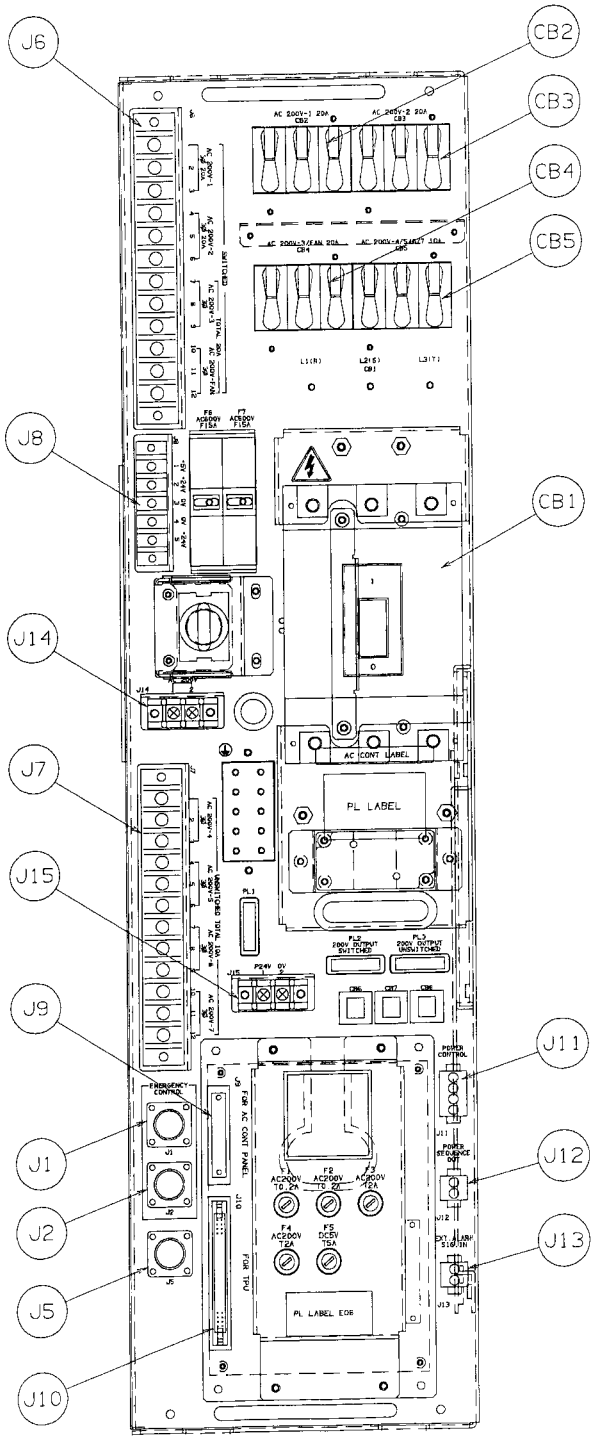

Symbol	Unit name	Purpose/specification
J1	Connector	EMO
J2	Connector	EMO
J5	Connector	POWER CONTROL INPUT
J6	Connector	200VAC OUTPUT
J7	Connector	200VAC OUTPUT
J8	Connector	SMOKE DETECTOR POWER SUPPLY
J9	Connector	KEY CONTROL INPUT
J10	Connector	TP CONTROL INPUT
J11	Connector	POWER CONTROL INPUT
J12	Connector	ON/OFF SIGNAL OUTPUT
J13	Connector	EXTERNAL CUT-OFF INPUT
J14	Connector	200 VAC OUTPUT (for SUB)
J15	Connector	SUB ACCONT 24 V
SW1	Switch	200 V PS for BREAKER ON
CB1	Breaker	POWER INPUT 200V, 50A, 3ϕ
CB2	Breaker	200VAC OUTPUT, 20A
CB3	Breaker	200VAC OUTPUT, 20A
CB4	Breaker	200VAC OUTPUT, 20A
CB5	Breaker	200VAC OUTPUT, 10A

Figure 4-1 AC Power Supply Panel (MAIN AC CONT)

4.1 AC Power Supply Panel Layout

T5371 REAR VIEW

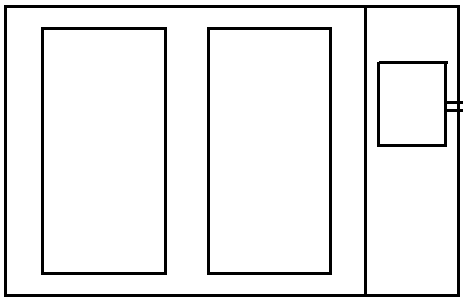

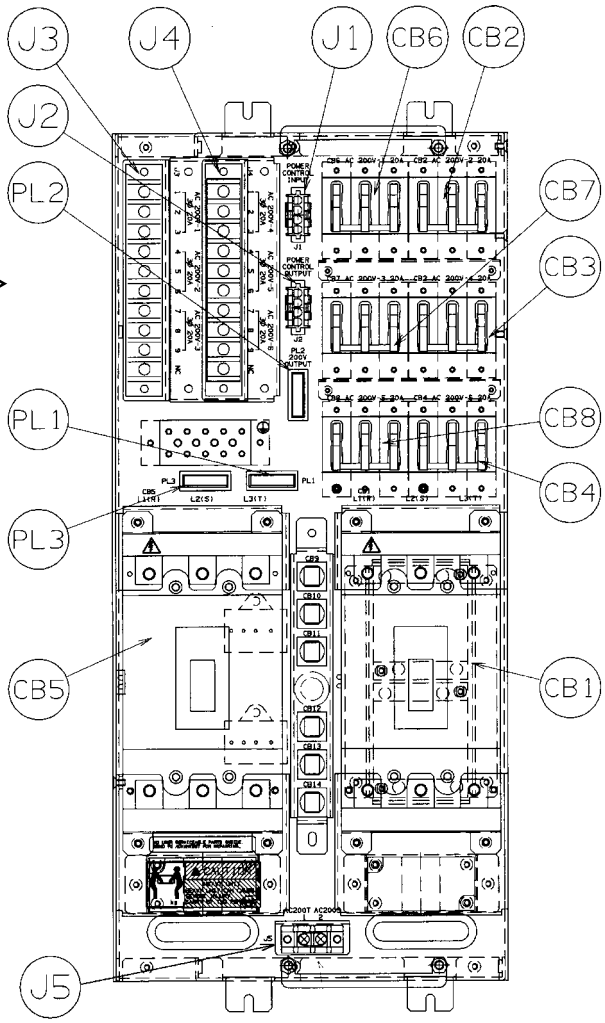

Symbol	Unit name	Purpose/specification
J1	Connector	POWER CONTROL INPUT
J2	Connector	POWER CONTROL OUTPUT
J3	Connector	200VAC OUTPUT
J4	Connector	200VAC OUTPUT
J5	Connector	200VAC INPUT (FROM MAIN AC)
CB1	Breaker	POWER INPUT 200V, 50A, 3ϕ
CB2	Breaker	200VAC OUTPUT, 20A
CB3	Breaker	200VAC OUTPUT, 20A
CB4	Breaker	200VAC OUTPUT, 20A
CB5	Breaker	POWER INPUT 200V, 50A, 3ϕ
CB6	Breaker	200VAC OUTPUT, 20A
CB7	Breaker	200VAC OUTPUT, 20A
CB8	Breaker	200VAC OUTPUT, 20A

Figure 4-2 AC Power Supply Panel (SUB AC CONT)

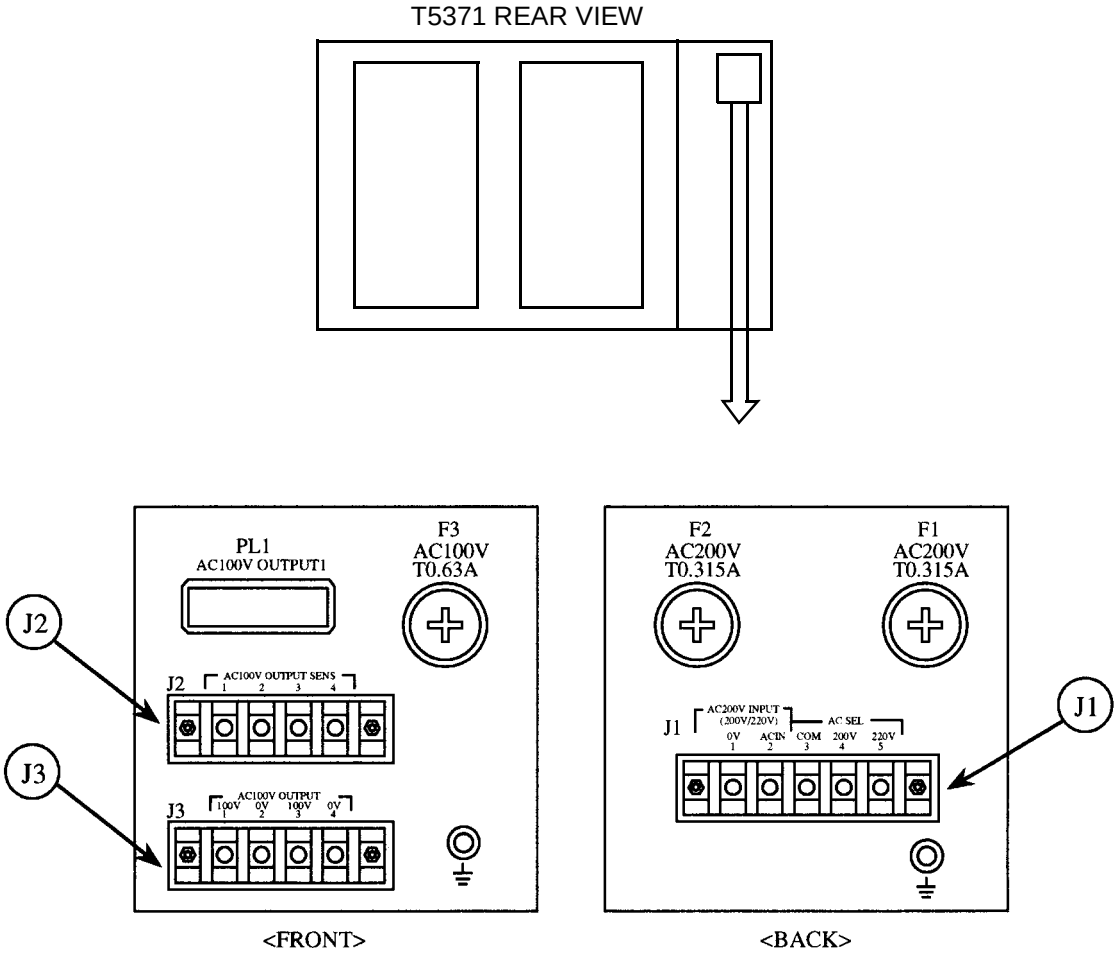

Symbol	Unit name	Purpose/specification
J1	Connector	200VAC INPUT
J2	Connector	100VAC OUTPUT SENS
J3	Connector	100VAC OUTPUT

Figure 4-3 Transformer Box (TFB) Panel (for unit code KH3-71150)

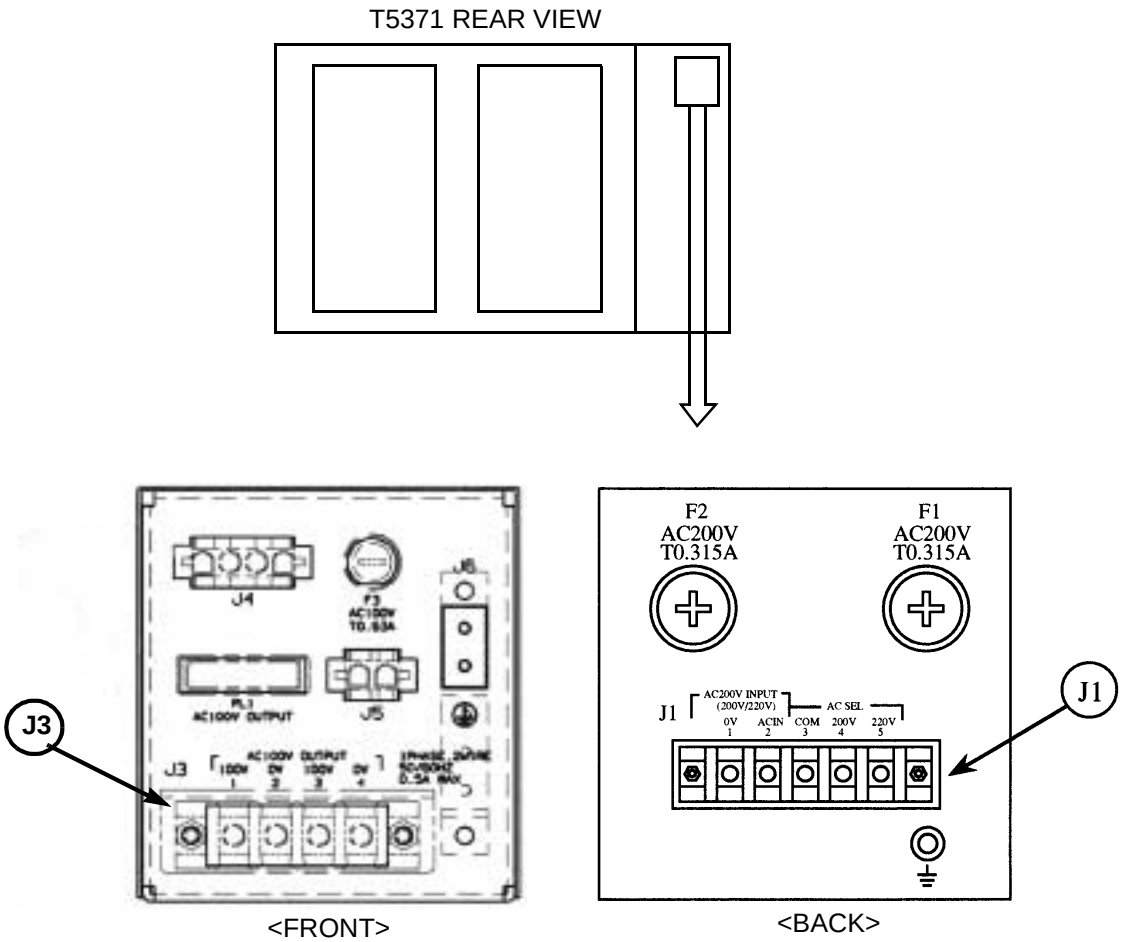

Symbol	Unit name	Purpose/specification
J1	Connector	200VAC INPUT
J3	Connector	100VAC OUTPUT

Figure 4-4 Transformer Box (TFB) Panel (for unit code KH3-71383)

4.2 DC Power Supply Unit Layout

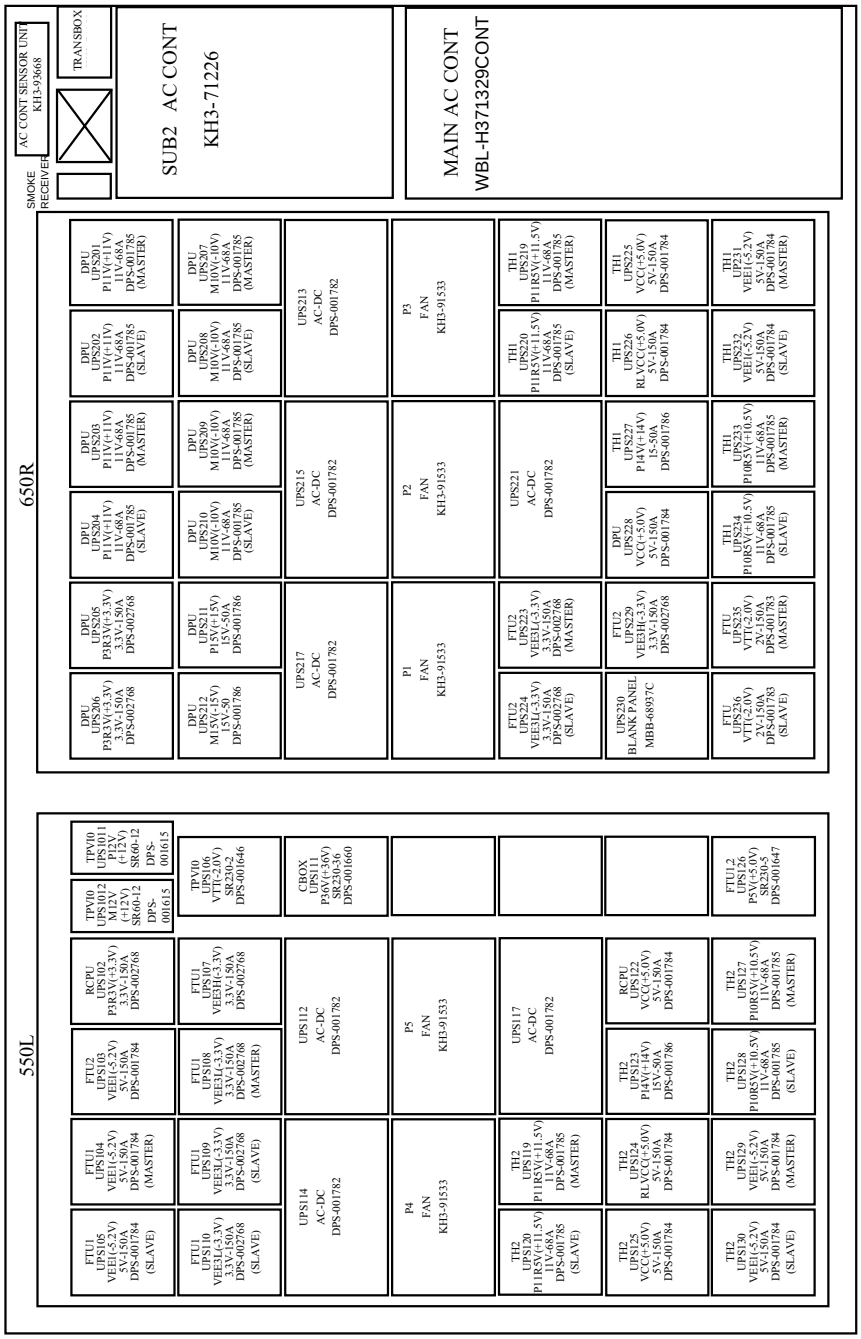

Condition where the rotating base is closed in the MF rear side

Figure 4-5 DC Power Supply Unit Layout (Rotating Base)

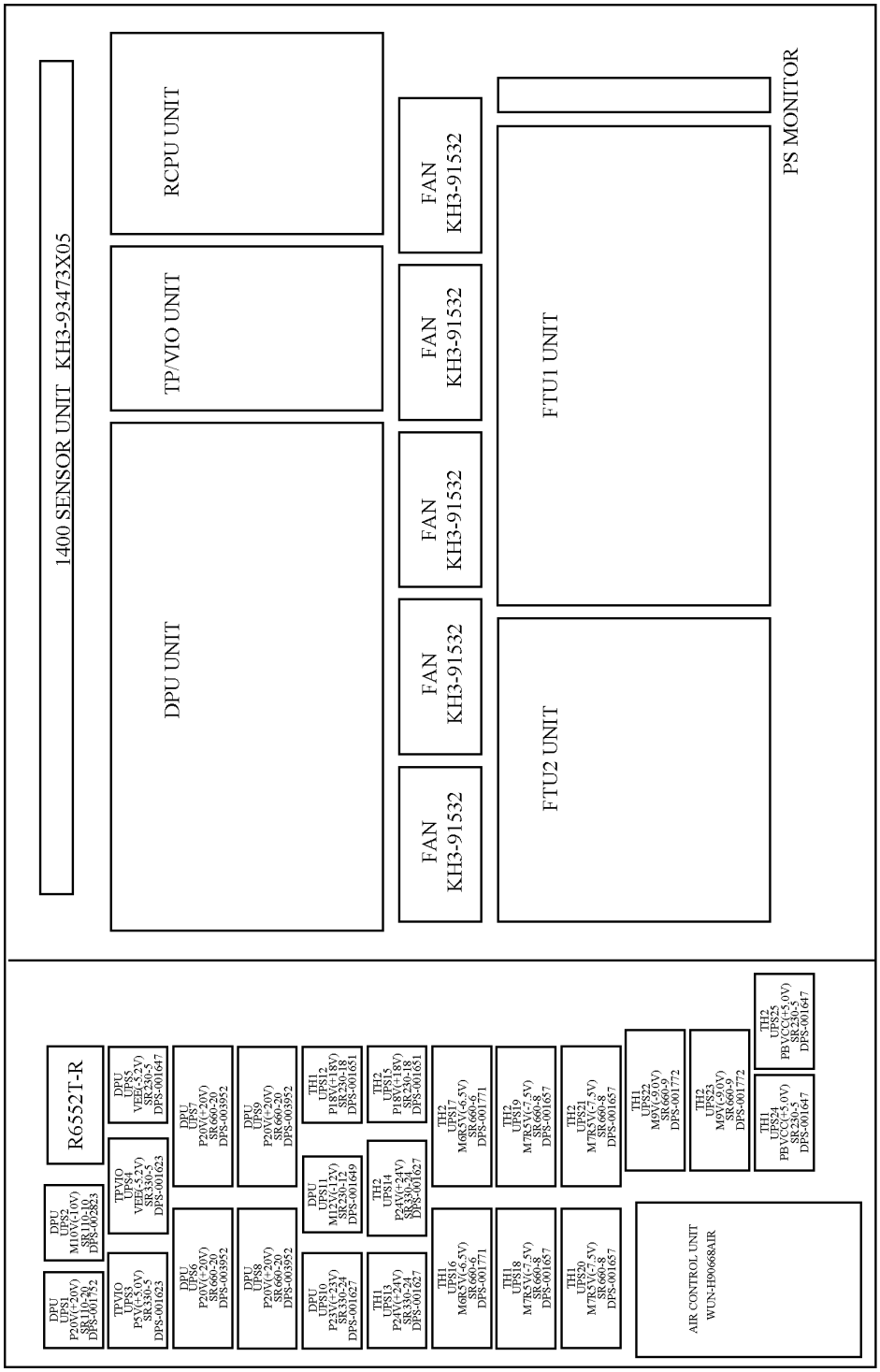

Figure 4-6 DC Power Supply Unit Layout (AC CONT Section)

Table 4-1 DC Power Supply Unit Specifications (1/3)

Left-rotating Frame Power Supply

UPS No.	Code name	Remarks
1011	DPS-001615	+12V
1012	DPS-001615	-12V
102	DPS-002768	+3.3V
103	DPS-001784	-5.2V
104	DPS-001784	-5.2V
105	DPS-001784	-5.2V
106	DPS-001646	-2.0V
107	DPS-002768	-3.3V
108	DPS-002768	-3.3V
109	DPS-002768	-3.3V
110	DPS-002768	-3.3V
111	DPS-001660	+36V
112	DPS-001782	AC-DC
114	DPS-001782	AC-DC
117	DPS-001782	AC-DC
119	DPS-001785	+11.5V
120	DPS-001785	+11.5V
122	DPS-001784	+5.0V
123	DPS-001786	+14V
124	DPS-001784	+5.0V
125	DPS-001784	+5.0V
126	DPS-001647	+5.0V
127	DPS-001785	+10.5V
128	DPS-001785	+10.5V
129	DPS-001784	-5.2V
130	DPS-001784	-5.2V

Table 4-1DC Power Supply Unit Specifications (2/3)

Right-rotating Frame Power Supply

UPS No.	Code name	Remarks
201	DPS-001785	+11V
202	DPS-001785	+11V
203	DPS-001785	+11V
204	DPS-001785	+11V
205	DPS-002768	+3.3V
206	DPS-002768	+3.3V
207	DPS-001785	-10V
208	DPS-001785	-10V
209	DPS-001785	-10V
210	DPS-001785	-10V
211	DPS-001786	+15V
212	DPS-001786	-15V
213	DPS-001782	AC-DC
215	DPS-001782	AC-DC
217	DPS-001782	AC-DC
219	DPS-001785	+11.5V
220	DPS-001785	+11.5V
221	DPS-001782	AC-DC
223	DPS-002768	-3.3V
224	DPS-002768	-3.3V
225	DPS-001784	+5.0V
226	DPS-001784	+5.0V
227	DPS-001786	+14V
228	DPS-001784	+5.0V
229	DPS-002768	-3.3V
230		BLANK PANEL
231	DPS-001784	-5.2V
232	DPS-001784	-5.2V
233	DPS-001785	+10.5V
234	DPS-001785	+10.5V
235	DPS-001783	-2.0V
236	DPS-001783	-2.0V

Table 4-1DC Power Supply Unit Specifications (3/3)

AC CONT FRONT Power Supply

UPS No.	Code name	Remarks
1	DPS-001752	+20V
2	DPS-002823	-10V
3	DPS-001623	+5.0V
4	DPS-001623	-5.2V
5	DPS-001647	-5.2V
6	DPS-003952	+20V
7	DPS-003952	+20V
8	DPS-003952	+20V
9	DPS-003952	+20V
10	DPS-001627	+23V
11	DPS-001649	-12V
12	DPS-001651	+18V
13	DPS-001627	+24V
14	DPS-001627	+24V
15	DPS-001651	+18V
16	DPS-001771	-6.5V
17	DPS-001771	-6.5V
18	DPS-001657	-7.5V
19	DPS-001657	-7.5V
20	DPS-001657	-7.5V
21	DPS-001657	-7.5V
22	DPS-001772	-9.0V
23	DPS-001772	-9.0V
24	DPS-001647	+5.0V
25	DPS-001647	+5.0V

4.3 Replacing the DC Unit (Hot Work Type 1)

CAUTION!
Switch off the breaker in the AC Control unit panel to shut off the power and check to see that power supplies are not live.
After switching off the breaker, be sure to lock and tag the breaker switch.
For the procedure of locking and tagging the breaker switch, refer to Chapter "2. Basic Precaution" of "IC Test System Safe Handling Guide".

4.3.1 Removing Power Supplies

(1) Disconnect all cables from the power supply.
Make sure that cables are labeled with the connection address. If cables are not labeled, tag them appropriately.

(2) Remove the four screws-shown in Figure 4-7.

(3) Remove the power supply.

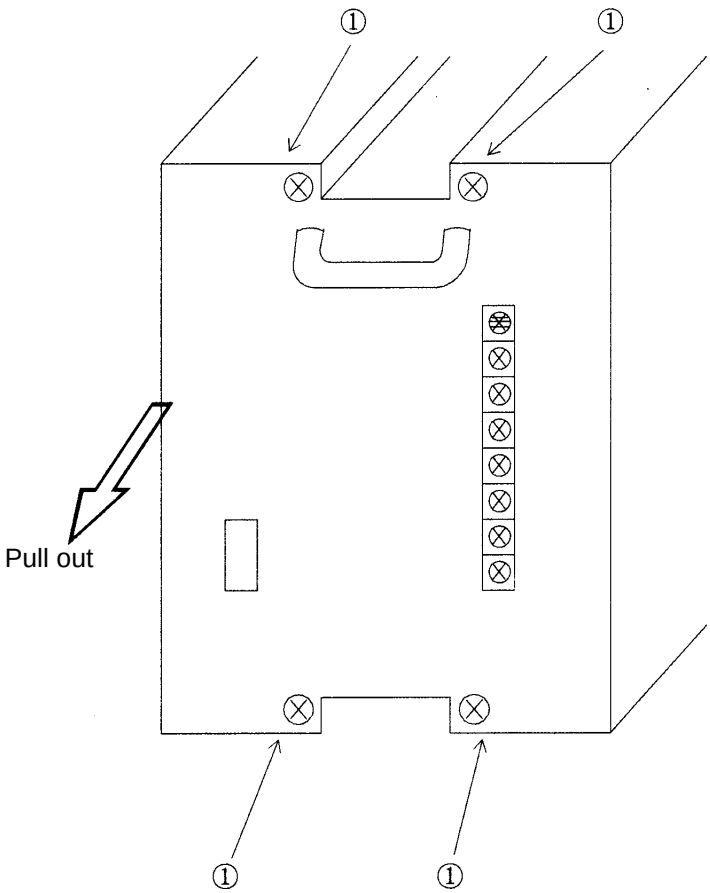

Figure 4-7 Power Unit Removing

4.3.2 Notes when Installing the Power Supply Unit

A cable marker is attached to each shunt wiring cable. Connect the cables as directed on their respective labels.

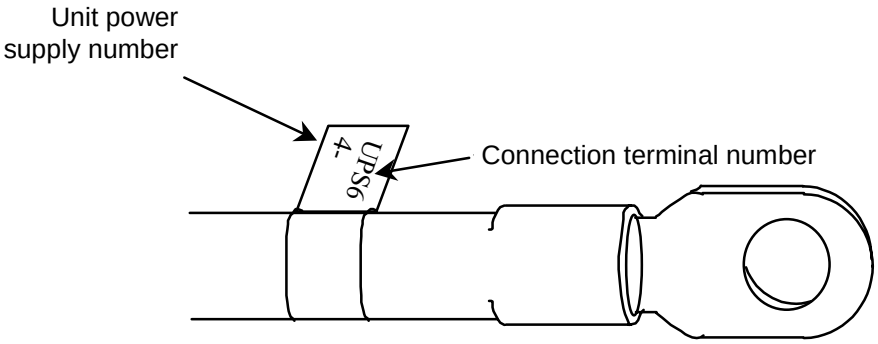

Figure 4-8 Cable Marker on Shunt Wiring Cable

Connect the “+” side of the connecting terminal to the “+” output terminal of the power supply unit, and the “–” marked side to the “–” output terminal. Use a torque of appropriate size for tightening the screws.

4.4 PB Power Supply Protector

The PB power supply protector is provided on the lower section of the AC control panel of the main frame front panel. It protects PBVCC used on the performance board from a short circuit.

After this protector operated, remove the factor of the short circuit to reset the protection. It can be reset without turning off the power of the system.

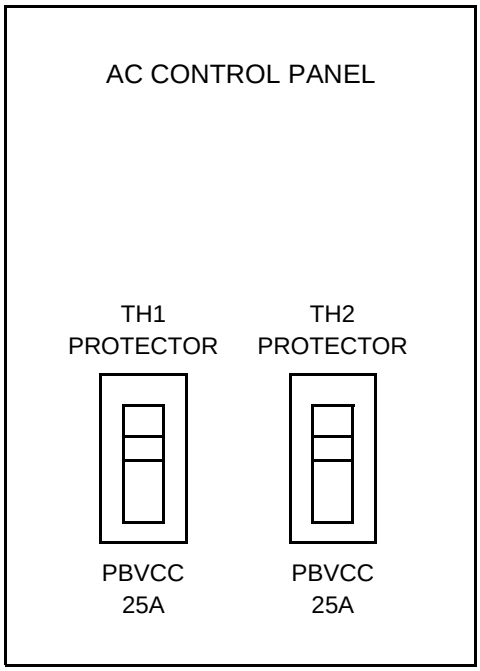

Figure 4-9 PB Power Supply Protector

4.5 Replacing the AC Control Unit

Because the AC Control unit is heavy, perform its replacement with more than one person.

5 SMALL PARTS REPLACEMENT

5.1 Replacing Fan Blocks (Hot Work Type 1)

CAUTION!
Switch off the breaker in the AC Control unit panel to shut off the power and check to see that the fans have stopped.
After switching off the breaker, be sure to lock and tag the breaker switch.
For the procedure of locking and tagging the breaker switch, refer to Chapter "2. Basic Precaution" of "IC Test System Safe Handling Guide".
When powering off the system with the power key switch, be careful with fans that keep rotating for 30 sec after power off.

5.1.1 Replacement of the Unit Power Supply Fan Block

(1) Disconnect all cables connected to the fan block.

(2) Undo the four screws on the fan block front panel. (Figure 5-1 ①)

(3) Pull out the fan block.

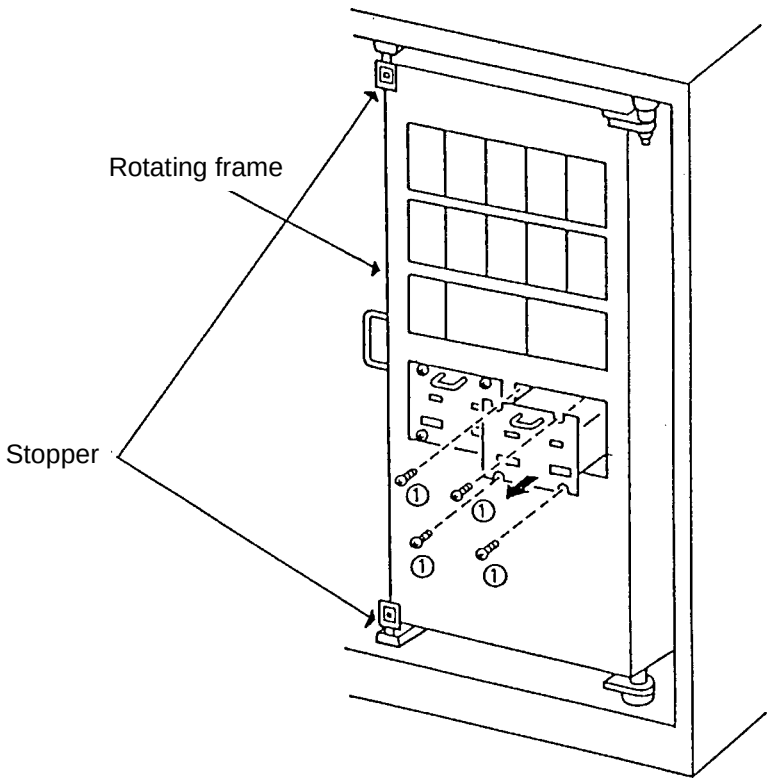

Figure 5-1 Replacement of the Unit Power Supply Fan Block

5.1.2 Replacement of the Unit Fan Block

(1) Unlock the stoppers attached to the upper and lower section of the rotating frame and open the rotating frame, as shown in Figure 5-2.

(2) Disconnect all cables connected to the fan block.

(3) Undo the two screws on the fan block front panel. (Figure 5-2 ①)

(4) Pull out the fan block.

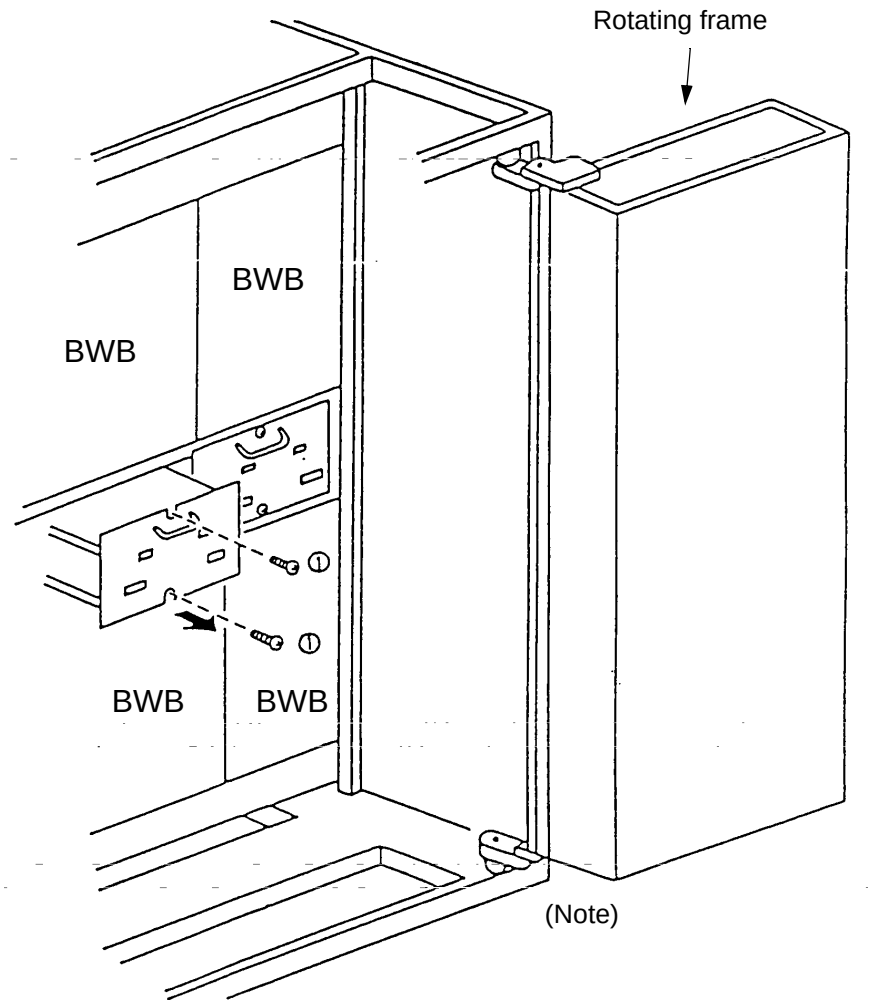

Figure 5-2 Replacement of the Unit Fan Block

Note:
The rotating frame stops closing after it rotates 90°. When it stops, pull the thumb-screw in the rotating axis attached to the lower section of the rotating frame, then shut the rotating frame.

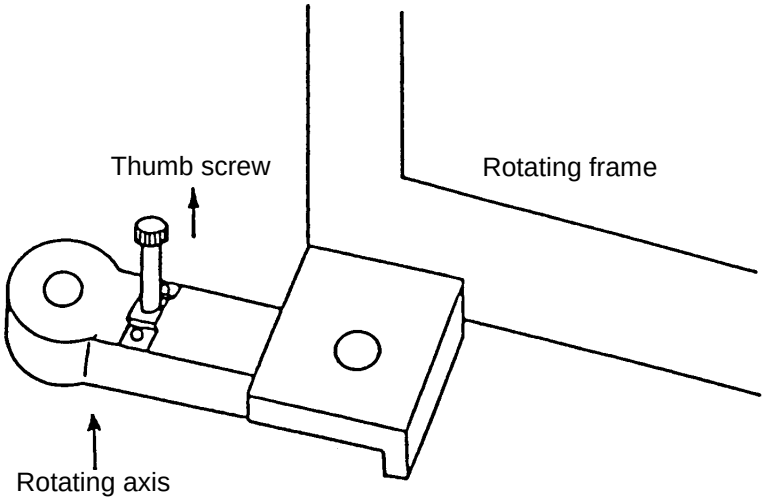

6 BOARD LOCATION OF TESTER UNIT AND CABLE CONNECTION

6.1 Unit Location in Tester Section

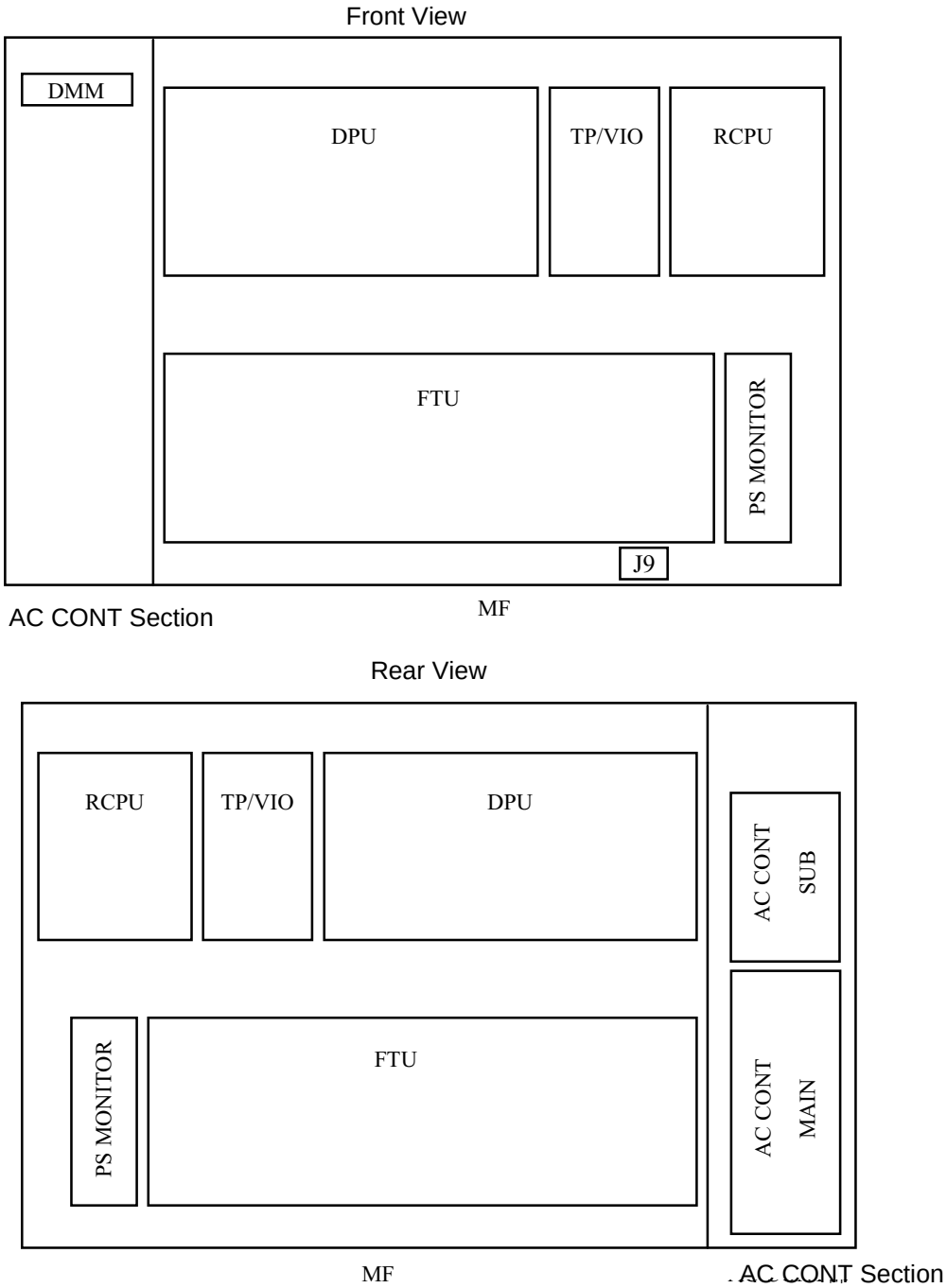

Figure 6-1 Unit Block Layout of Tester Main Frame

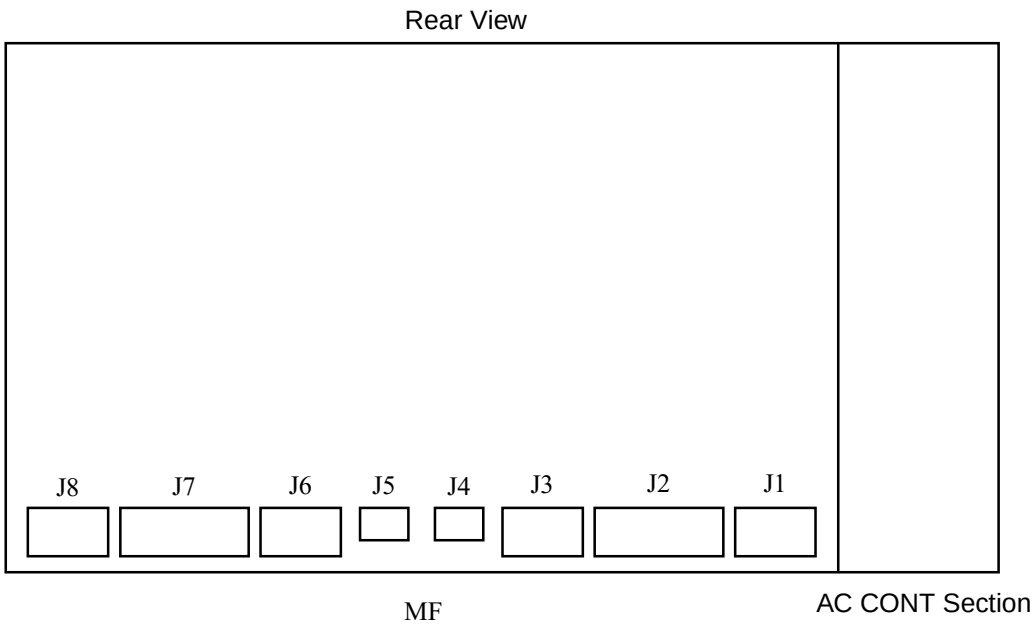

Figure 6-2 Terminal Block Layout of Tester Main Frame

6.2 Slot Number and Board Name of Tester Unit

Table 6-1 Slot No. and Board Name of FTU(1/2)

[For systems with AFM installed]

Slot No.	Board No.	Circuit Name	Remarks		
1	BGR-024641	TERM	———		
2	BIR-024411	AFM	33-50,97-114	CHILD E3,F3,G3,H3	STN2
3	BGR-024841	SC	33-52	CHILD E1-H3	STN2
4	BGR-024841	SC	97-116	CHILD E1-H3	STN2
5	BIR-024411	AFM	33-50,97-114	CHILD E1,F1,G1,H1	STN2
6	BGR-024570	SCDIST	Distributes signals to SLOT3,4,8,9		
7	BIR-024411	AFM	33-50,97-114	CHILD A3,B3,C3,D3	STN2
8	BGR-024841	SC	33-52	CHILD A1-D3	STN2
9	BGR-024841	SC	97-116	CHILD A1-D3	STN2
10	BIR-024411	AFM	33-50,97-114	CHILD A1,B1,C1,D1	STN2
11	BIR-024411	AFM	33-50,97-114	CHILD E3,F3,G3,H3	STN1
12	BGR-024841	SC	33-52	CHILD E1-H3	STN1
13	BGR-024841	SC	97-116	CHILD E1-H3	STN1
14	BIR-024411	AFM	33-50,97-114	CHILD E1,F1,G1,H1	STN1
15	BGR-024570	SCDIST	Distributes signals to SLOT12,13,17,18		
16	BIR-024411	AFM	33-50,97-114	CHILD A3,B3,C3,D3	STN1
17	BGR-024841	SC	33-52	CHILD A1-D3	STN1
18	BGR-024841	SC	97-116	CHILD A1-D3	STN1
19	BIR-024411	AFM	33-50,97-114	CHILD A1,B1,C1,D1	STN1
20	BGR-024412	PM	———		
21	BGR-024410	FMCONT	———		
22	BGR-024409	ALPG	———		
23	BIR-024571X02	FTU I/F	BIR-024571 is installed when FLASH OPTION is installed.		
24	BGR-024840	TGFC	25-30,49-52,113-116	CHILD A1-H3	STN1,2
25	BGR-024569	FTDIST	Distribute signals to SLOT24,26,27		
26	BGR-024840	TGFC	1-12,33-40,97-104	CHILD A1-D3	STN1,2
27	BGR-024840	TGFC	1-12,33-40,97-104	CHILD E1-H3	STN1,2
28	—	TGFC	No board is installed.		
29	BGR-024569	FTDIST	Distributes signals to SLOT30,31		
30	BGR-024840	TGFC	13-24,41-48,105-112	CHILD A1-D3	STN1,2
31	BGR-024840	TGFC	13-24,41-48,105-112	CHILD E1-H3	STN1,2

Table 6-1 Slot No. and Board Name of FTU(2/2)

[For systems with MRA4 installed]

Slot No.	Board No.	Circuit Name	Remarks		
1	BGR-024641	TERM	———		
2	BIR-024413	FMRA	33-50,97-114	CHILD E3,F3,G3,H3	STN2
3	BGR-024841	SC	33-52	CHILD E1-H3	STN2
4	BGR-024841	SC	97-116	CHILD E1-H3	STN2
5	BIR-024413	FMRA	33-50,97-114	CHILD E1,F1,G1,H1	STN2
6	BGR-024570	SCDIST	Distributes signals to SLOT3,4,8,9		STN2
7	BIR-024413	FMRA	33-50,97-114	CHILD A3,B3,C3,D3	STN2
8	BGR-024841	SC	33-52	CHILD A1-D3	STN2
9	BGR-024841	SC	97-116	CHILD A1-D3	STN2
10	BIR-024413	FMRA	33-50,97-114	CHILD A1,B1,C1,D1	STN2
11	BIR-024413	FMRA	33-50,97-114	CHILD E3,F3,G3,H3	STN1
12	BGR-024841	SC	33-52	CHILD E1-H3	STN1
13	BGR-024841	SC	97-116	CHILD E1-H3	STN1
14	BIR-024413	FMRA	33-50,97-114	CHILD E1,F1,G1,H1	STN1
15	BGR-024570	SCDIST	Distributes signals to SLOT12,13,17,18		STN1
16	BIR-024413	FMRA	33-50,97-114	CHILD A3,B3,C3,D3	STN1
17	BGR-024841	SC	33-52	CHILD A1-D3	STN1
18	BGR-024841	SC	97-116	CHILD A1-D3	STN1
19	BIR-024413	FMRA	33-50,97-114	CHILD A1,B1,C1,D1	STN1
20	BGR-024412	PM	———		
21	BGR-024410	FMCONT	———		
22	BGR-024409	ALPG	———		
23	BIR-024571X02	FTU I/F	BIR-024571 is installed when FLASH OPTION is installed.		
24	BGR-024840	TGFC	25-30,49-52,113-116	CHILD A1-H3	STN1,2
25	BGR-024569	FTDIST	Distributes signals to SLOT24,26,27		
26	BGR-024840	TGFC	1-12,33-40,97-104	CHILD A1-D3	STN1,2
27	BGR-024840	TGFC	1-12,33-40,97-104	CHILD E1-H3	STN1,2
28	—	TGFC	No board is installed.		
29	BGR-024569	FTDIST	Distributes signals to SLOT30,31		
30	BGR-024840	TGFC	13-24,41-48,105-112	CHILD A1-D3	STN1,2
31	BGR-024840	TGFC	13-24,41-48,105-112	CHILD E1-H3	STN1,2

Table 6-2 Slot No. and Board Name of TP/VIO

Slot No.	Board No.	Circuit Name	Remarks
1	BGR-022449	CBOX I/F	
2	BGR-023126	VIO I/F	
3	BGR-023419	VIO CONT	STN1
4	BGR-023419	VIO CONT	STN2
5			No board is installed.
6			No board is installed.
7	WBL-H36741TP5	TP5	

Table 6-3 Slot No. and Board Name of RCPU
[For systems with MRA4 installed**]**

Slot No.	Board No.	Circuit Name	Remarks
1	WBL-023084A	RCPU0	Option
2	WBL-023084A	RCPU1	Option
3	WBL-023084A	RCPU2	Option
4	WBL-023084A	RCPU3	Option
5	WBL-023084A	RCPU4	Option
6	WBL-023084A	RCPU5	Option
7	WBL-023084A	RCPU6	Option
8	WBL-023084A	RCPU7	Option
9	WBL-023086A	MCPU	Option
10	BGR-023085	MEM	Option

Table 6-4 Slot No. and Board Name of RCPU2
[For systems with MRA4 installed]

Slot No.	Board No.	Circuit Name	Remarks
1	WUN-023084B	RCPU	Option
2	WUN-023084B	RCPU	Option
3	WUN-023084B	RCPU	Option
4	WUN-023084B	RCPU	Option
5	WUN-023084B	RCPU	Option
6	WUN-023084B	RCPU	Option
7	WUN-023084B	RCPU	Option
8	WUN-023084B	RCPU	Option
9	WUN-023086B	MCPU	Option
10	BGR-023085	MEM	Option

Table 6-5 Slot No. and Board Name of DPU

Slot No.	Board No.	Circuit Name	Remarks		
1	BGR-022363	DPU I/F	For DC1-32,PPS1-32,97-128		
2		OPTION			
3	BGR-024701	DC	DC1-16		STN1
4		OPTION			
5	BGR-024701	DC	DC17-32		STN1
6		OPTION			
7	BGR-024701	DC	DC1-16		STN2
8		OPTION			
9	BGR-024701	DC	DC17-32		STN2
10	BGR-022365	PPS	PPS1-16		STN1
11	BGR-022365	PPS	PPS17-32		STN1
12	BGR-022365	PPS	PPS97-112		STN1
13	BGR-022365	PPS	PPS113-128		STN1
14	BGR-022365	PPS	PPS1-16		STN2
15	BGR-022365	PPS	PPS17-32		STN2
16	BGR-022365	PPS	PPS97-112		STN2
17	BGR-022365	PPS	PPS113-128		STN2
18	BGR-022363	DPU I/F	For PPS33-96		
19	BGR-022365	PPS	PPS33-48		STN1
20	BGR-022365	PPS	PPS49-64		STN1
21	BGR-022365	PPS	PPS65-80		STN1
22	BGR-022365	PPS	PPS81-96		STN1
23	BGR-022365	PPS	PPS33-48		STN2
24	BGR-022365	PPS	PPS49-64		STN2
25	BGR-022365	PPS	PPS65-80		STN2
26	BGR-022365	PPS	PPS81-96		STN2

Note1: STN1 contains more PPS boards than STN2.

Note2: Boards with a PPS hardware channel number of PPS 33 through 64 and 65 through 96 require the H3-1339 DPU option.

Note3: The PPS hardware channel numbers for the DUT load circuit power supply are PPS 97 through 128.

Figure 6-3 Slot and Board Names of Test Head

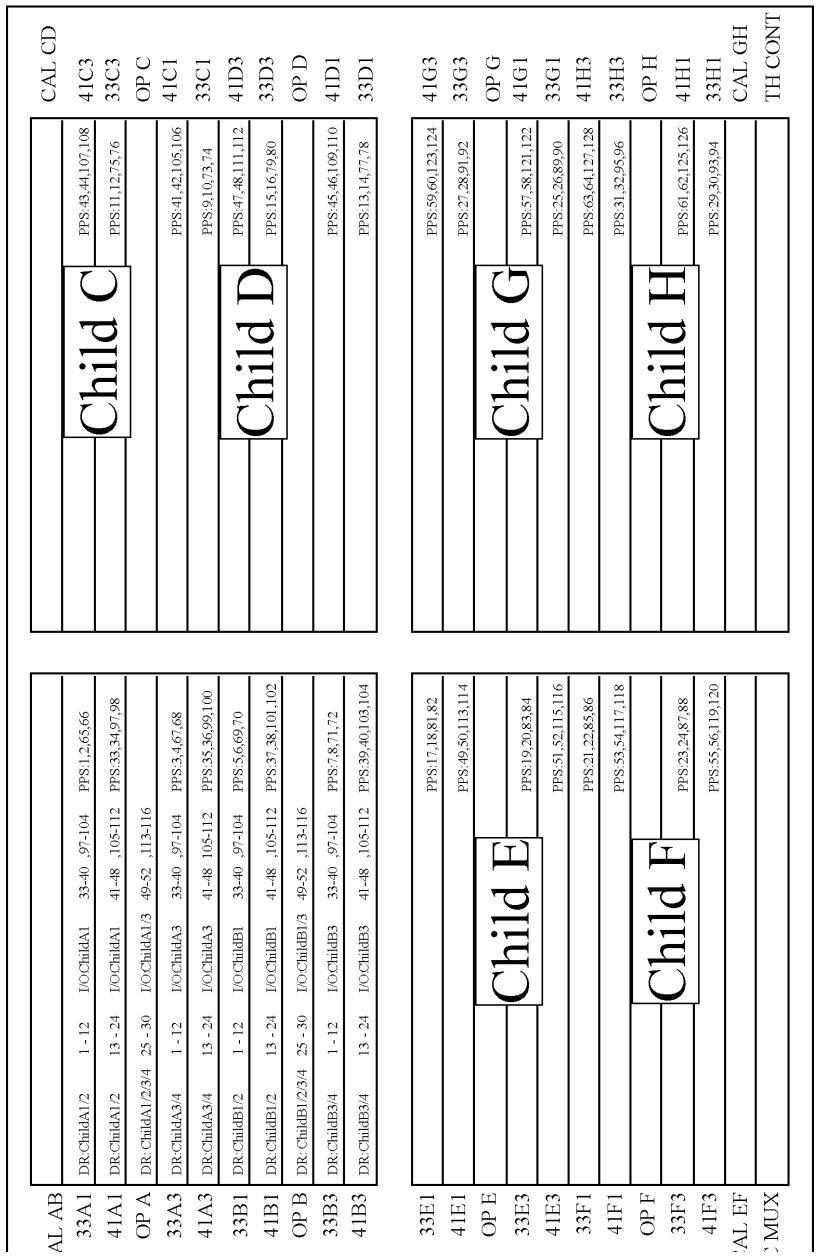

Note1: ***For the Half and QUATER station configurations, the PEs of the Child E, F, G, and H are not installed. For the QUATER station configuration only, the PEs of the Child A3 are not installed.***

The following dummy PEs are installed instead.

BGM-023129 (Dummy pin card with ZIF)

BGM-023601 (Dummy pin card without ZIF)

Note2: ***In the Half station configuration, the following board is plugged into CAL EF and CAL GH slots***

BGL-019407X02 (DUMMY CALSIG)

Note3: ***Installed Boards Specifications List***

CAL AB/CD/EF/GH:BGM-023178

PE X04:BGM-023206X04 (Installed to standard and option slots.)

PE X05:BGM-023206X05 (Installed to option slots only.)

DC MUX:BGM-023128

TH CONT:BGM-023127

6.3 Connector Location of Tester Unit

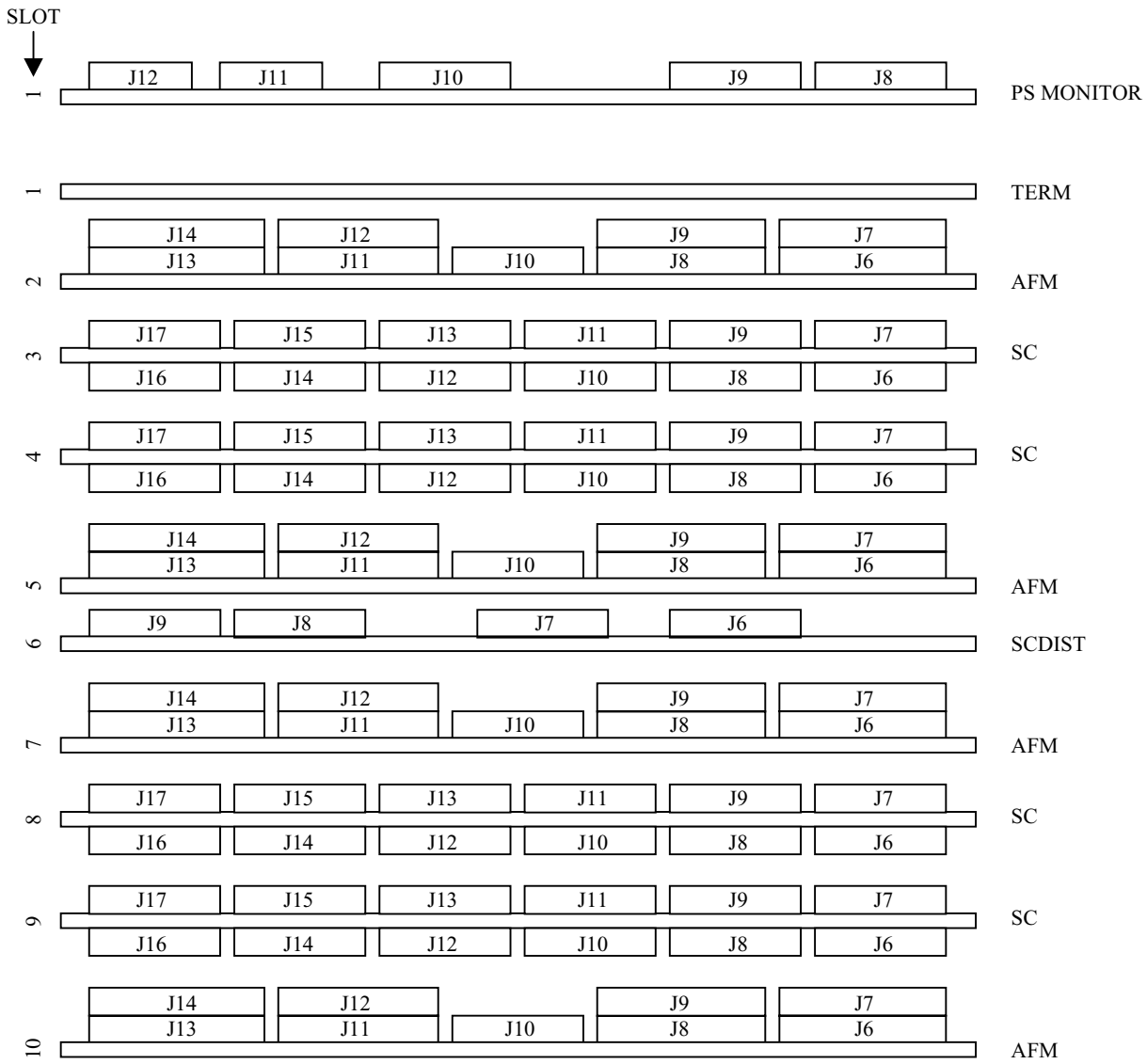

Figure 6-4 Connector Location of PS MONITOR, FTU UNIT Board Top (1/5)

[For systems with AFM installed]

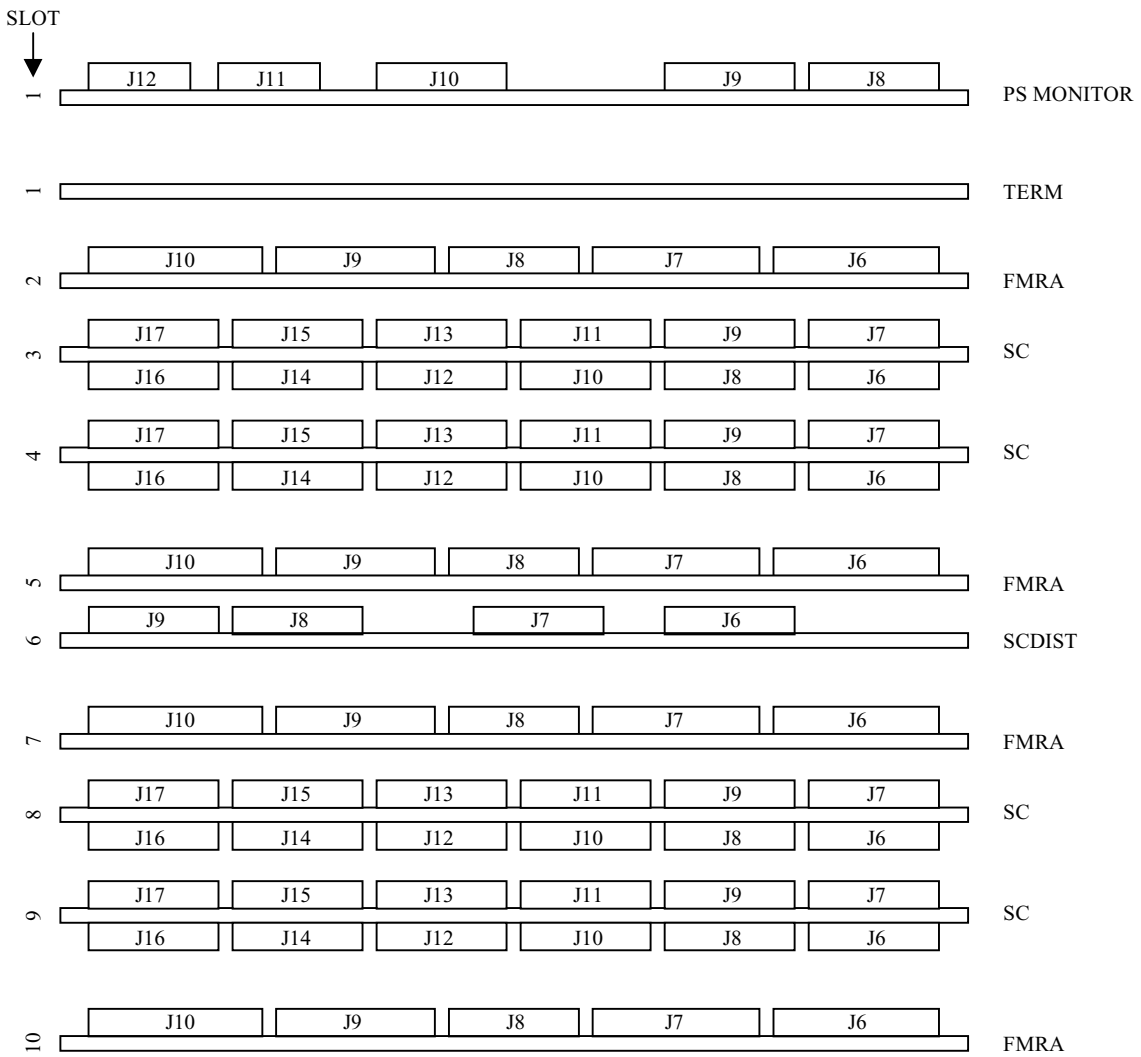

Figure 6-4Connector Location of PS MONITOR, FTU UNIT Board Top (2/5)

[For systems with MRA4 installed]

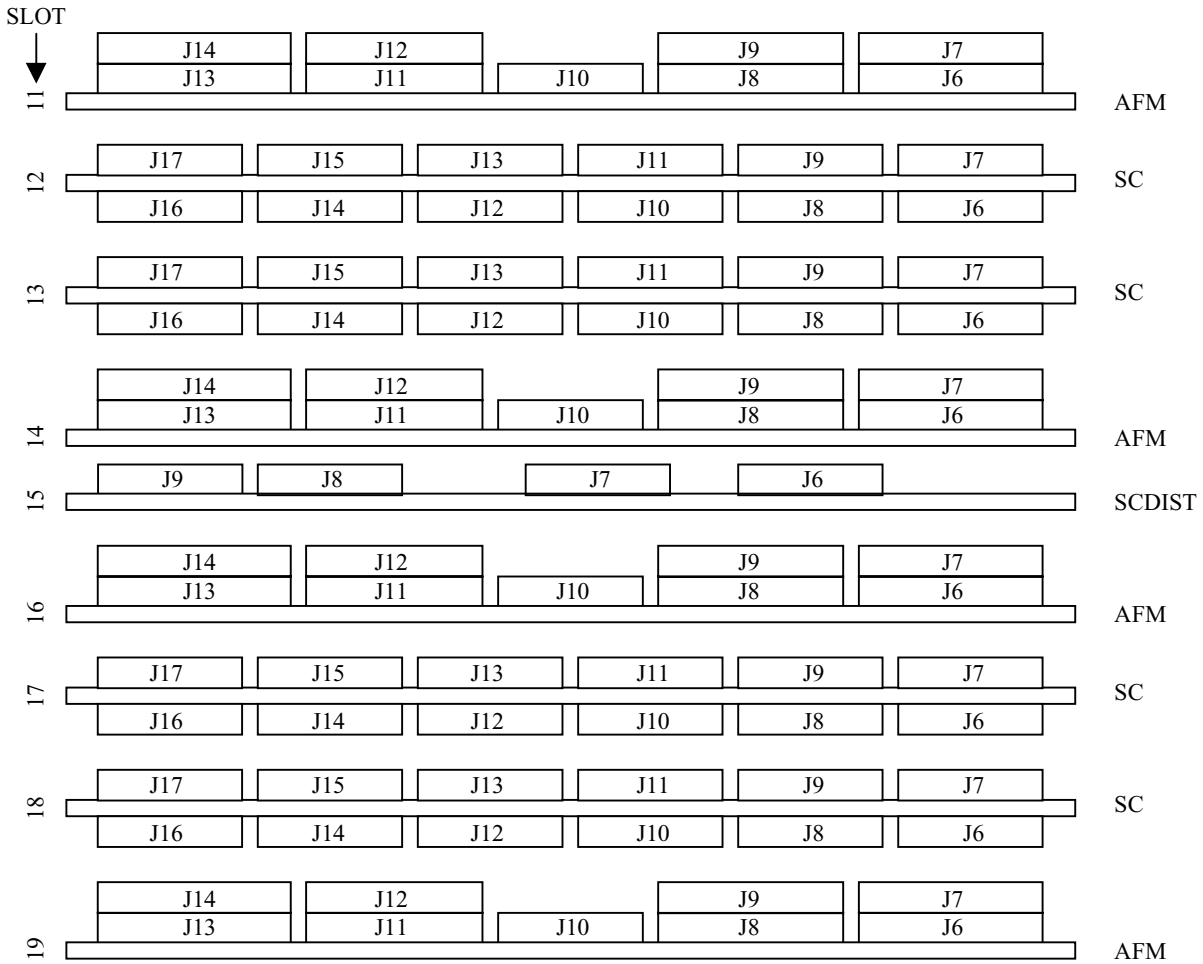

Figure 6-4 Connector Location of PS MONITOR, FTU UNIT Board Top (3/5)

[For systems with AFM installed]

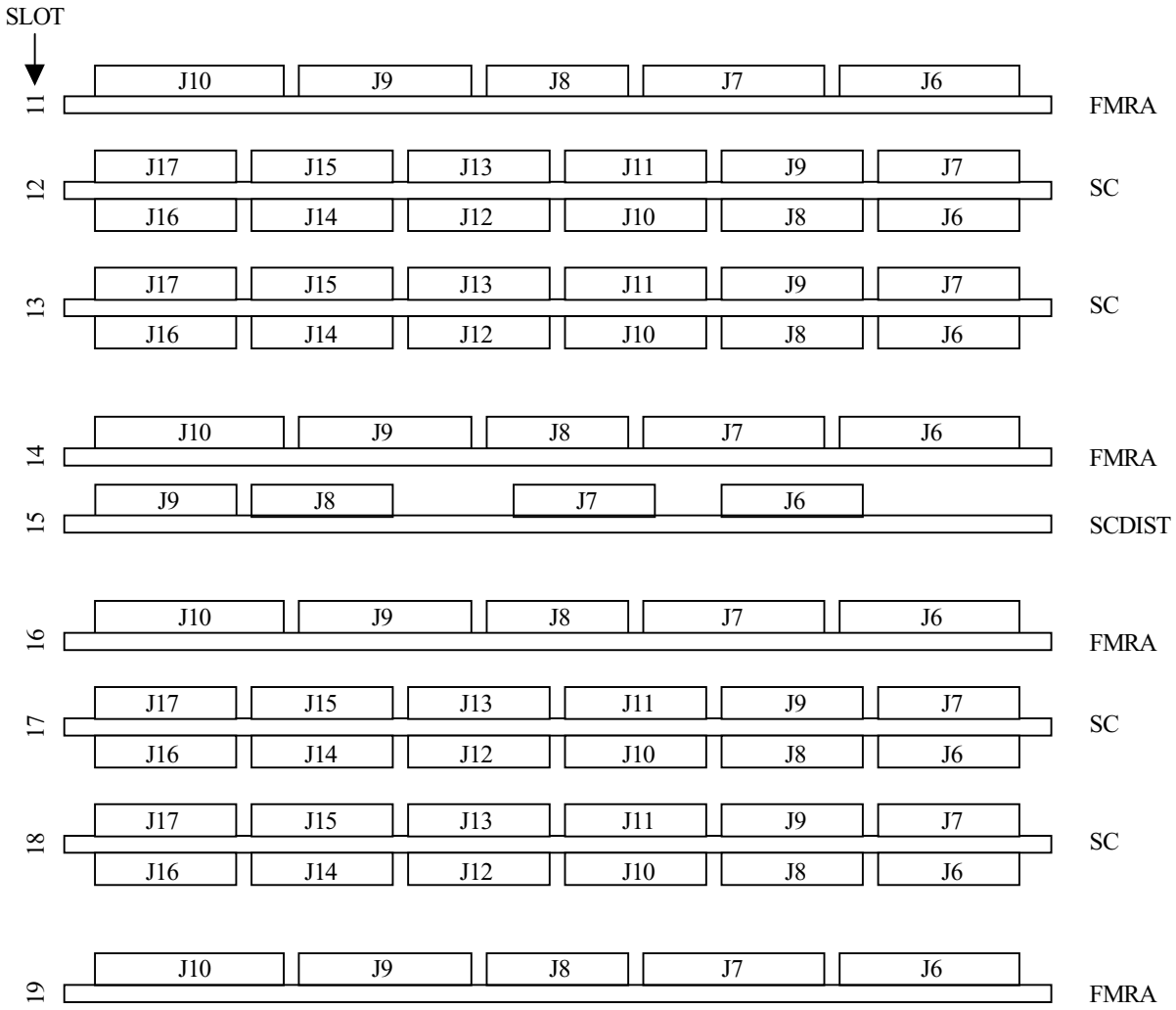

Figure 6-4 Connector Location of PS MONITOR, FTU UNIT Board Top (4/5)

[For systems with MRA4 installed]

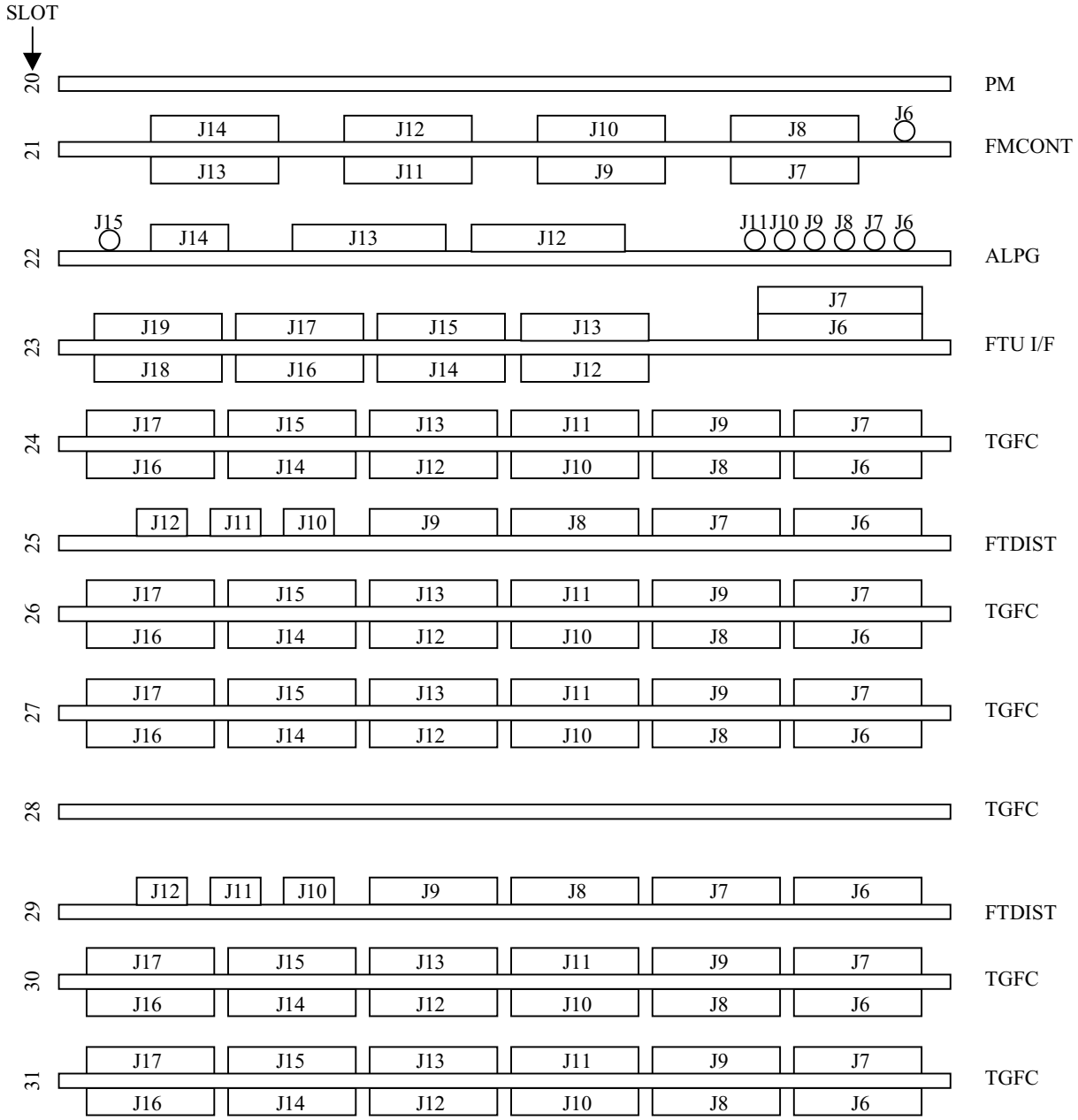

Note: No board is installed to SLOT 28.

Figure 6-4 Connector Location of PS MONITOR, FTU UNIT Board Top (5/5)

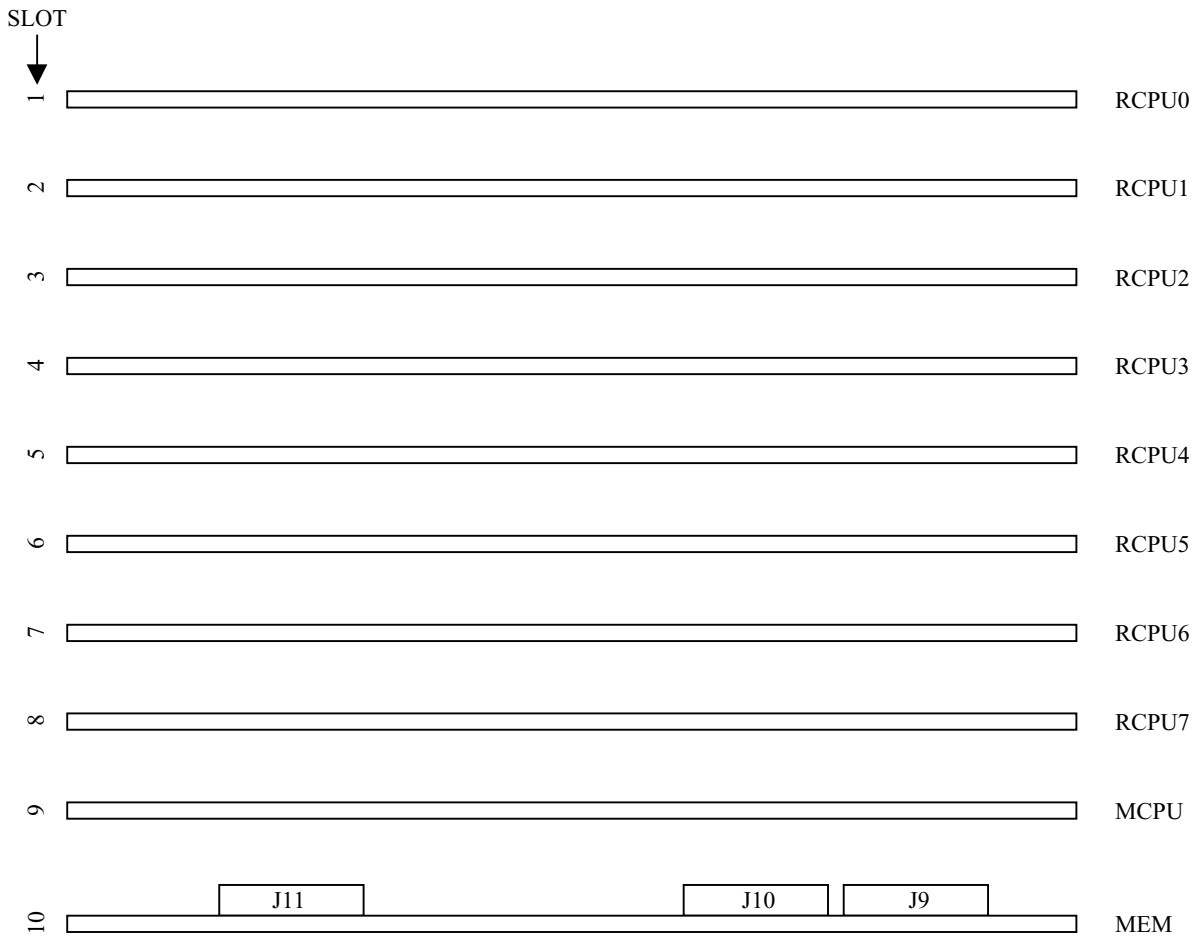

Figure 6-5 Connector Location of RCPU UNIT Board Top

[For systems with MRA4 installed]

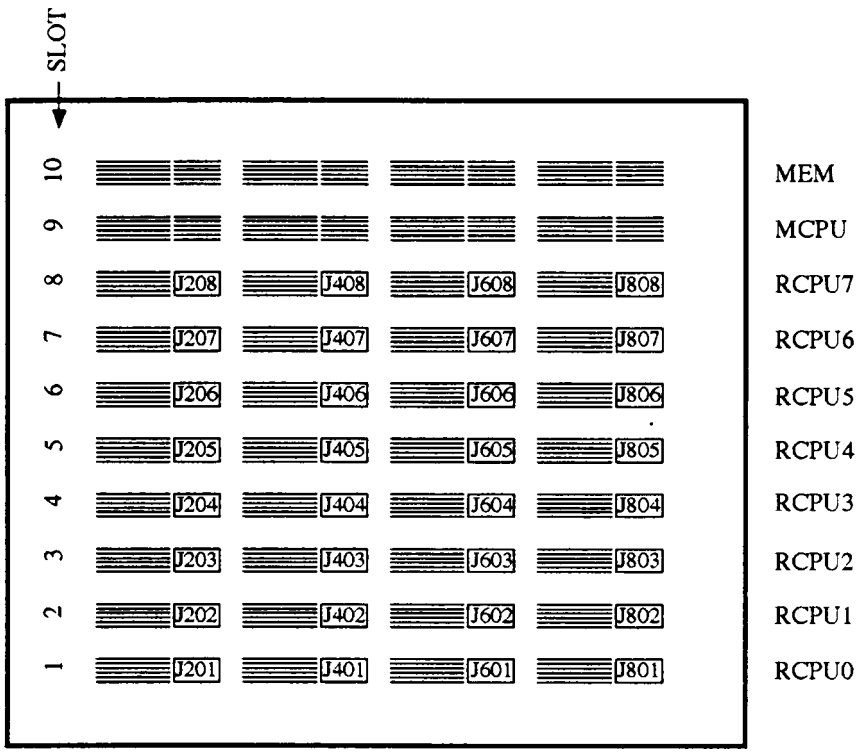

Figure 6-6 Connector Location of RCPU UNIT Board Back (For systems with MRA4 installed)

J201-208, J401-408, J601-608 and J801-808 in RCPU BWB are 5-columb 11-row connectors.

Connect the cables to the upper four rows starting from the third row and lowest four rows of the connectors, and fasten the cables using the housing locks.

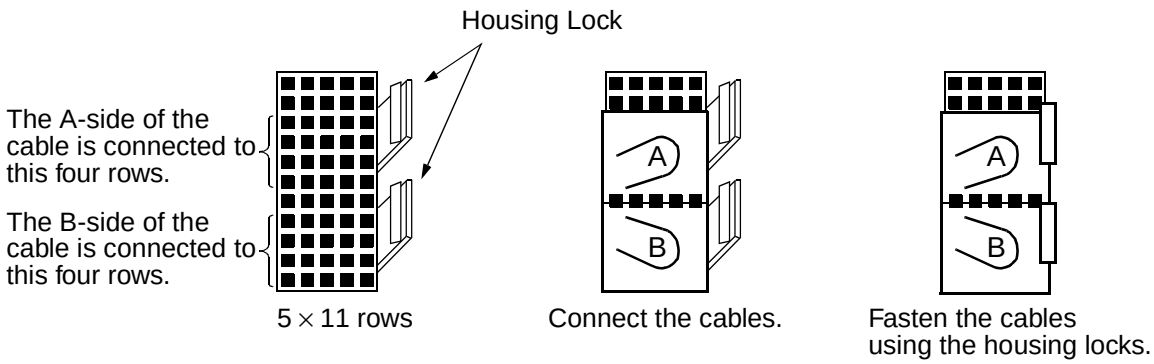

Figure 6-7 Connecting the RCPU Back Board Cable

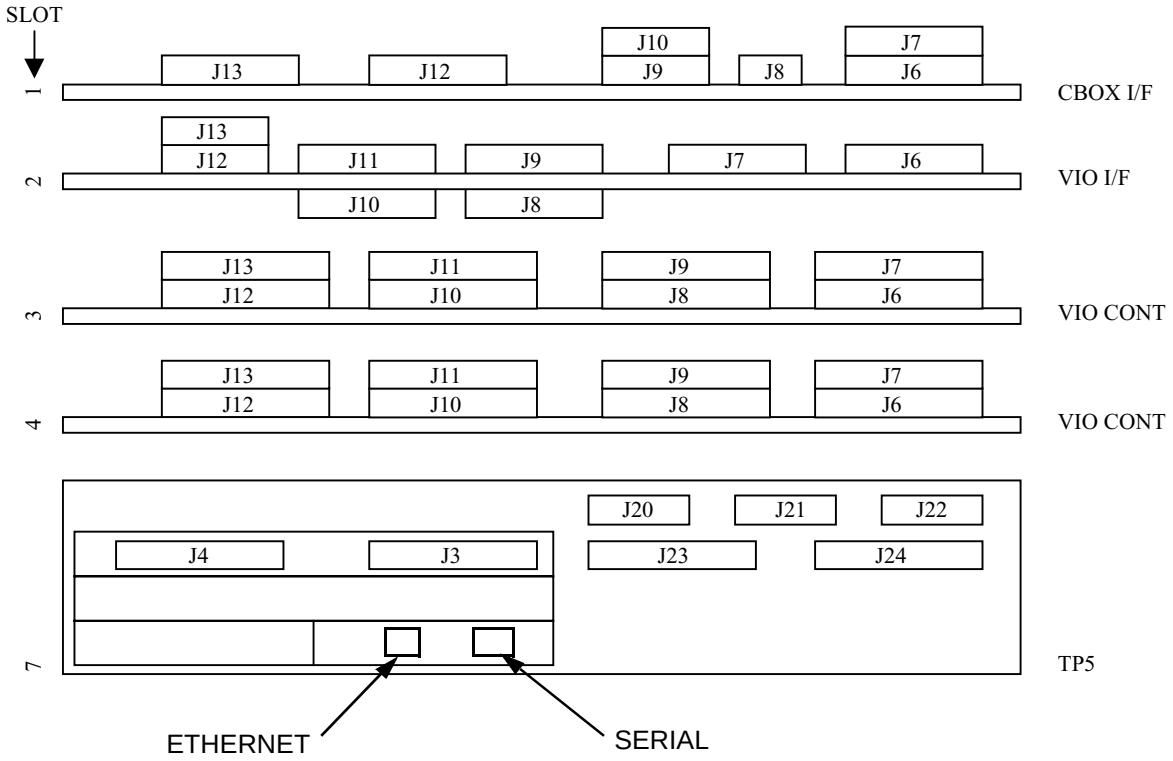

Figure 6-8 Connector Location of TP/VIO UNIT Board Top

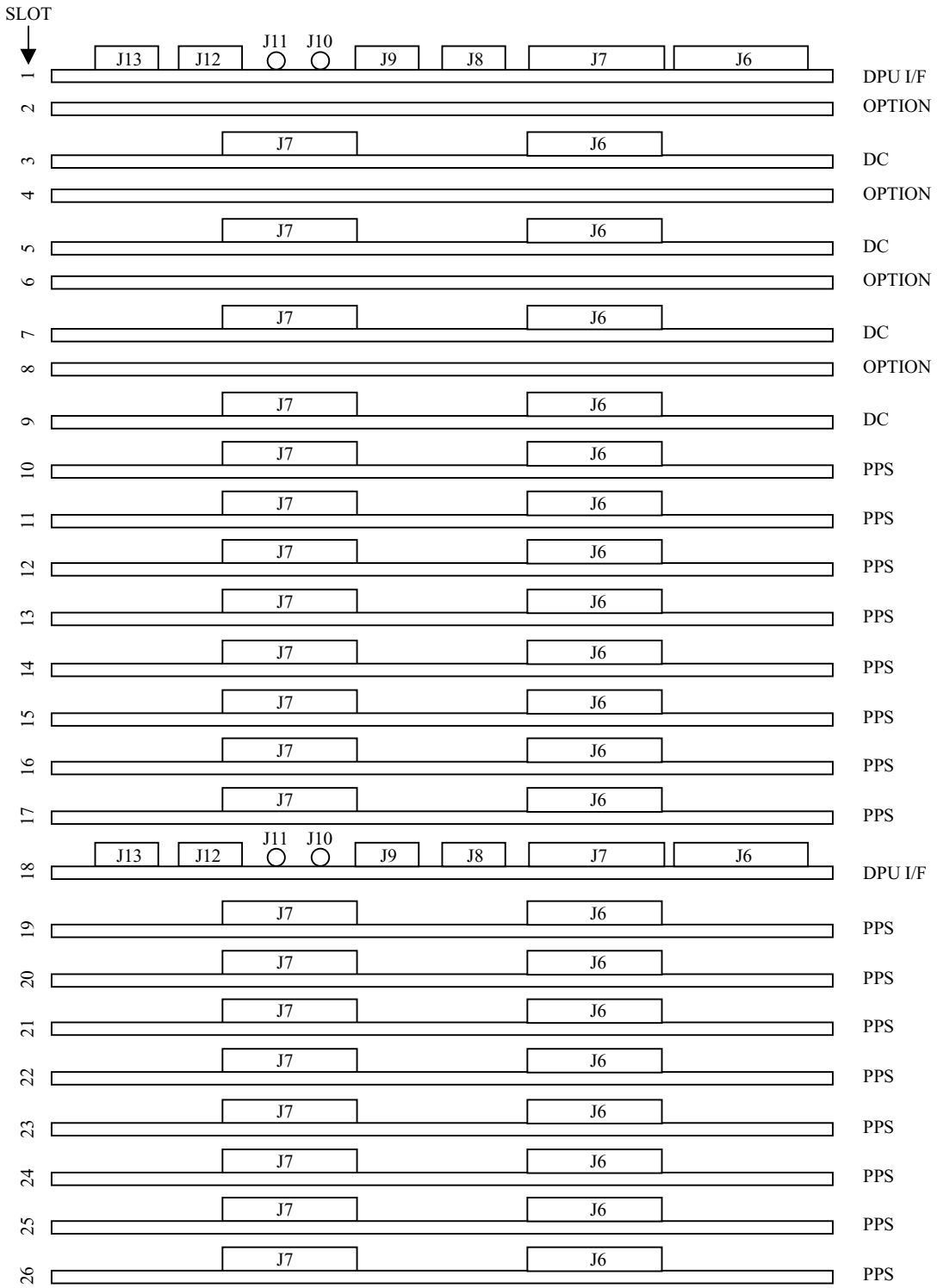

Figure 6-9 Connector Location of DPU UNIT Board Top

6.4 Cable Connection Table of Tester Unit

Table 6-6 RCPU/RCPUA2 Cable Connection(1/3)

[For systems with MRA4 installed]

2STN FULL

From	Cable name	To	Remarks
FTU-S19-J10	DCB-SS8990X02	RCPU-BWB-J208	
FTU-S19-J9	DCB-SS8990X02	RCPU-BWB-J408	
FTU-S19-J7	DCB-SS8990X02	RCPU-BWB-J608	
FTU-S19-J6	DCB-SS8990X02	RCPU-BWB-J808	
FTU-S16-J10	DCB-SS8990X02	RCPU-BWB-J207	
FTU-S16-J9	DCB-SS8990X02	RCPU-BWB-J407	
FTU-S16-J7	DCB-SS8990X02	RCPU-BWB-J607	
FTU-S16-J6	DCB-SS8990X02	RCPU-BWB-J807	
FTU-S14-J10	DCB-SS8990X02	RCPU-BWB-J206	
FTU-S14-J9	DCB-SS8990X02	RCPU-BWB-J406	
FTU-S14-J7	DCB-SS8990X02	RCPU-BWB-J606	
FTU-S14-J6	DCB-SS8990X02	RCPU-BWB-J806	
FTU-S11-J10	DCB-SS8990X02	RCPU-BWB-J205	
FTU-S11-J9	DCB-SS8990X02	RCPU-BWB-J405	
FTU-S11-J7	DCB-SS8990X02	RCPU-BWB-J605	
FTU-S11-J6	DCB-SS8990X02	RCPU-BWB-J805	
FTU-S10-J10	DCB-SS8990X02	RCPU-BWB-J204	
FTU-S10-J9	DCB-SS8990X02	RCPU-BWB-J404	
FTU-S10-J7	DCB-SS8990X02	RCPU-BWB-J604	
FTU-S10-J6	DCB-SS8990X02	RCPU-BWB-J804	
FTU-S7-J10	DCB-SS8990X02	RCPU-BWB-J203	
FTU-S7-J9	DCB-SS8990X02	RCPU-BWB-J403	
FTU-S7-J7	DCB-SS8990X02	RCPU-BWB-J603	
FTU-S7-J6	DCB-SS8990X02	RCPU-BWB-J803	
FTU-S5-J10	DCB-SS8990X02	RCPU-BWB-J202	
FTU-S5-J9	DCB-SS8990X02	RCPU-BWB-J402	
FTU-S5-J7	DCB-SS8990X02	RCPU-BWB-J602	
FTU-S5-J6	DCB-SS8990X02	RCPU-BWB-J802	
FTU-S2-J10	DCB-SS8990X02	RCPU-BWB-J201	
FTU-S2-J9	DCB-SS8990X02	RCPU-BWB-J401	
FTU-S2-J7	DCB-SS8990X02	RCPU-BWB-J601	
FTU-S2-J6	DCB-SS8990X02	RCPU-BWB-J801	

Table 6-6 RCPU/RCPUA2 Cable Connection(2/3)

[For systems with MRA4 installed]

2STN HALF

From	Cable name	To	Remarks
FTU-S19-J10	DCB-SS8990X02	RCPU-BWB-J208	
FTU-S19-J9	DCB-SS8990X02	RCPU-BWB-J408	
FTU-S19-J7	DCB-SS8990X02	RCPU-BWB-J608	
FTU-S19-J6	DCB-SS8990X02	RCPU-BWB-J808	
FTU-S16-J10	DCB-SS8990X02	RCPU-BWB-J207	
FTU-S16-J9	DCB-SS8990X02	RCPU-BWB-J407	
FTU-S16-J7	DCB-SS8990X02	RCPU-BWB-J607	
FTU-S16-J6	DCB-SS8990X02	RCPU-BWB-J807	
FTU-S10-J10	DCB-SS8990X02	RCPU-BWB-J206	
FTU-S10-J9	DCB-SS8990X02	RCPU-BWB-J406	
FTU-S10-J7	DCB-SS8990X02	RCPU-BWB-J606	
FTU-S10-J6	DCB-SS8990X02	RCPU-BWB-J806	
FTU-S7-J10	DCB-SS8990X02	RCPU-BWB-J205	
FTU-S7-J9	DCB-SS8990X02	RCPU-BWB-J405	
FTU-S7-J7	DCB-SS8990X02	RCPU-BWB-J605	
FTU-S7-J6	DCB-SS8990X02	RCPU-BWB-J805	

2STN QUARTER

From	Cable name	To	Remarks
FTU-S19-J10	DCB-SS8990X02	RCPU-BWB-J208	
FTU-S19-J9	DCB-SS8990X02	RCPU-BWB-J408	
FTU-S19-J7	DCB-SS8990X02	RCPU-BWB-J608	
FTU-S19-J6	DCB-SS8990X02	RCPU-BWB-J808	
FTU-S10-J10	DCB-SS8990X02	RCPU-BWB-J207	
FTU-S10-J9	DCB-SS8990X02	RCPU-BWB-J407	
FTU-S10-J7	DCB-SS8990X02	RCPU-BWB-J607	
FTU-S10-J6	DCB-SS8990X02	RCPU-BWB-J807	

Table 6-6 RCPU/RCPUA2 Cable Connection(3/3)

[For systems with MRA4 installed]

1STN FULL

From	Cable name	To	Remarks
FTU-S19-J10	DCB-SS8990X02	RCPU-BWB-J208	
FTU-S19-J9	DCB-SS8990X02	RCPU-BWB-J408	
FTU-S19-J7	DCB-SS8990X02	RCPU-BWB-J608	
FTU-S19-J6	DCB-SS8990X02	RCPU-BWB-J808	
FTU-S16-J10	DCB-SS8990X02	RCPU-BWB-J207	
FTU-S16-J9	DCB-SS8990X02	RCPU-BWB-J407	
FTU-S16-J7	DCB-SS8990X02	RCPU-BWB-J607	
FTU-S16-J6	DCB-SS8990X02	RCPU-BWB-J807	
FTU-S14-J10	DCB-SS8990X02	RCPU-BWB-J206	
FTU-S14-J9	DCB-SS8990X02	RCPU-BWB-J406	
FTU-S14-J7	DCB-SS8990X02	RCPU-BWB-J606	
FTU-S14-J6	DCB-SS8990X02	RCPU-BWB-J806	
FTU-S11-J10	DCB-SS8990X02	RCPU-BWB-J205	
FTU-S11-J9	DCB-SS8990X02	RCPU-BWB-J405	
FTU-S11-J7	DCB-SS8990X02	RCPU-BWB-J605	
FTU-S11-J6	DCB-SS8990X02	RCPU-BWB-J805	

1STN HALF

From	Cable Name	To	Remarks
FTU-S19-J10	DCB-SS8990X02	RCPU-BWB-J208	
FTU-S19-J9	DCB-SS8990X02	RCPU-BWB-J408	
FTU-S19-J7	DCB-SS8990X02	RCPU-BWB-J608	
FTU-S19-J6	DCB-SS8990X02	RCPU-BWB-J808	
FTU-S16-J10	DCB-SS8990X02	RCPU-BWB-J207	
FTU-S16-J9	DCB-SS8990X02	RCPU-BWB-J407	
FTU-S16-J7	DCB-SS8990X02	RCPU-BWB-J607	
FTU-S16-J6	DCB-SS8990X02	RCPU-BWB-J807	

1STN QUARTER

From	Cable Name	To	Remarks
FTU-S19-J10	DCB-SS8990X02	RCPU-BWB-J208	
FTU-S19-J9	DCB-SS8990X02	RCPU-BWB-J408	
FTU-S19-J7	DCB-SS8990X02	RCPU-BWB-J608	
FTU-S19-J6	DCB-SS8990X02	RCPU-BWB-J808	

Table 6-7 CBOX Cable Connection

Main Frame		Cable Name	Remarks
STN1	STN2		
TP/VIO-S1-J9	TP/VIO-S1-J10	DCB-RR0892X12	
MF-J9-36V MF-J9-VCC MF-J9-GND MF-J9-FGND	MF-J9-36V MF-J9-VCC MF-J9-GND MF-J9-FGND	DCB-BB1835X01E	36V 5V 0V FGND

Table 6-8 Tester Processor Cable Connection

From	Cable Name	To	Remarks
TP/VIO-S7-J22	DCB-RR4963X02	KEY BOX LED	
TP/VIO-S7-J23	DCB-SSA671X10	EWS-TP	
TP/VIO-S7-J24	DCB-RRA649X05	AC CONT J10	
TP/VIO-S7-ETHER-NET	DCB-SSA750X01	ETHERNET 2 of EWS	
TP/VIO-S7-SERIAL	DCB-SS9449X01	SERIAL B of EWS	

Table 6-9 DPU Cable Connection

From	Cable Name	To	Remarks
DPU-S1-J8	DCB-RR4395X06A	FTU-S22-J14	ALPG-DPU START
DPU-S1-J12	DCB-MS4567X03	DMM-F-INPUT H DMM-F-INPUT L DMM-F-4WH DMM-F-4WL	
DPU-S1-J13	DCB-SS5211X02	DPU-S18-J12	
DPU-S1-J9	DCB-SS0702X08A	DPU-S18-J8	
DMM-AC100V	DCB-DT7795X04	TFB-J3	DMM AC POWER
DMM-GPIB	DCB-SS1076X04	TP/VIO-S1-J13	GPIB CABLE

Table 6-10 PS MOINTOR Cable Connection

From	Cable Name	To	Remarks
PSMONI-S1-J1	DCB-SS7801X01A	MONITOR BOX	
PSMONI-S1-J4	DCB-MSA236X01	FTU,TP/VIO,RCPU BWB	POWER SENSE
PSMONI-S1-J5	DCB-MSA237X01	DPU BWB	POWER SENSE
PSMONI-S1-J6	DCB-MSA238X01	CBOX,TH FAN	POWER SENSE
PSMONI-S1-J7	DCB-MSA235X01	TP/VIO,RCPU BWB	POWER SUPPLY
PSMONI-S1-J11	DCB-MS4567X03	DMM-R-INPUT H DMM-R-INPUT L DMM-R-4WH DMM-R-4WL	

Table 6-11 FTU Cable Connection (1/3)

From	Cable Name	To	Remarks
FTU-BWB-J602-2	DCB-SS9952X01	FTU-BWB-J702-2	BWB CONNECTION 1
FTU-BWB-J603-2		FTU-BWB-J703-2	
FTU-BWB-J604-1		FTU-BWB-J704-1	
FTU-BWB-J601-2	DCB-SS9951X01A	FTU-BWB-J701-2	BWB CONNECTION 2
FTU-BWB-J602-1		FTU-BWB-J702-1	
FTU-BWB-J604-2		FTU-BWB-J704-2	
FTU-BWB-J605-1		FTU-BWB-J705-1	
FTU-BWB-J603-1	DCB-SSB293X01	FTU-BWB-J703-1	BWB CONNECTION 3
FTU-BWB-J322-1	DCB-SS9958X01A	FTU-BWB-J321-1	PG-BWB CABLE1
FTU-BWB-J422-1		FTU-BWB-J320-1	
FTU-BWB-J422-2		FTU-BWB-J319-1	
		FTU-BWB-J316-1	
		FTU-BWB-J314-1	
		FTU-BWB-J311-1	
		FTU-BWB-J310-1	
		FTU-BWB-J307-1	
		FTU-BWB-J305-1	
		FTU-BWB-J302-1	
		FTU-BWB-J318-2	
		FTU-BWB-J317-2	
		FTU-BWB-J313-2	
		FTU-BWB-J312-2	
		FTU-BWB-J309-2	
		FTU-BWB-J308-2	
		FTU-BWB-J304-2	
		FTU-BWB-J303-2	

Table 6-11 FTU Cable Connection (2/3)

From	Cable Name	To	Remarks
FTU-BWB-J322-2	DCB-SS9959X01	FTU-BWB-J318-1	PG-BWB CABLE2
FTU-BWB-J522-1		FTU-BWB-J317-1	
FTU-BWB-J522-2		FTU-BWB-J313-1	
		FTU-BWB-J312-1	
		FTU-BWB-J309-1	
		FTU-BWB-J308-1	
		FTU-BWB-J304-1	
		FTU-BWB-J303-1	
		FTU-BWB-J324-1	
		FTU-BWB-J324-2	
		FTU-BWB-J326-1	
		FTU-BWB-J326-2	
		FTU-BWB-J327-1	
		FTU-BWB-J327-2	
		FTU-BWB-J328-1	
		FTU-BWB-J328-2	
		FTU-BWB-J330-1	
		FTU-BWB-J330-2	
		FTU-BWB-J331-1	
		FTU-BWB-J331-2	
FTU-BWB-J801	DCB-RR8499X03	TPVIO-BWB-J15	TGRUN
FTU-S23 -J19	DCB-SS9971X01	FTU-S15 -J8	FTU I/F-FTDIST,SCDIST
FTU-S23 -J18		FTU-S15 -J7	
FTU-S23 -J17		FTU-S15 -J6	
FTU-S23 -J16		FTU-S6 -J8	
FTU-S23 -J15		FTU-S6 -J7	
FTU-S23 -J14		FTU-S6 -J6	
FTU-S23 -J13		FTU-S25 -J9	
FTU-S23 -J12		FTU-S25 -J8	
		FTU-S29 -J9	
		FTU-S29 -J8	

Table 6-11 FTU Cable Connection (3/3)

For systems with AFM installed

From	Cable Name	To	Remarks
FTU-S21 -J13	DCB-SSA389X02	FTU-S19 -J10	FMCONT-AFM
FTU-S21 -J14		FTU-S16 -J10	
FTU-S21 -J11		FTU-S14 -J10	
FTU-S21 -J12		FTU-S11 -J10	
FTU-S21 -J9		FTU-S10 -J10	
FTU-S21 -J10		FTU-S7 -J10	
FTU-S21 -J7		FTU-S5 -J10	
FTU-S21 -J8		FTU-S2 -J10	

For systems with MRA4 installed

From	Cable Name	To	Remarks
FTU-S21 -J13	DCB-SSA389X02	FTU-S19 -J8	FMCONT-FMRA
FTU-S21 -J14		FTU-S16 -J8	
FTU-S21 -J11		FTU-S14 -J8	
FTU-S21 -J12		FTU-S11 -J8	
FTU-S21 -J9		FTU-S10 -J8	
FTU-S21 -J10		FTU-S7 -J8	
FTU-S21 -J7		FTU-S5 -J8	
FTU-S21 -J8		FTU-S2 -J8	

Table 6-12 TH Cable Connection (1/7)

From	Cable name	To		From
		STN1	STN2	
TH-BWB-J102 - 1	DCB-SSA292X01A	FTU-S26 -J06	FTU-S26 -J12	PAT/PPS Nomal1
TH-BWB-J102 - 2		FTU-S26 -J08	FTU-S26 -J14	1-12, 33-40, 97-104
TH-BWB-J302 - 1		FTU-S26 -J10	FTU-S26 -J16	A1,A3,B1,B3
TH-BWB-J302 - 2		FTU-S18 -J13	FTU-S09 -J13	
TH-BWB-J105 - 1		FTU-S18 -J17	FTU-S09 -J17	
TH-BWB-J105 - 2		FTU-S17 -J13	FTU-S08 -J13	
TH-BWB-J305 - 1		FTU-S17 -J17	FTU-S08 -J17	
TH-BWB-J305 - 2		FTU-S10 -J07	FTU-S14 -J07	
TH-BWB-J107 - 1		FTU-S21 -J07	FTU-S25 -J07	
TH-BWB-J107 - 2				
TH-BWB-J307 - 1				
TH-BWB-J307 - 2				
TH-BWB-J110 - 1				
TH-BWB-J110 - 2				
TH-BWB-J310 - 1				
TH-BWB-J310 - 2				
TH-BWB-J112 - 1	DCB-SSA292X01A	FTU-S27 -J06	FTU-S27 -J12	PAT/PPS Nomal1
TH-BWB-J112 - 2		FTU-S27 -J08	FTU-S27 -J14	1-12, 33-40, 97-104
TH-BWB-J312 - 1		FTU-S27 -J10	FTU-S27 -J16	E1,E3,F1,F3
TH-BWB-J312 - 2		FTU-S13 -J13	FTU-S4 -J13	
TH-BWB-J115 - 1		FTU-S13 -J17	FTU-S4 -J17	
TH-BWB-J115 - 2		FTU-S12 -J13	FTU-S3 -J13	
TH-BWB-J315 - 1		FTU-S12 -J17	FTU-S3 -J17	
TH-BWB-J315 - 2		FTU-S11 -J07	FTU-S15 -J07	
TH-BWB-J117 - 1		FTU-S22 -J07	FTU-S26 -J07	
TH-BWB-J117 - 2				
TH-BWB-J317 - 1				
TH-BWB-J317 - 2				
TH-BWB-J120 - 1				
TH-BWB-J120 - 2				
TH-BWB-J320 - 1				
TH-BWB-J320 - 2				

Table 6-12 TH Cable Connection (2/7)

From	Cable name	To		From
		STN1	STN2	
TH-BWB-J103 - 1	DCB-SSA292X01A	FTU-S30 -J06	FTU-S30 -J12	PAT/PPS Nomal1
TH-BWB-J103 - 2		FTU-S30 -J08	FTU-S30 -J14	13-24, 41-48, 105-112
TH-BWB-J303 - 1		FTU-S30 -J10	FTU-S30 -J16	A1,A3,B1,B3
TH-BWB-J303 - 2		FTU-S18 -J12	FTU-S09 -J12	
TH-BWB-J106 - 1		FTU-S18 -J16	FTU-S09 -J16	
TH-BWB-J106 - 2		FTU-S17 -J12	FTU-S08 -J12	
TH-BWB-J306 - 1		FTU-S17 -J16	FTU-S08 -J16	
TH-BWB-J306 - 2		FTU-S19 -J07	FTU-S23 -J07	
TH-BWB-J108 - 1		FTU-S12 -J07	FTU-S16 -J07	
TH-BWB-J108 - 2				
TH-BWB-J308 - 1				
TH-BWB-J308 - 2				
TH-BWB-J111 - 1				
TH-BWB-J111 - 2				
TH-BWB-J311 - 1				
TH-BWB-J311 - 2				
TH-BWB-J113 - 1	DCB-SSA292X01A	FTU-S31 -J06	FTU-S31 -J12	PAT/PPS Nomal1
TH-BWB-J113 - 2		FTU-S31 -J08	FTU-S31 -J14	13-24, 41-48, 105-112
TH-BWB-J313 - 1		FTU-S31 -J10	FTU-S31 -J16	E1,E3,F1,F3
TH-BWB-J313 - 2		FTU-S13 -J12	FTU-S4 -J12	
TH-BWB-J116 - 1		FTU-S13 -J16	FTU-S4 -J16	
TH-BWB-J116 - 2		FTU-S12 -J12	FTU-S3 -J12	
TH-BWB-J316 - 1		FTU-S12 -J16	FTU-S3 -J16	
TH-BWB-J316 - 2		FTU-S20 -J07	FTU-S24 -J07	
TH-BWB-J118 - 1		FTU-S13 -J07	FTU-S17 -J07	
TH-BWB-J118 - 2				
TH-BWB-J318 - 1				
TH-BWB-J318 - 2				
TH-BWB-J121 - 1				
TH-BWB-J121 - 2				
TH-BWB-J321 - 1				
TH-BWB-J321 - 2				

Table 6-12 TH Cable Connection (3/7)

From	Cable name	To		From
		STN1	STN2	
TH-BWB-J126 - 1	DCB-SSA293X01A	FTU-S26 -J07	FTU-S26 -J13	PAT/PPS Nomal2
TH-BWB-J126 - 2		FTU-S26 -J09	FTU-S26 -J15	1-12, 33-40, 97-104
TH-BWB-J326 - 1		FTU-S26 -J11	FTU-S26 -J17	C1,C3,D1,D3
TH-BWB-J326 - 2		FTU-S18 -J07	FTU-S09 -J07	
TH-BWB-J129 - 1		FTU-S18 -J11	FTU-S09 -J11	
TH-BWB-J129 - 2		FTU-S17 -J07	FTU-S08 -J07	
TH-BWB-J329 - 1		FTU-S17 -J11	FTU-S08 -J11	
TH-BWB-J329 - 2		FTU-S10 -J06	FTU-S14 -J06	
TH-BWB-J131 - 1		FTU-S21 -J06	FTU-S25 -J06	
TH-BWB-J131 - 2				
TH-BWB-J331 - 1				
TH-BWB-J331 - 2				
TH-BWB-J134 - 1				
TH-BWB-J134 - 2				
TH-BWB-J334 - 1				
TH-BWB-J334 - 2				
TH-BWB-J136 - 1	DCB-SSA293X01A	FTU-S27 -J07	FTU-S27 -J13	PAT/PPS Nomal2
TH-BWB-J136 - 2		FTU-S27 -J09	FTU-S27 -J15	1-12, 33-40, 97-104
TH-BWB-J336 - 1		FTU-S27 -J11	FTU-S27 -J17	G1,G3,H1,H3
TH-BWB-J336 - 2		FTU-S13 -J07	FTU-S4 -J07	
TH-BWB-J139 - 1		FTU-S13 -J11	FTU-S4 -J11	
TH-BWB-J139 - 2		FTU-S12 -J07	FTU-S3 -J07	
TH-BWB-J339 - 1		FTU-S12 -J11	FTU-S3 -J11	
TH-BWB-J339 - 2		FTU-S11 -J06	FTU-S15 -J06	
TH-BWB-J141 - 1		FTU-S22 -J06	FTU-S26 -J06	
TH-BWB-J141 - 2				
TH-BWB-J341 - 1				
TH-BWB-J341 - 2				
TH-BWB-J144 - 1				
TH-BWB-J144 - 2				
TH-BWB-J344 - 1				
TH-BWB-J344 - 2				

Table 6-12 TH Cable Connection (4/7)

From	Cable name	To		From
		STN1	STN2	
TH-BWB-J125 - 1	DCB-SSA293X01A	FTU-S30 -J07	FTU-S30 -J13	PAT/PPS Nomal2
TH-BWB-J125 - 2		FTU-S30 -J09	FTU-S30 -J15	13-24, 41-48, 105-112
TH-BWB-J325 - 1		FTU-S30 -J11	FTU-S30 -J17	C1,C3,D1,D3
TH-BWB-J325 - 2		FTU-S18 -J06	FTU-S09 -J06	
TH-BWB-J128 - 1		FTU-S18 -J10	FTU-S09 -J10	
TH-BWB-J128 - 2		FTU-S17 -J06	FTU-S08 -J06	
TH-BWB-J328 - 1		FTU-S17 -J10	FTU-S08 -J10	
TH-BWB-J328 - 2		FTU-S19 -J06	FTU-S23 -J06	
TH-BWB-J130 - 1		FTU-S12 -J06	FTU-S16 -J06	
TH-BWB-J130 - 2				
TH-BWB-J330 - 1				
TH-BWB-J330 - 2				
TH-BWB-J133 - 1				
TH-BWB-J133 - 2				
TH-BWB-J333 - 1				
TH-BWB-J333 - 2				
TH-BWB-J135 - 1	DCB-SSA293X01A	FTU-S31 -J07	FTU-S31 -J13	PAT/PPS Nomal2
TH-BWB-J135 - 2		FTU-S31 -J09	FTU-S31 -J15	13-24, 41-48, 105-112
TH-BWB-J335 - 1		FTU-S31 -J11	FTU-S31 -J17	G1,G3,H1,H3
TH-BWB-J335 - 2		FTU-S13 -J06	FTU-S4 -J06	
TH-BWB-J138 - 1		FTU-S13 -J10	FTU-S4 -J10	
TH-BWB-J138 - 2		FTU-S12 -J06	FTU-S3 -J06	
TH-BWB-J338 - 1		FTU-S12 -J10	FTU-S3 -J10	
TH-BWB-J338 - 2		FTU-S20 -J06	FTU-S24 -J06	
TH-BWB-J140 - 1		FTU-S13 -J06	FTU-S17 -J06	
TH-BWB-J140 - 2				
TH-BWB-J340 - 1				
TH-BWB-J340 - 2				
TH-BWB-J143 - 1				
TH-BWB-J143 - 2				
TH-BWB-J343 - 1				
TH-BWB-J343 - 2				

Table 6-12 TH Cable Connection (5/7)

From	Cable name	To		From
		STN1	STN2	
TH-BWB-J104 - 1	DCB-SS271X01A	FTU-S24 -J06	FTU-S24 -J12	PAT/PPS Option
TH-BWB-J104 - 2		FTU-S24 -J08	FTU-S24 -J14	25-30,49-52,113-116
TH-BWB-J304 - 1		FTU-S24 -J10	FTU-S24 -J16	A1-D3
TH-BWB-J304 - 2		FTU-S18 -J09	FTU-S09 -J09	
TH-BWB-J109 - 1		FTU-S18 -J15	FTU-S09 -J15	
TH-BWB-J109 - 2		FTU-S17 -J09	FTU-S08 -J09	
TH-BWB-J309 - 1		FTU-S17 -J15	FTU-S08 -J15	
TH-BWB-J309 - 2				
TH-BWB-J127 - 1				
TH-BWB-J127 - 2				
TH-BWB-J327 - 1				
TH-BWB-J327 - 2				
TH-BWB-J132 - 1				
TH-BWB-J132 - 2				
TH-BWB-J332 - 1				
TH-BWB-J332 - 2				
TH-BWB-J114 - 1	DCB-SS271X01A	FTU-S24 -J07	FTU-S24 -J13	PAT/PPS Option
TH-BWB-J114 - 2		FTU-S24 -J09	FTU-S24 -J15	25-30,49-52,113-116
TH-BWB-J314 - 1		FTU-S24 -J11	FTU-S24 -J17	E1-H3
TH-BWB-J314 - 2		FTU-S13 -J09	FTU-S4 -J09	
TH-BWB-J119 - 1		FTU-S13 -J15	FTU-S4 -J15	
TH-BWB-J119 - 2		FTU-S12 -J09	FTU-S3 -J09	
TH-BWB-J319 - 1		FTU-S12 -J15	FTU-S3 -J15	
TH-BWB-J319 - 2				
TH-BWB-J137 - 1				
TH-BWB-J137 - 2				
TH-BWB-J337 - 1				
TH-BWB-J337 - 2				
TH-BWB-J142 - 1				
TH-BWB-J142 - 2				
TH-BWB-J342 - 1				
TH-BWB-J342 - 2				

Table 6-12 TH Cable Connection (6/7)

From	Cable name	To		From
		STN1	STN2	
TH BWB-J201-2	DCB-SSA273X01	FTU-S25-J6	FTU-S25-J7	SCAL/FCAL/CALP
TH BWB-J224-2		FTU-S15-J9	FTU-S06-J9	
TH BWB-J222-2				
TH BWB-J245-2				
TH-BWB-J702	DCB-RF8743X16	DPU-S01-J10	DPU-S01-J11	HGND
TH BWB-J123-1	DCB-SSA339X16	DPU-S03-J7	DPU-S07-J7	DC1
TH BWB-J123-2		DPU-S03-J6	DPU-S07-J6	
TH BWB-J223-1		DPU-S05-J7	DPU-S09-J7	
TH BWB-J223-2		DPU-S05-J6	DPU-S09-J6	
TH BWB-J323-1				
TH BWB-J503				
TH BWB-J504				
TH BWB-J507				
TH BWB-J508				
TH BWB-J509				
TH BWB-J512				
TH BWB-J513				
TH BWB-J516				
TH BWB-J517				
TH BWB-J518				
TH BWB-J519				
TH BWB-J520				
TH BWB-J521				
TH BWB-J522				
TH BWB-J523				
TH BWB-J524				
TH BWB-J525				
TH BWB-J526				
TH BWB-J527				
TH BWB-J528				
TH BWB-J529				
TH BWB-J530				
TH BWB-J531				
TH BWB-J532				
TH BWB-J533				
TH BWB-J534				
TH BWB-J535				
TH BWB-J536				

Table 6-12 TH Cable Connection (7/7)

From	Cable name	To		From
		STN1	STN2	
TH BWB-J246-2 TH BWB-J201-1 TH BWB-J224-1 TH BWB-J222-1 TH BWB-J245-1	DCB-SS8742X16	TP/VIO-S02-J9	TP/VIO-S02-J11	TH BUS
TH-BWB-J704	DCB-RR8758X16	TP/VIO-S02-J12	TP/VIO-S02-J13	SENSE
TH-BWB-J601 TH-BWB-J602	DCB-RR8757X02	TP/VIO-S03-J6	TP/VIO-S04-J6	VIO BUS
TH-BWB-J603 TH-BWB-J604	DCB-RR8757X02	TP/VIO-S03-J7	TP/VIO-S04-J7	VIO BUS
TH-BWB-J609 TH-BWB-J610	DCB-RR8757X02	TP/VIO-S03-J8	TP/VIO-S04-J8	VIO BUS
TH-BWB-J611 TH-BWB-J612	DCB-RR8757X02	TP/VIO-S03-J9	TP/VIO-S04-J9	VIO BUS
TH-BWB-J605 TH-BWB-J606	DCB-RR8757X02	TP/VIO-S03-J10	TP/VIO-S04-J10	VIO BUS
TH-BWB-J607 TH-BWB-J608	DCB-RR8757X02	TP/VIO-S03-J11	TP/VIO-S04-J11	VIO BUS
TH-BWB-J613 TH-BWB-J614	DCB-RR8757X02	TP/VIO-S03-J12	TP/VIO-S04-J12	VIO BUS
TH-BWB-J615 TH-BWB-J616	DCB-RR8757X02	TP/VIO-S03-J13	TP/VIO-S04-J13	VIO BUS
TH-BWB-J101-1 TH-BWB-J124-1	DCB-RS8827X17	DPU-BWB-J610 DPU-BWB-J619	DPU-BWB-J614 DPU-BWB-J623	PCON1
TH-BWB-J122-1 TH-BWB-J145-1	DCB-RS8827X17	DPU-BWB-J611 DPU-BWB-J620	DPU-BWB-J615 DPU-BWB-J624	PCON1
TH-BWB-J146-2 TH-BWB-J346-2	DCB-RS8826X17	DPU-BWB-J621 DPU-BWB-J622 DPU-BWB-J612 DPU-BWB-J613	DPU-BWB-J625 DPU-BWB-J626 DPU-BWB-J616 DPU-BWB-J617	PCON2

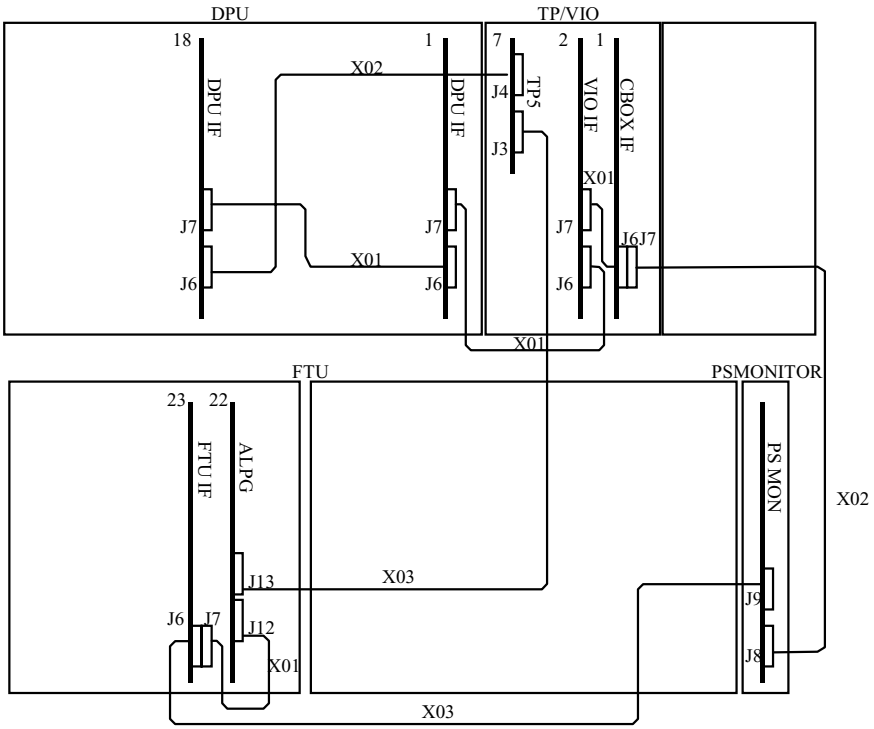

Figure 6-10 Tester Bus Connection Diagram(1/2)

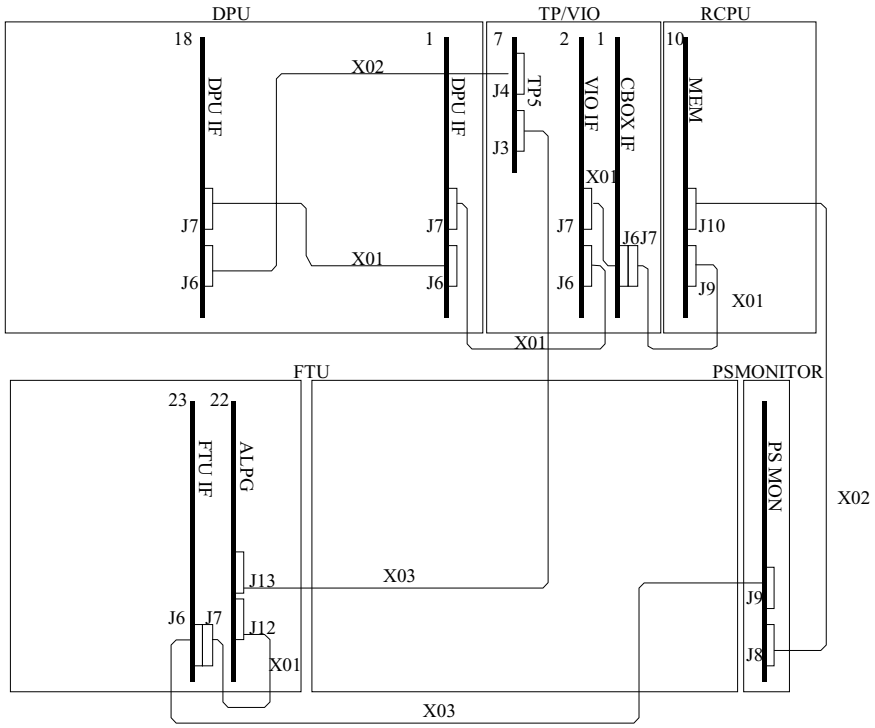

Figure 6-10 Tester Bus Connection Diagram(2/2)
[For systems with MRA4 installed]

Table 6-13 Tester Bus Cable Connection (1/2)

From	Cable Name	To	Remarks
TP/VIO-S07-J3	DCB-RR0235X03	FTU-S22-J13	TP5-ALPG
FTU-S22-J12	DCB-RR0235X01	FTU-S23-J7	ALPG-FTU I/F
FTU-S23-J6	DCB-RR0235X03	PS MONI-S01-J9	FTU I/F-PS MONITOR
PS MONI-S01-J8	DCB-RR0235X02	TP/VIO-S01-J7	PS MONITOR-CBOX I/F
TP/VIO-S01-J6	DCB-RR0235X01	TP/VIO-S02-J7	CBOX I/F-VIO I/F
TP/VIO-S02-J6	DCB-RR0235X01	DPU-S01-J7	VIO I/F-DPU I/F
DPU-S01-J6	DCB-RR0235X01	DPU-S18-J7	DPU I/F-DPU I/F (Note)
DPU-S18-J6	DCB-RR0235X02	TP/VIO-S07-J4	DPU I/F-TP5

Note: ***When DPU option (H3-1339) is not installed, the tester bus cable between DPU I/Fs is not necessary.***

Table 6-13 Tester Bus Cable Connection (2/2)

[For systems with MRA4 installed]

From	Cable Name	To	Remarks
TP/VIO-S07-J3	DCB-RR0235X03	FTU-S22-J13	TP5-ALPG
FTU-S22-J12	DCB-RR0235X01	FTU-S23-J7	ALPG-FTU I/F
FTU-S23-J6	DCB-RR0235X03	PS MONI-S01-J9	FTU I/F-PS MONITOR
PS MONI-S01-J8	DCB-RR0235X02	RCPU-S10-J10	PS MONITOR-MEM
RCPU-S10-J9	DCB-RR0235X01	TP/VIO-S01-J7	MEM-CBOX I/F
TP/VIO-S01-J6	DCB-RR0235X01	TP/VIO-S02-J7	CBOX I/F-VIO I/F
TP/VIO-S02-J6	DCB-RR0235X01	DPU-S01-J7	VIO I/F-DPU I/F
DPU-S01-J6	DCB-RR0235X01	DPU-S18-J7	DPU I/F-DPU I/F (Note)
DPU-S18-J6	DCB-RR0235X02	TP/VIO-S07-J4	DPU I/F-TP5

Note: ***When DPU option (H3-1339) is not installed, the tester bus cable between DPU I/Fs is not necessary.***

6.5 Safety Unit Mounting Position

(1) Mainframe

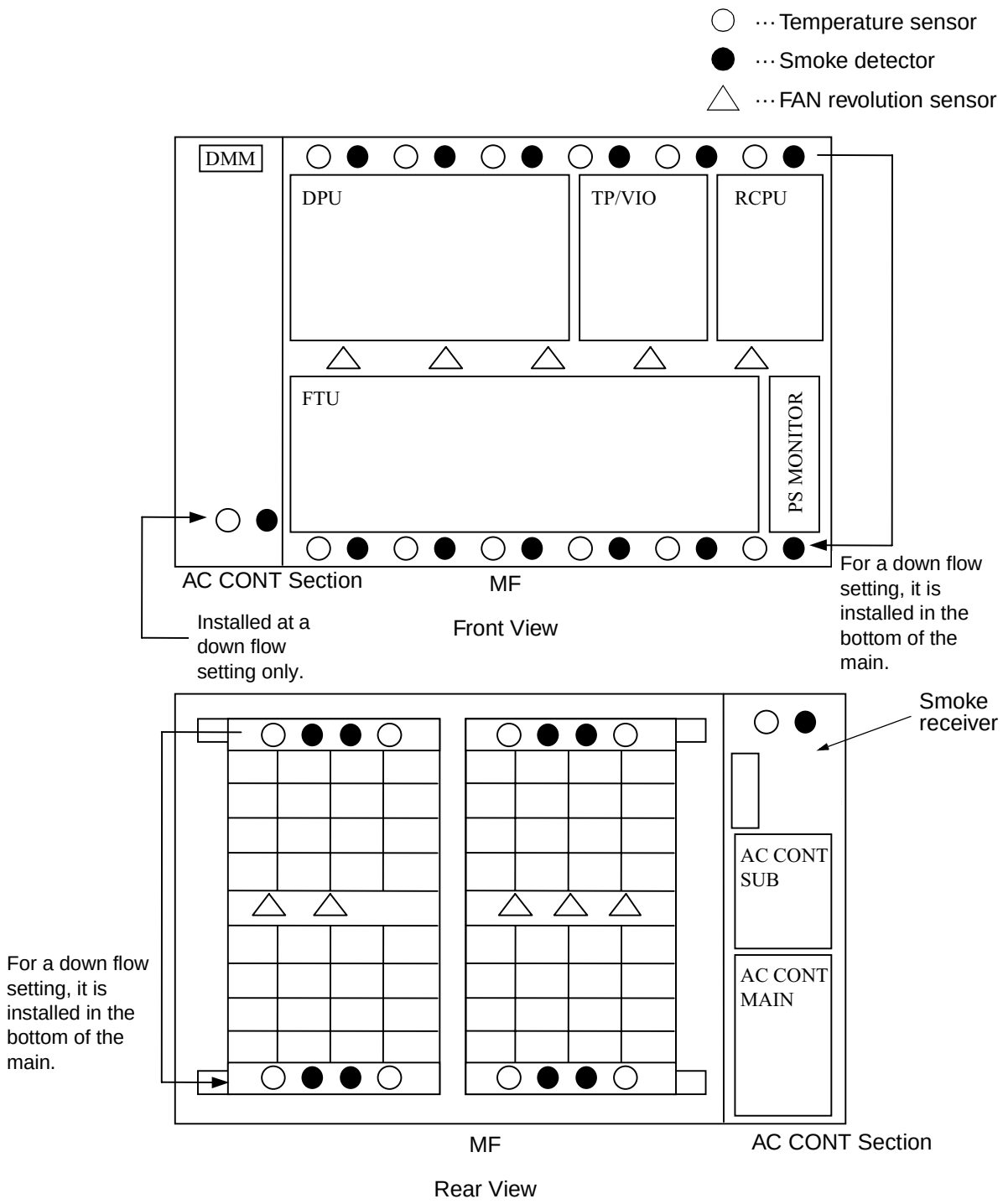

Figure 6-11 Safety Unit Mounting Position

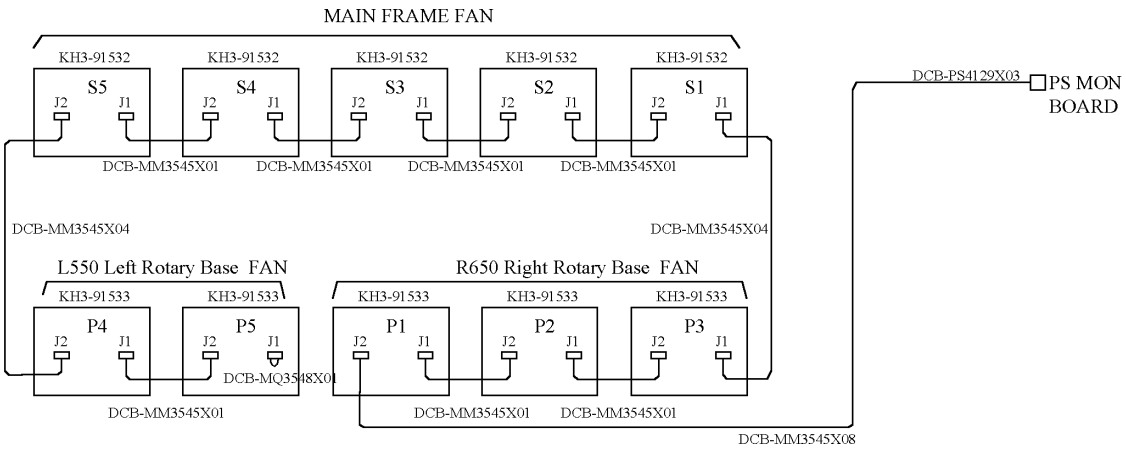

Figure 6-12 Tester Section Smoke Detector Diagram (FAN Sensor)
(When the transformer unit code is KH3-71150)

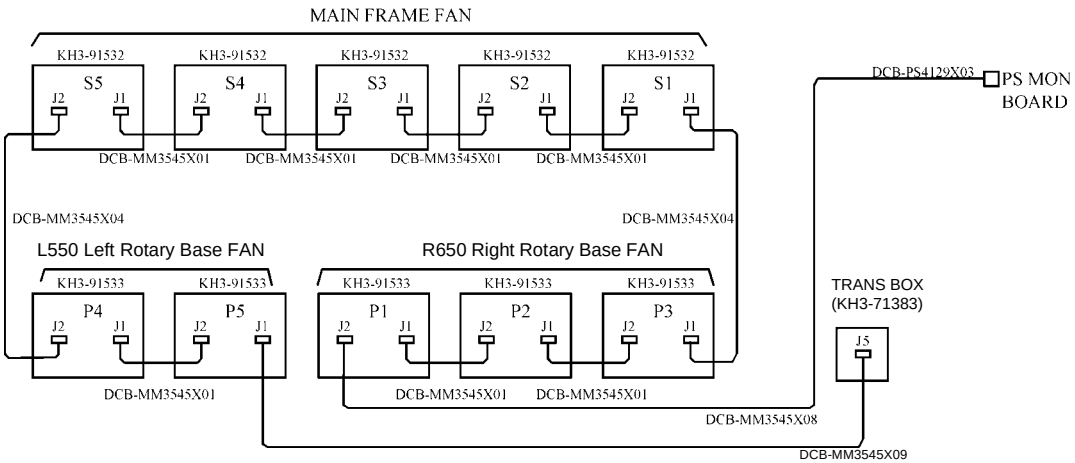

Figure 6-13 Tester Section Smoke Detector Diagram (FAN Sensor)
(When the transformer unit code is KH3-71383)

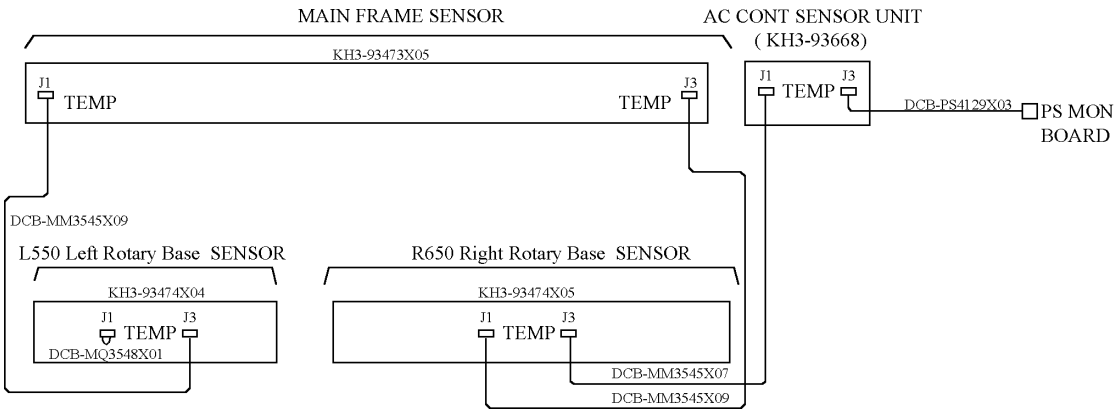

Figure 6-14 Tester Section Smoke Detector Diagram (TEMP Sensor)

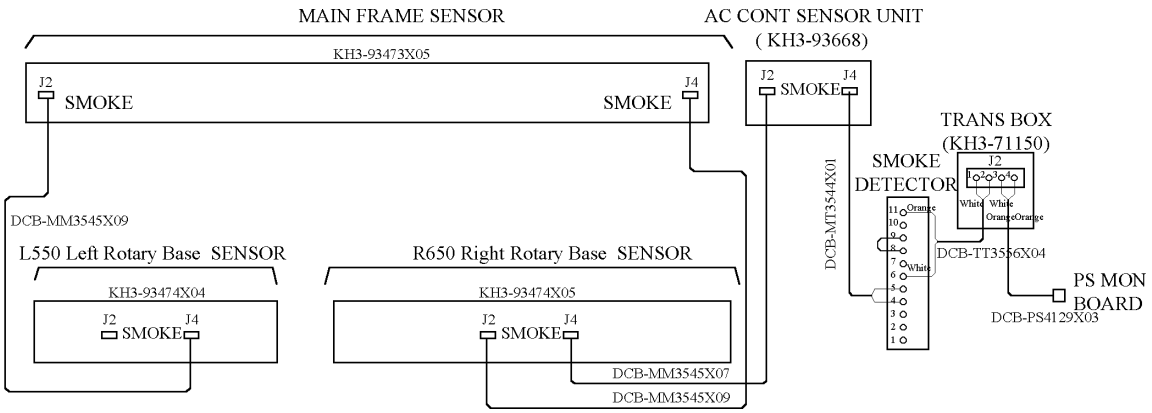

Figure 6-15 Tester Section Smoke Detector Diagram (SMOKE Sensor)
(When the transformer unit code is KH3-71150)

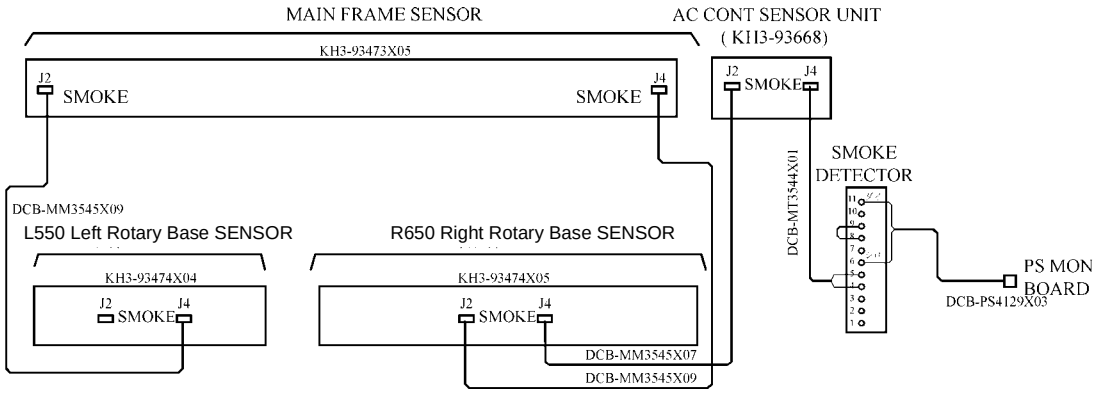

Figure 6-16 Tester Section Smoke Detector Diagram (SMOKE Sensor)
(When the transformer unit code is KH3-71383)

(2) Test head

○ ··· Temperature sensor
△ ··· FAN revolution sensor

Note: ***The temperature sensor and FAN revolution sensor locations depend on the air flow. (The above figure shows the case when the FAN is located in the bottom of the test head.)***

Figure 6-17 Safety Unit Position(Test Head)

6.6 Center of Gravity and Mainframe Diagrams

(1) Center of gravity of the mainframe

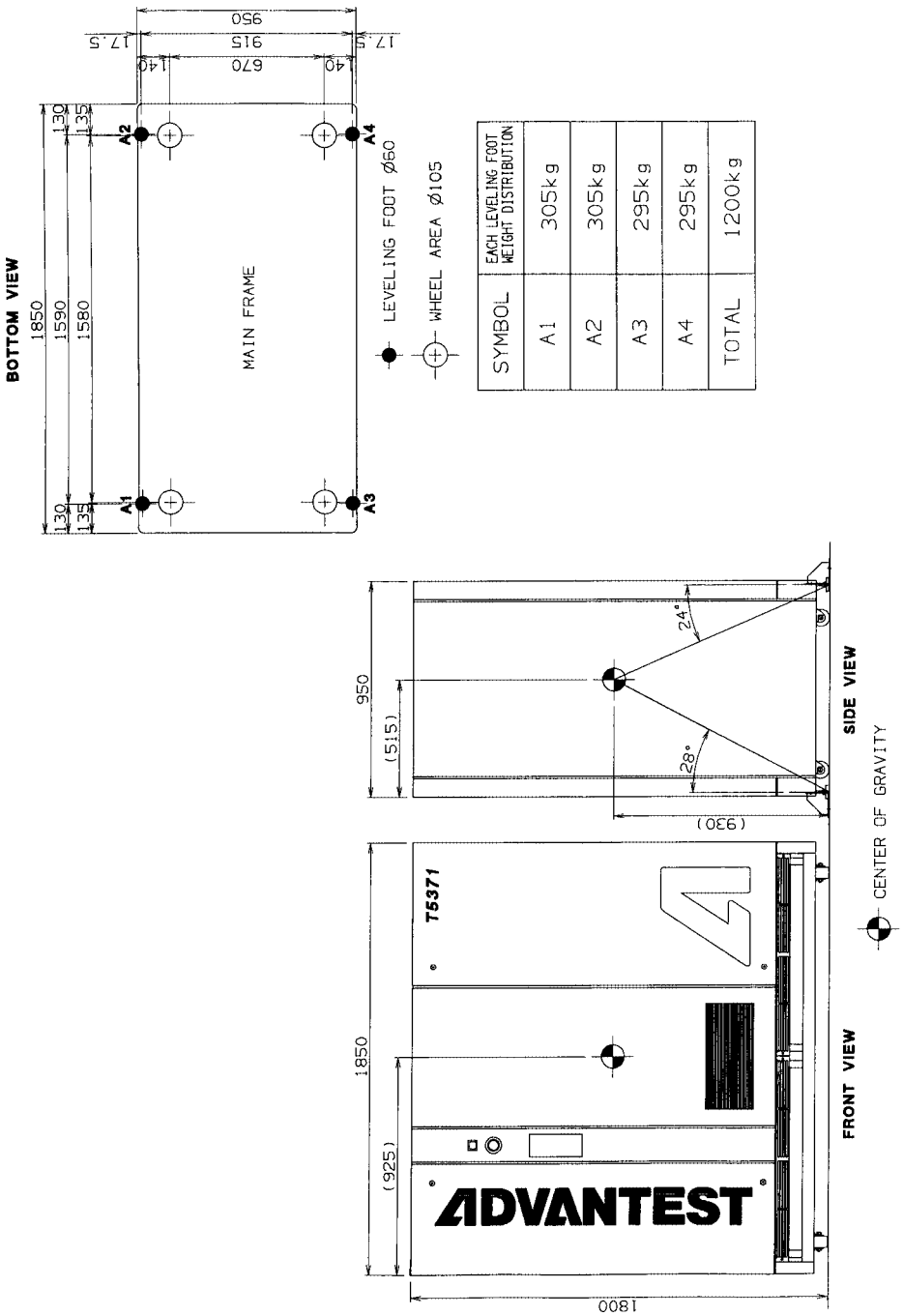

SYMBOL	EACH LEVELING FOOT WEIGHT DISTRIBUTION
A1	305kg
A2	305kg
A3	295kg
A4	295kg
TOTAL	1200kg

Figure 6-18 Center of Gravity of the Mainframe

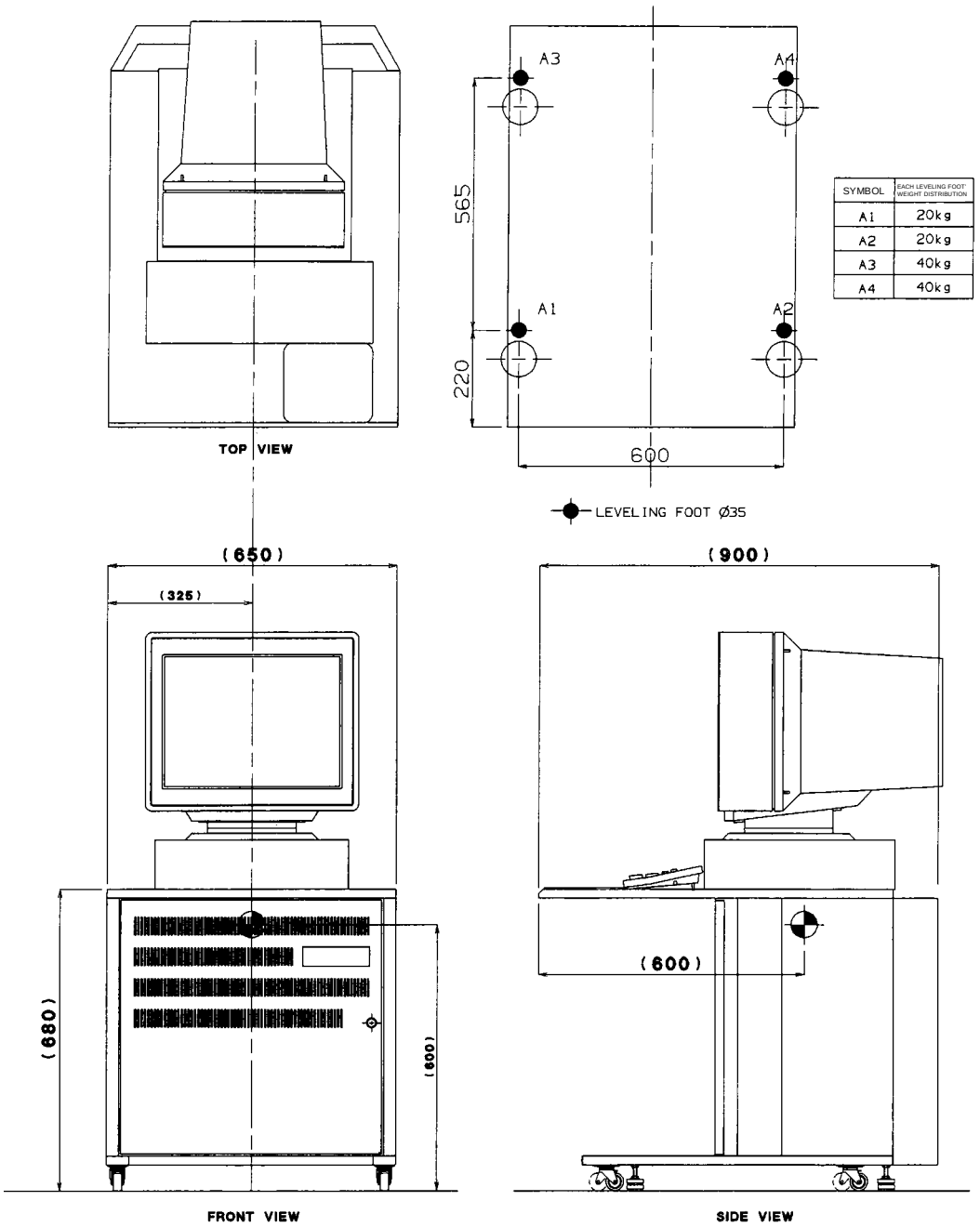

Position of EWS gravity center

Figure 6-19 Engineering Workstation Frame

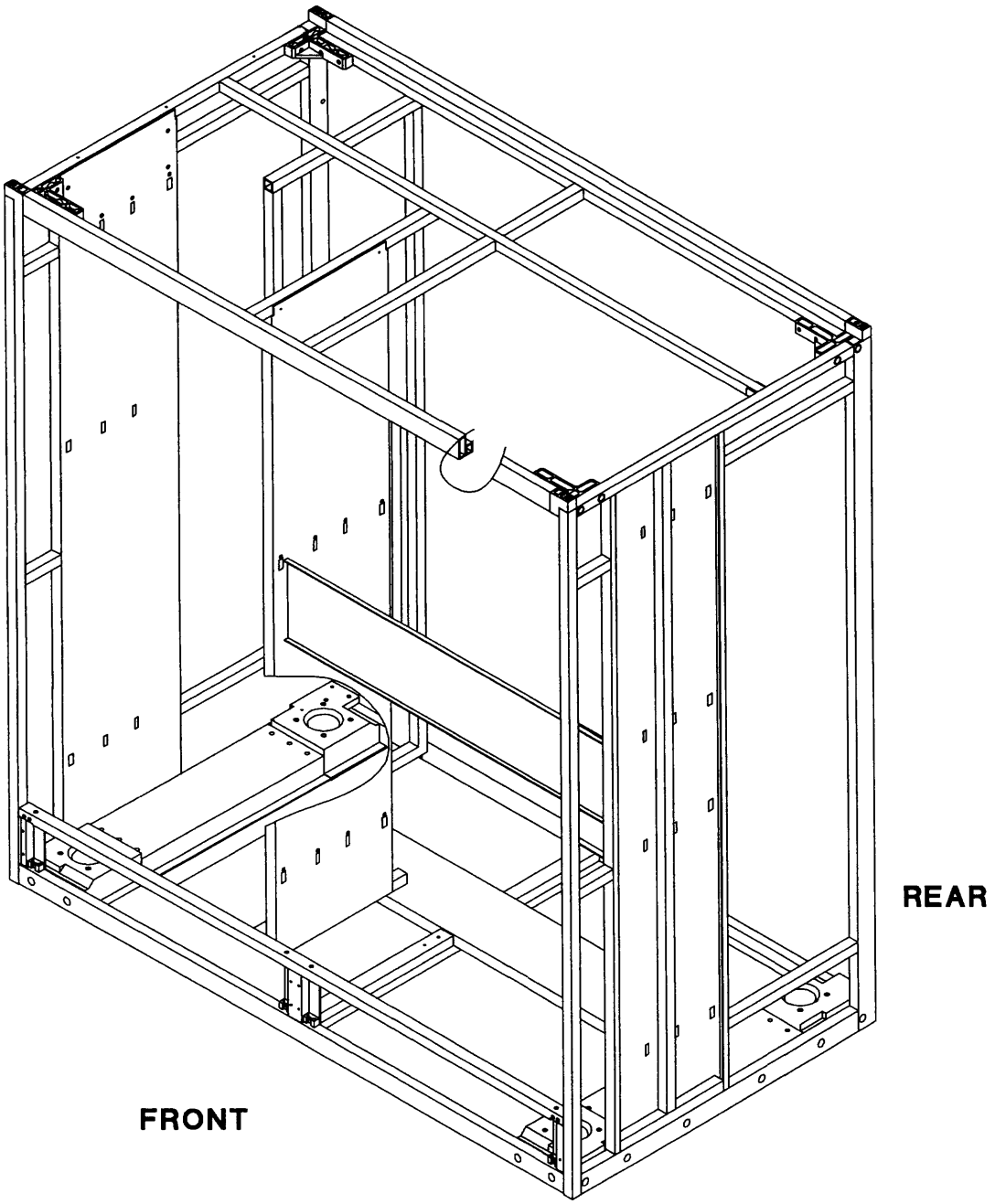

Figure 6-20 Structure of the Mainframe

7 TEST HEAD CONNECTOR PIN LAYOUT

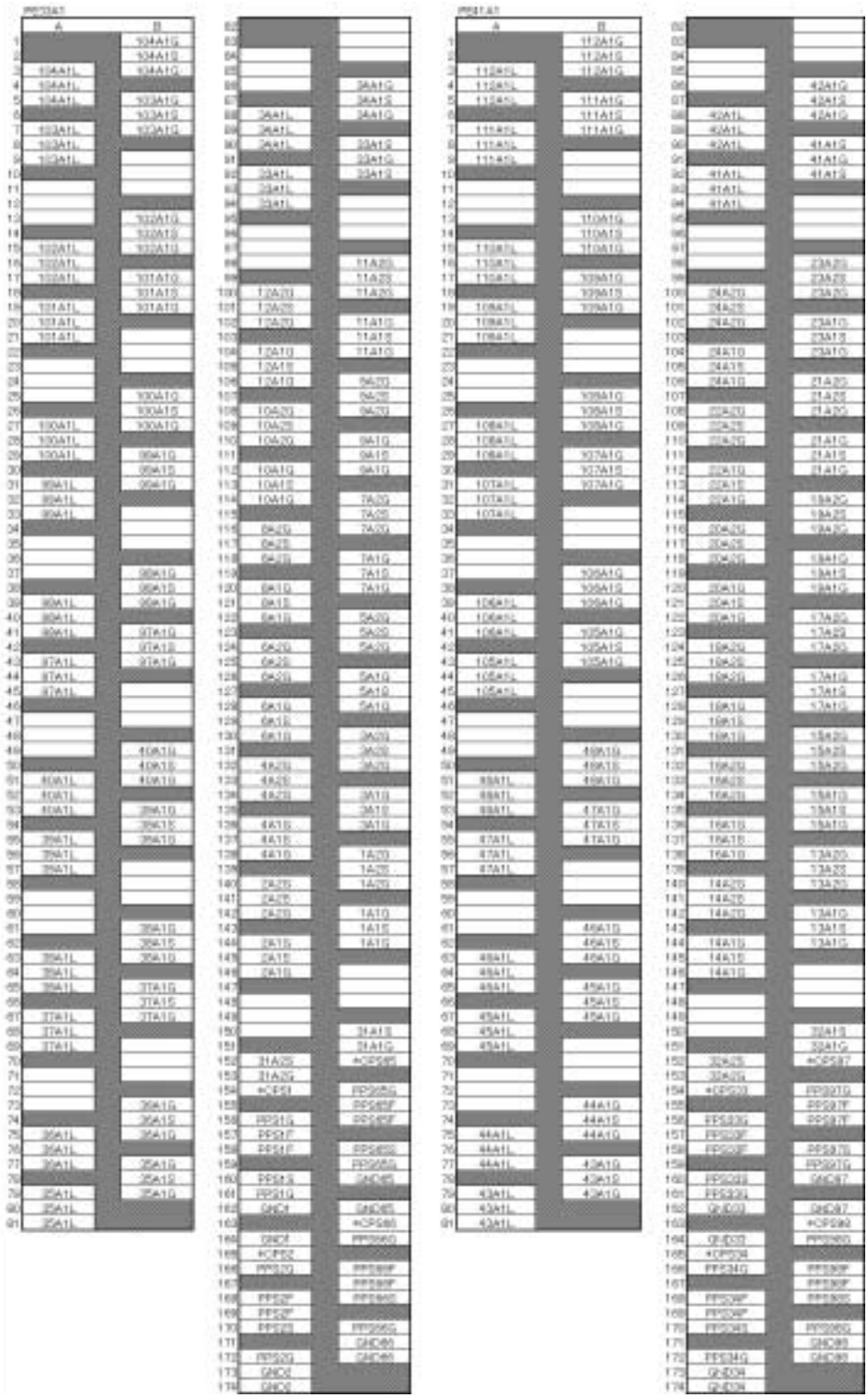

Figure 7-1 Connector Pin Layout on Pin Card (PE33A1, PE41A1)

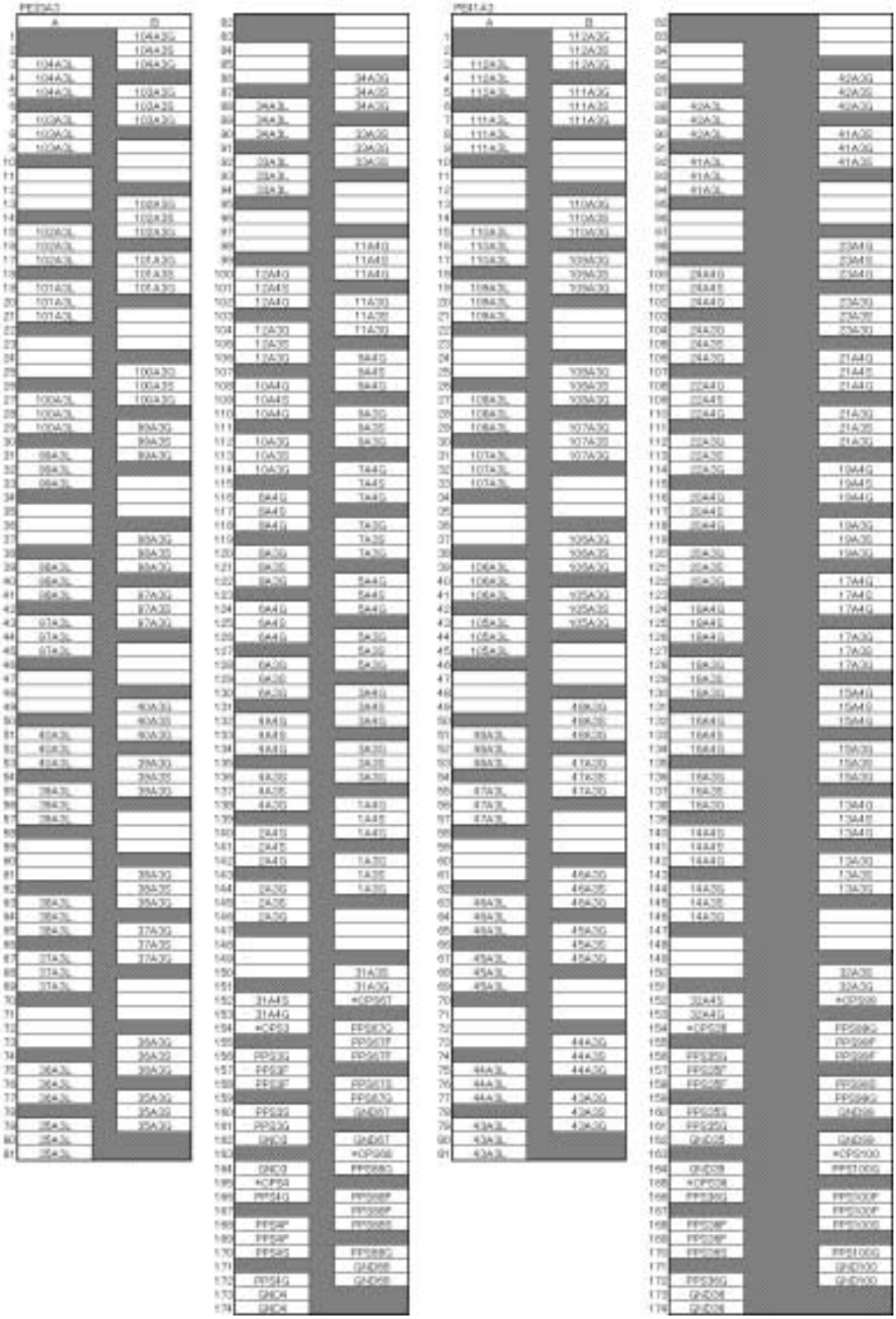

Figure 7-2 Connector Pin Layout on Pin Card (PE33A3, PE41A3)

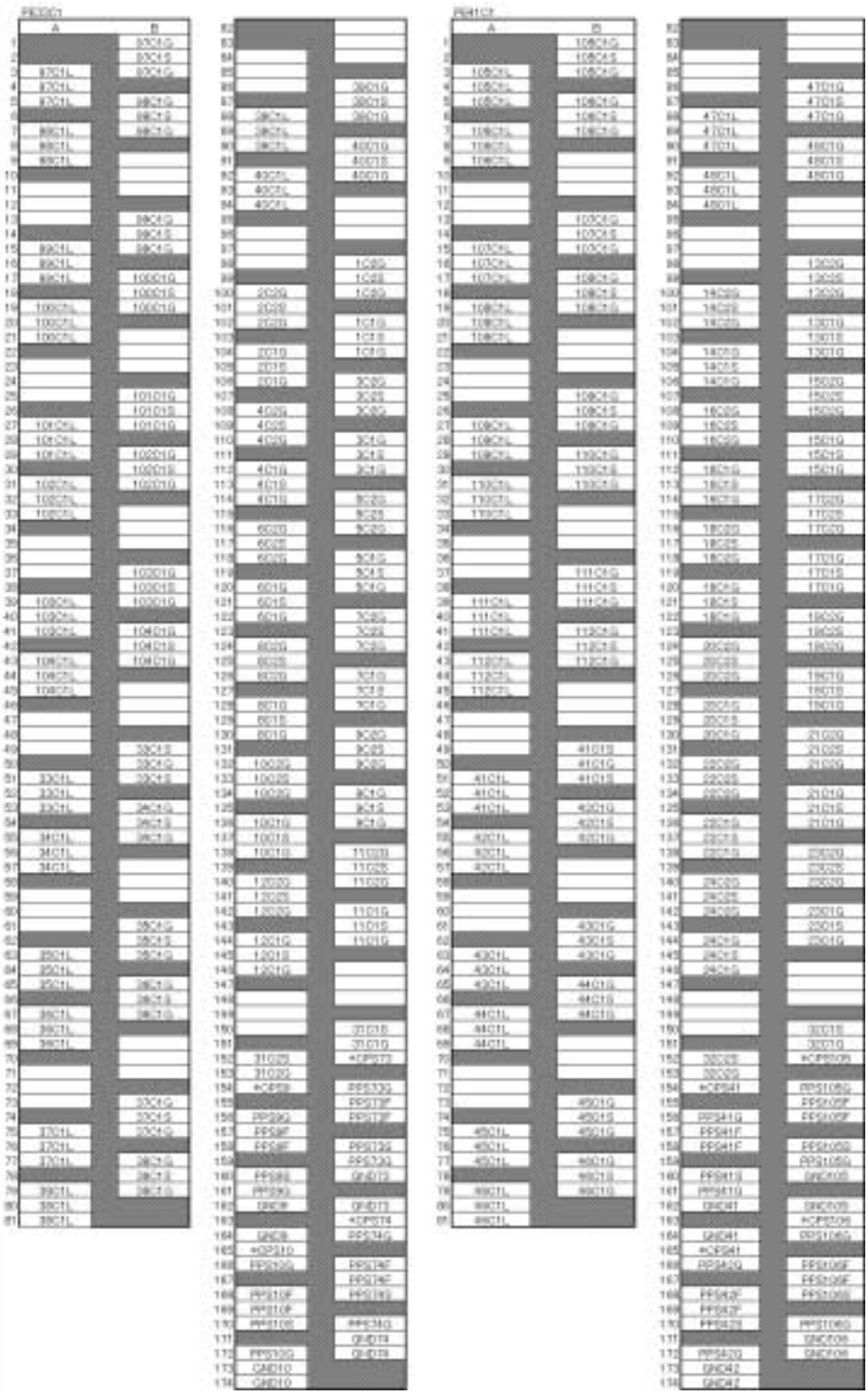

Figure 7-3 Connector Pin Layout on Pin Card (PE33C1, PE41C1)

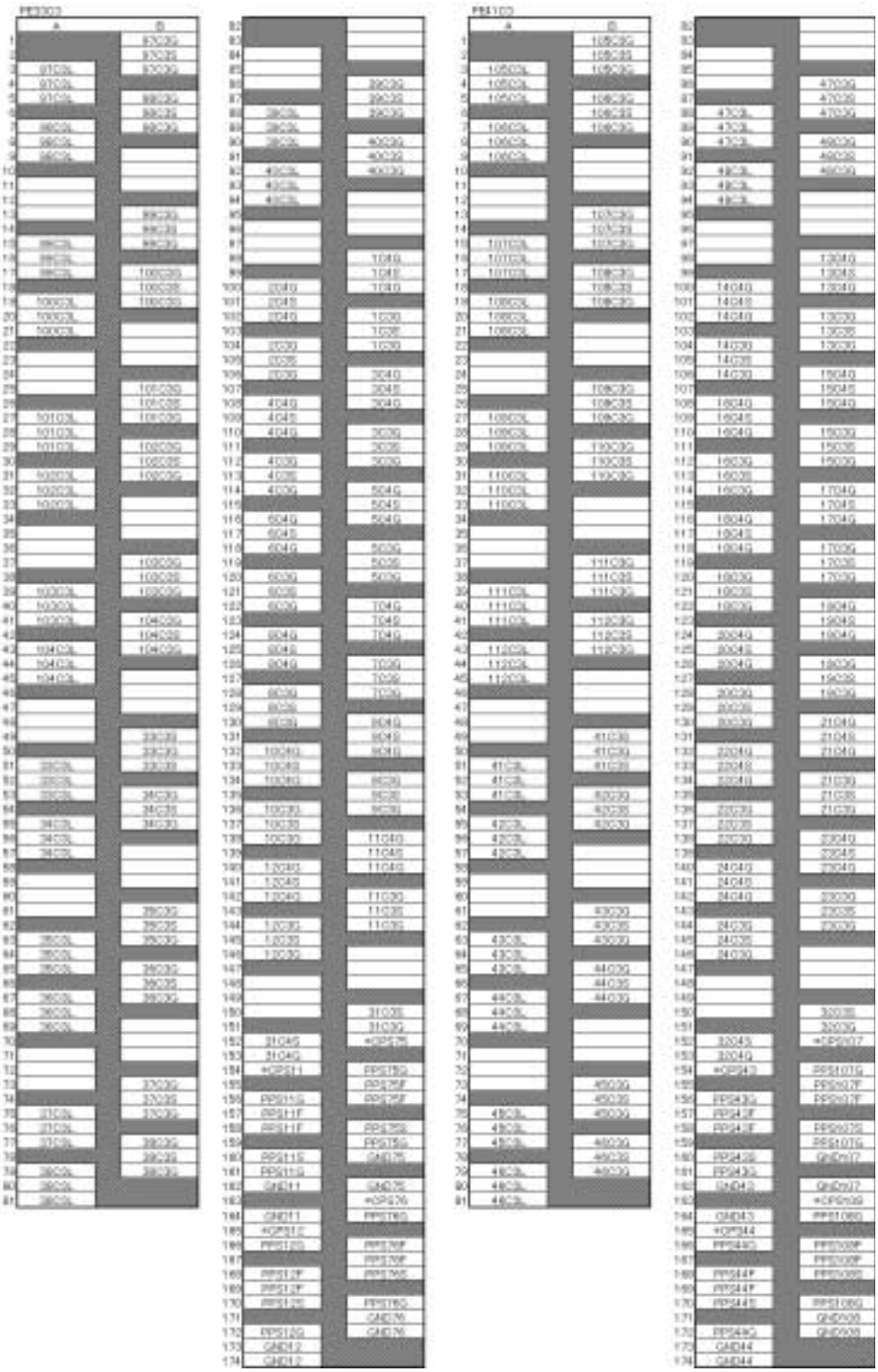

Figure 7-4 Connector Pin Layout on Pin Card (PE33C3, PE41C3)

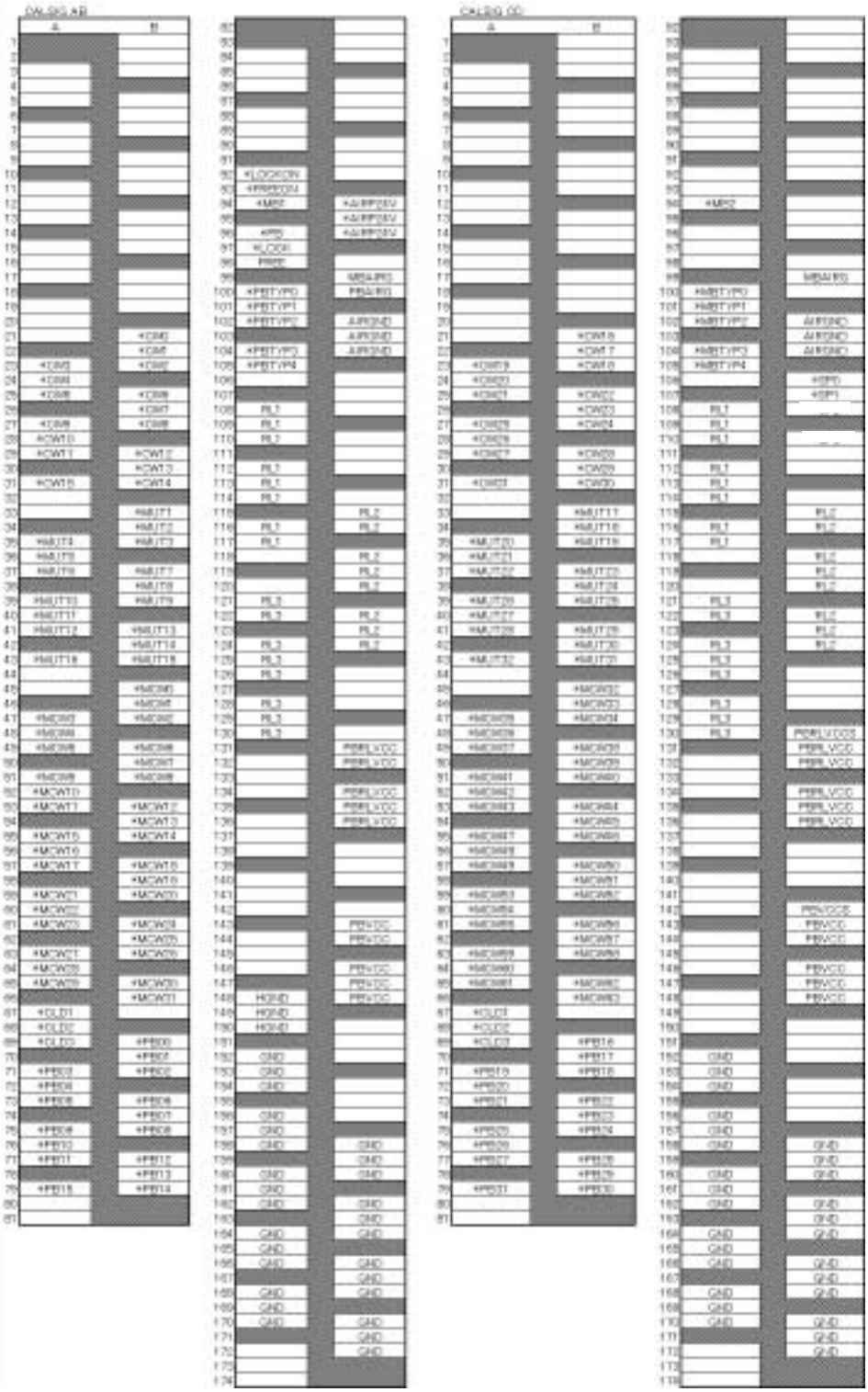

Figure 7-5 Connector Pin Layout on Cal & Sig Board (AB side/CD side)

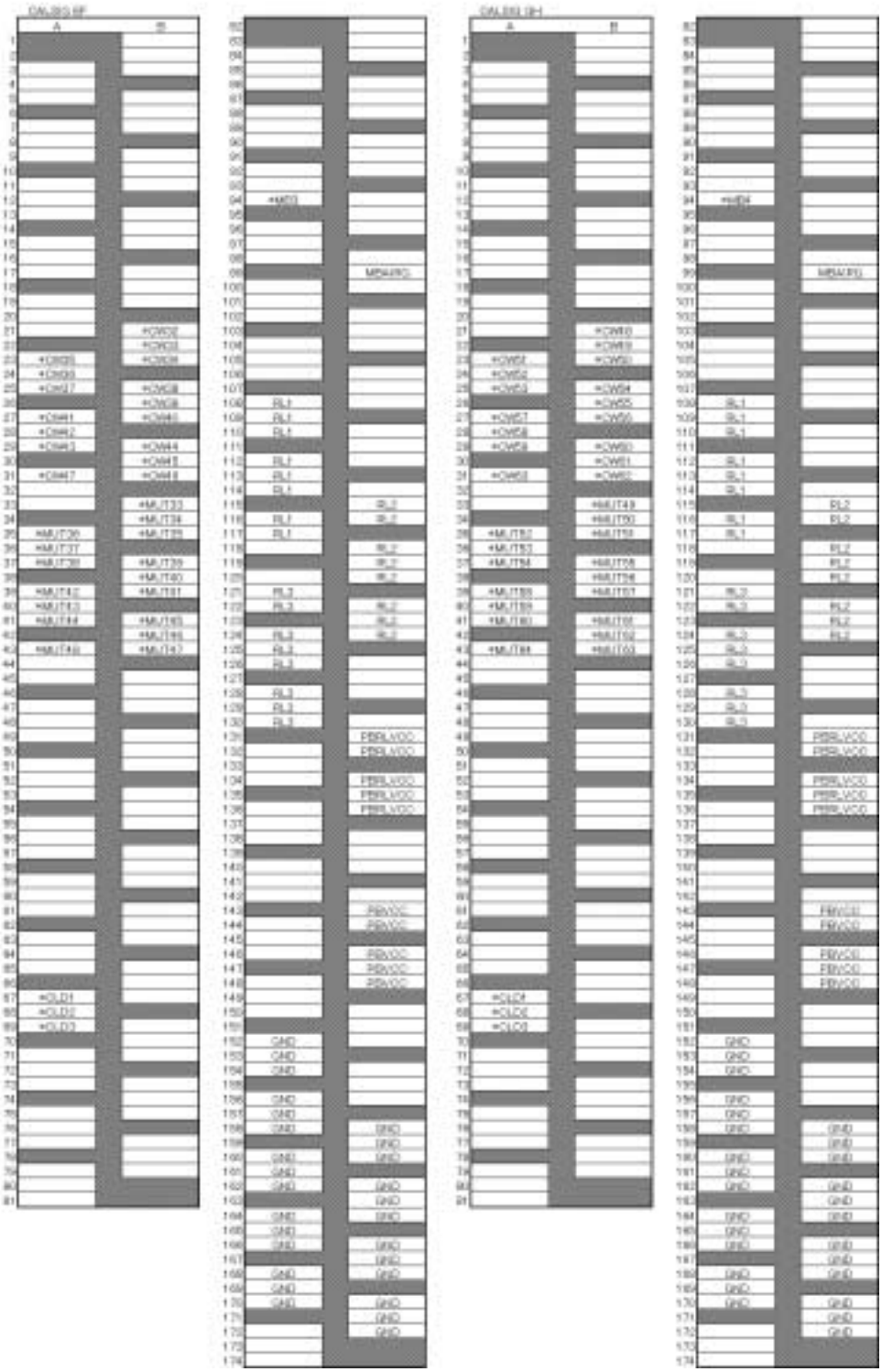

Figure 7-6 Connector Pin Layout on Cal & Sig Board (EF side/GH side)

PEOPA

	A	B
1		116A3G
2		116A3S
3	116A3L	116A3G
4	116A3L	
5	116A3L	115A3G
6		115A3S
7	115A3L	115A3G
8	115A3L	
9	115A3L	
10		
11		
12		
13		114A3G
14		114A3S
15	114A3L	114A3G
16	114A3L	
17	114A3L	113A3G
18		113A3S
19	113A3L	113A3G
20	113A3L	
21	113A3L	
22		
23		
24		
25		116A1G
26		116A1S
27	116A1L	116A1G
28	116A1L	
29	116A1L	115A1G
30		115A1S
31	115A1L	115A1G
32	115A1L	
33	115A1L	
34		
35		
36		
37		114A1G
38		114A1S
39	114A1L	114A1G
40	114A1L	
41	114A1L	113A1G
42		113A1S
43	113A1L	113A1G
44	113A1L	
45	113A1L	
46		
47		
48		
49		52A3G
50		52A3S
51	52A3L	52A3G
52	52A3L	
53	52A3L	51A3G
54		51A3S
55	51A3L	51A3G
56	51A3L	
57	51A3L	
58		
59		
60		
61		50A3G
62		50A3S
63	50A3L	50A3G
64	50A3L	
65	50A3L	49A3G
66		49A3S
67	49A3L	49A3G
68	49A3L	
69	49A3L	
70		
71		
72		
73		52A1G
74		52A1S
75	52A1L	52A1G
76	52A1L	
77	52A1L	51A1G
78		51A1S
79	51A1L	51A1G
80	51A1L	
81	51A1L	

82		
83		
84		
85		
86		50A1G
87		50A1S
88	50A1L	50A1G
89	50A1L	
90	50A1L	49A1G
91		49A1S
92	49A1L	49A1G
93	49A1L	
94	49A1L	
95		
96		
97		
98		30A4G
99		30A4S
100	30A2G	30A4G
101	30A2S	
102	30A2G	30A3G
103		30A3S
104	30A1G	30A3G
105	30A1S	
106	30A1G	29A4G
107		29A4S
108	29A2G	29A4G
109	29A2S	
110	29A2G	29A3G
111		29A3S
112	29A1G	29A3G
113	29A1S	
114	29A1G	28A4G
115		28A4S
116	28A2G	28A4G
117	28A2S	
118	28A2G	28A3G
119		28A3S
120	28A1G	28A3G
121	28A1S	
122	28A1G	27A4G
123		27A4S
124	27A2G	27A4G
125	27A2S	
126	27A2G	27A3G
127		27A3S
128	27A1G	27A3G
129	27A1S	
130	27A1G	26A4G
131		26A4S
132	26A2G	26A4G
133	26A2S	
134	26A2G	26A3G
135		26A3S
136	26A1G	26A3G
137	26A1S	
138	26A1G	25A4G
139		25A4S
140	25A2G	25A4G
141	25A2S	
142	25A2G	25A3G
143		25A3S
144	25A1G	25A3G
145	25A1S	
146	25A1G	
147		
148		
149		
150		
151		
152		
153		
154		
155		
156		
157		
158		
159		
160		
161		
162		
163		
164		
165		
166		
167		
168		
169		
170		
171		
172		
173		
174		

PEOPC

	A	B
1		113C3G
2		113C3S
3	113C3L	113C3G
4	113C3L	
5	113C3L	114C3G
6		114C3S
7	114C3L	114C3G
8	114C3L	
9	114C3L	
10		
11		
12		
13		115C3G
14		115C3S
15	115C3L	115C3G
16	115C3L	
17	115C3L	116C3G
18		116C3S
19	116C3L	116C3G
20	116C3L	
21	116C3L	
22		
23		
24		
25		113C1G
26		113C1S
27	113C1L	113C1G
28	113C1L	
29	113C1L	114C1G
30		114C1S
31	114C1L	114C1G
32	114C1L	
33	114C1L	
34		
35		
36		
37		115C1G
38		115C1S
39	115C1L	115C1G
40	115C1L	
41	115C1L	116C1G
42		116C1S
43	116C1L	116C1G
44	116C1L	
45	116C1L	
46		
47		
48		
49		49C3G
50		49C3S
51	49C3L	49C3G
52	49C3L	
53	49C3L	50C3G
54		50C3S
55	50C3L	50C3G
56	50C3L	
57	50C3L	
58		
59		
60		
61		51C3G
62		51C3S
63	51C3L	51C3G
64	51C3L	
65	51C3L	52C3G
66		52C3S
67	52C3L	52C3G
68	52C3L	
69	52C3L	
70		
71		
72		
73		49C1G
74		49C1S
75	49C1L	49C1G
76	49C1L	
77	49C1L	50C1G
78		50C1S
79	50C1L	50C1G
80	50C1L	
81	50C1L	

82		
83		
84		
85		
86		51C1G
87		51C1S
88	51C1L	51C1G
89	51C1L	
90	51C1L	52C1G
91		52C1S
92	52C1L	52C1G
93	52C1L	
94	52C1L	
95		
96		
97		
98		25C4G
99		25C4S
100	25C2G	25C4G
101	25C2S	
102	25C2G	25C3G
103		25C3S
104	25C1G	25C3G
105	25C1S	
106	25C1G	26C4G
107		26C4S
108	26C2G	26C4G
109	26C2S	
110	26C2G	26C3G
111		26C3S
112	26C1G	26C3G
113	26C1S	
114	26C1G	27C4G
115		27C4S
116	27C2G	27C4G
117	27C2S	
118	27C2G	27C3G
119		27C3S
120	27C1G	27C3G
121	27C1S	
122	27C1G	28C4G
123		28C4S
124	28C2G	28C4G
125	28C2S	
126	28C2G	28C3G
127		28C3S
128	28C1G	28C3G
129	28C1S	
130	28C1G	29C4G
131		29C4S
132	29C2G	29C4G
133	29C2S	
134	29C2G	29C3G
135		29C3S
136	29C1G	29C3G
137	29C1S	
138	29C1G	30C4G
139		30C4S
140	30C2G	30C4G
141	30C2S	
142	30C2G	30C3G
143		30C3S
144	30C1G	30C3G
145	30C1S	
146	30C1G	
147		
148		
149		
150		
151		
152		
153		
154		
155		
156		
157		
158		
159		
160		
161		
162		
163		
164		
165		
166		
167		
168		
169		
170		
171		
172		
173		
174		

Figure 7-7 Connector Pin Layout on Option Pin Card (PEOPA, PEOPC)

8 PERFORMANCE BOARD HANDLING PRECAUTIONS

The following explains precautions used when handling the performance board in order to prevent ZIF connectors breakage or contact failure.

CAUTION!
A performance board is heavy product. It can cause severe injury.
Carry the performance board with at least two persons.
Weight : 10 to 35kg

(1) Mounting the performance board

① Check to see that the pin card connector is open.
Check to see that the test head LOCK/FREE switch is set to FREE.

② Lift the performance board with two people.

③ Align the performance board using the register mark (▲).

④ Adjust the performance board horizontally and use the holes on the test head cover as a guide for mounting the performance board to the top of the test head.
The performance board can be positioned correctly by aligning the outside to the holes on the test head cover.

⑤ Slowly place the performance board on the test head while keeping it horizontal.

⑥ Make sure the performance board is mounted correctly and then push down on the handles with your hands to set it in place, making sure it does not float out of position.
When locking the connectors used in the performance board, the self cleaning system operates on the contact point of the connectors to prevent contact failure.
Operating the self cleaning system causes the performance board to lift approximately 1mm. If the performance board is not positioned correctly, the self cleaning effect will be ineffective and result in contact failure.

⑦ Press the LOCK switch to lock the connectors.

⑧ Check to see that the LOCK LED lights up.

<Performance board mounting precautions>

- Place the performance board slowly.
- Place the performance board horizontally.
- Make sure the performance board is mounted correctly. If the board is not mounted correctly, the connectors will break because of uneven force distribution.
- Mount it after moving the test head back into a horizontal position.

○ Correct position for mounting

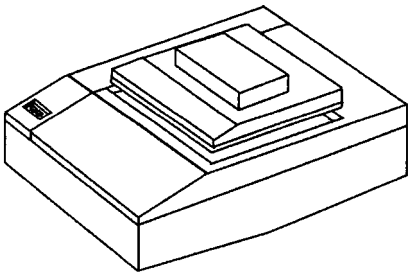

× Incorrect position for mounting

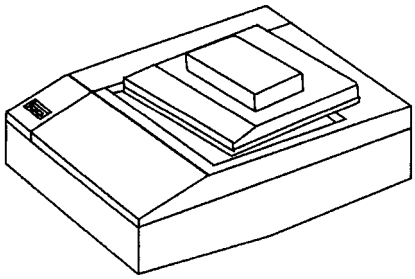

If the performance board is not placed correctly, the connectors will break.

(2) Avoiding contact failure

When connector contact failure occurs, repeat steps , and shown below repeatedly until the connectors are in contact.
The self cleaning operation helps to avoid the contact failure.

① Press the FREE switch to release connectors.

② Push the performance board handles down so as not to float the performance board.

③ Press the LOCK switch to lock the connectors.

(3) Attaching/Removing the performance board

① Press the FREE switch to release connectors.

② Make sure the FREE LED is lit.

③ Slowly lift the performance board horizontally with two people.
The performance board can be tilted.

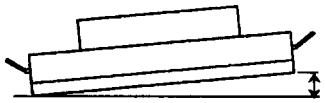

Lateral direction : up to 8cm

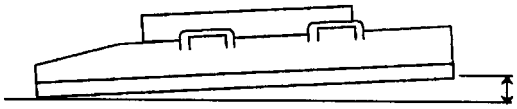

Vertical direction : up to 2cm

To lift the performance board correctly, use your thumb as a fulcrum to maintain balance. Lift it slowly and carefully.

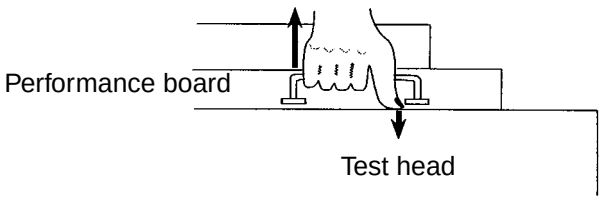

(4) Performance board storage precautions

Foreign particles including dust adhered to the contact point of the performance board connector may cause contact failure.

① Store it in a place where is not covered with dust, etc..

② When storing it, attach the performance board bottom cover.
It prevents dust, etc. from contaminating the board, and the performance board connectors from breaking.

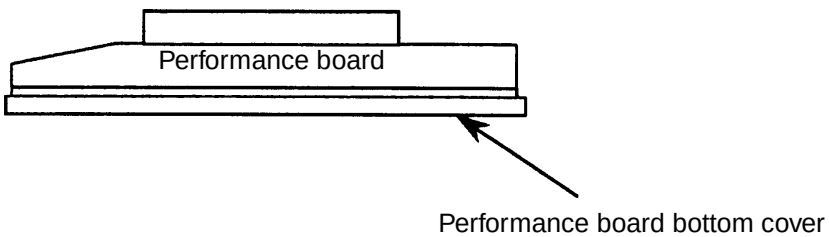

③ If foreign particles adheres to the contact point of the connectors, remove them using a brush (a toothbrush will do).
If you cannot remove them with a brush, apply isopropyl alcohol to the brush and clean the contact point.
Do not try to clean the contact points using a swab, cloth, paper or fiber-filled substances.

(5) Performance board assembling and wiring precautions

If flux used for soldering adheres to the contact point of the connectors, it may cause contact failure.

When assembling and wiring the performance board, attach the dust cover supplied with the performance board.

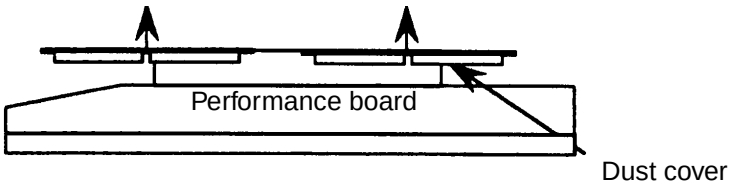

(6) Protecting the test head from dust

Contact failure can also occur even from dust settling on the connectors of the pin card side.

① Do not put objects (especially paper) on the test head to try to keep dust out;
The object may get caught in the connectors and damage them.

② When the system is not used, mount the performance board used for diagnosis, etc. on the test head to keep dust out.

APPENDIX 1 SPARE PARTS KIT

Table A1-1 Spare Parts Kit A

Name	Standard	Quantity
CALSIG	BGM-023178	1
DCMUX	BGM-023128	1
DC	BGR-024701	1
PPS	BGR-022365	1
SC	BGR-024841	1
PS MONITOR	BGR-024869	1
TGFC	BGR-024840	1
TGFC,SC Carrying Case	KH9-90861	2

Table A1-2 Spare Parts Kit B

Name	Standard	Quantity
ALPG	BGR-024409	1
FT DIST	BGR-024569	1
SC DIST	BGR-024570	1
VIO CONT	BGR-023419	1
TH CONT	BGC-023127	1

Table A1-3 Spare Parts Kit C

Name	Standard	Quantity
DPU IF	BGR-022363	1
VIO IF	BGR-023126	1
TERM	BGR-024641	1
GPIB,CBOX IF	BGR-022449	1

Table A1-4 Spare Parts Kit C1

Name	Standard	Quantity
FTU IF (With FLASH)	BIR-024571	1

Table A1-5 Spare Parts Kit C2

Name	Standard	Quantity
FTU IF (Without FLASH)	BIR-024571X02	1

Table A1-6 Spare Parts Kit D

Name	Standard	Quantity
FM CONT	BGR-024410	1

Table A1-7 Spare Parts Kit E

Name	Standard	Quantity
AFM	BIR-024411	1
144M MEM MODULE	BGC-024528	8

Table A1-8 Spare Parts Kit F

Name	Standard	Quantity
FMRA	BIR-024413	1
144M MEM MODULE	BGC-024528	8

Table A1-9 Spare Parts Kit G

Name	Standard	Quantity
PM	BGR-024412	1
144M MEM MODULE	BGC-024528	4

Table A1-10 Spare Parts Kit I

Name	Standard	Quantity
TP5 BASE	WBL-H36741TP5	1
TP CPU	WBL-H36741CPU	1
TP5 BUS IF	BGK-024673	1
PCI LVDS	BGC-024741	1

Table A1-11 Spare Parts Kit J

Name	Standard	Quantity
DR+IO PE	BGM-023206X04	1
PE Carrying Case	KH9-90745	1

Table A1-12 Spare Parts Kit K

Name	Standard	Quantity
DR PE	BGM-023206X05	1
PE Carrying Case	KH9-90745	1

Table A1-13 Spare Parts Kit L (MRA4 Support)

Name	Standard	Quantity
SHARAD MEM BOARD	BGR-023085	1

Table A1-14 Spare Parts Kit M (MRA4 Support)

Name	Standard	Quantity
MCPU BOARD	WBL-023086A	1

Table A1-15 Spare Parts Kit N (MRA4 Support)

Name	Standard	Quantity
RCPU BOARD	WBL-023084A	1

Table A1-16 Spare Parts Kit O (MRA4 Support)

Name	Standard	Quantity
EWS I/F BOARD	BGC-024429X02	1

Table A1-17 Spare Parts Kit P

Name	Standard	Quantity
Dummy PE (With ZIF)	BGM-023129	1

Table A1-18 Spare Parts Kit Q (MRA4 Support)

Name	Standard	Quantity
MCPU BOARD	WUN-023086B	1

Table A1-19 Spare Parts Kit R (MRA4 Support)

Name	Standard	Quantity
RCPU BOARD	WUN-023084B	1

Table A1-20 Spare Parts Kit S

Name	Standard	Quantity
AFM	BIR-024411	1
576M MEM MODULE	BGC-025755	8

Table A1-21 Spare Parts Kit T

Name	Standard	Quantity
FMRA	BIR-024413	1
576M MEM MODULE	BGC-025755	8

Table A1-22 Spare Parts Kit U

Name	Standard	Quantity
TP5 Base	WBL-H35741TP5	1
TP5 CPU	WBL-H36741CPU	1
128MB Expansion Memory Module	WBL-H36873MEM	1
TP5 TBUS IF	BGK-024673	1
PCILVDS	BGC-024741	1

APPENDIX 2 MAINTENANCE SUMMARY OF ENVIRONMENT PROCESSOR

	Environment processor
Starting inspection	• Diagnosis by self-diagnostic program in power ON
One week inspection	
One month inspection	• Check that the cooling fans used for Ultra 5, the optional hard disk and the cartridge MT unit are operating correctly.
Three month inspection	• Check up using the diagnostic program
Six month inspection	• Clean the air intakes of Ultra 5, the optional hard disk and the cartridge MT unit.
One year inspection	

A2.1 Maintenance for Environmental Processor

See the following manuals for the maintenance of the environmental processor.

- W2345 EWS Maintenance Manual
  Manual number: 8335125

APPENDIX 3 MAINFRAME ASSEMBLY AND WIRING DIAGRAM

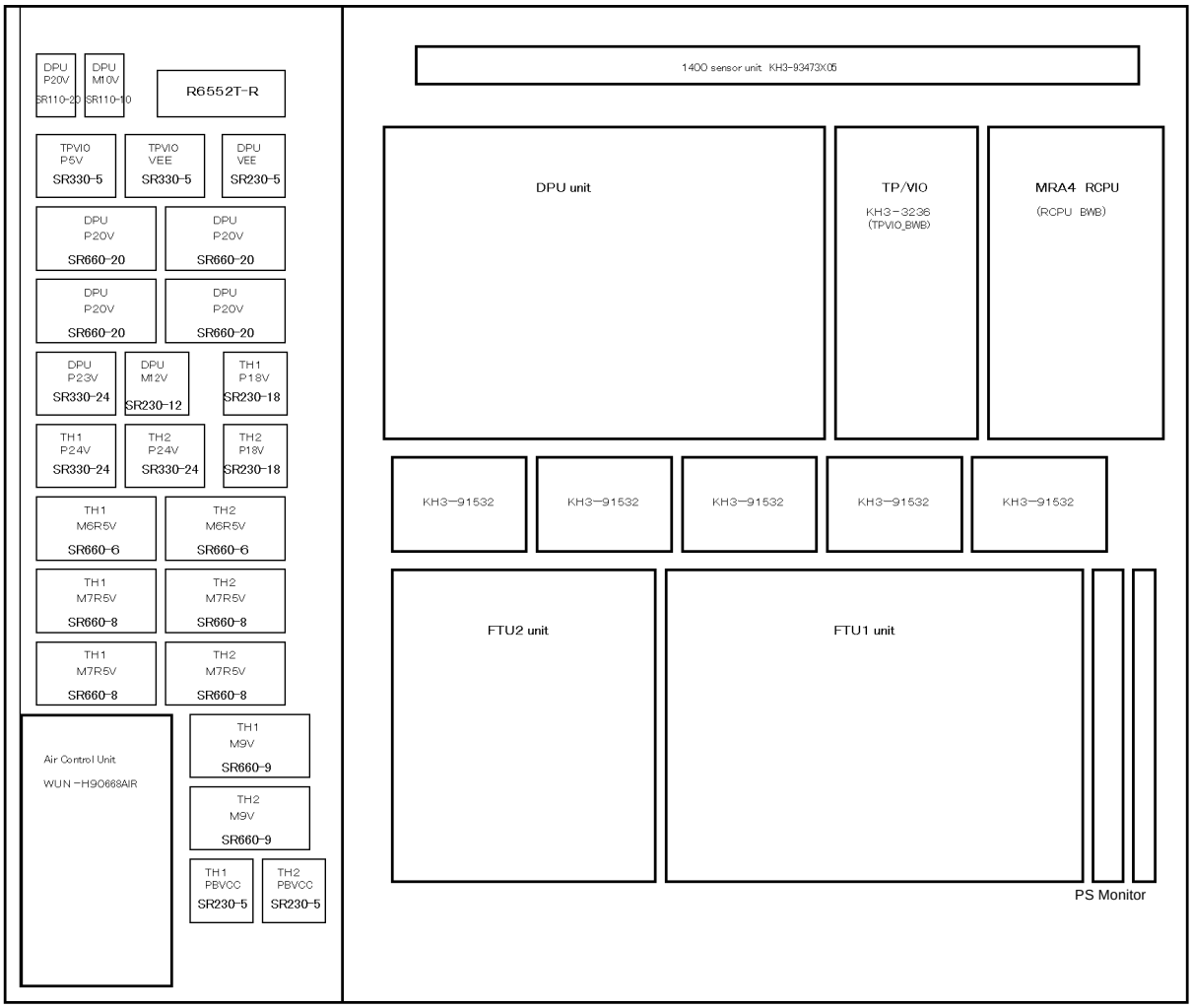

T5371 MF Front Layout

MAIN FRAME Unit Layout (Front View)

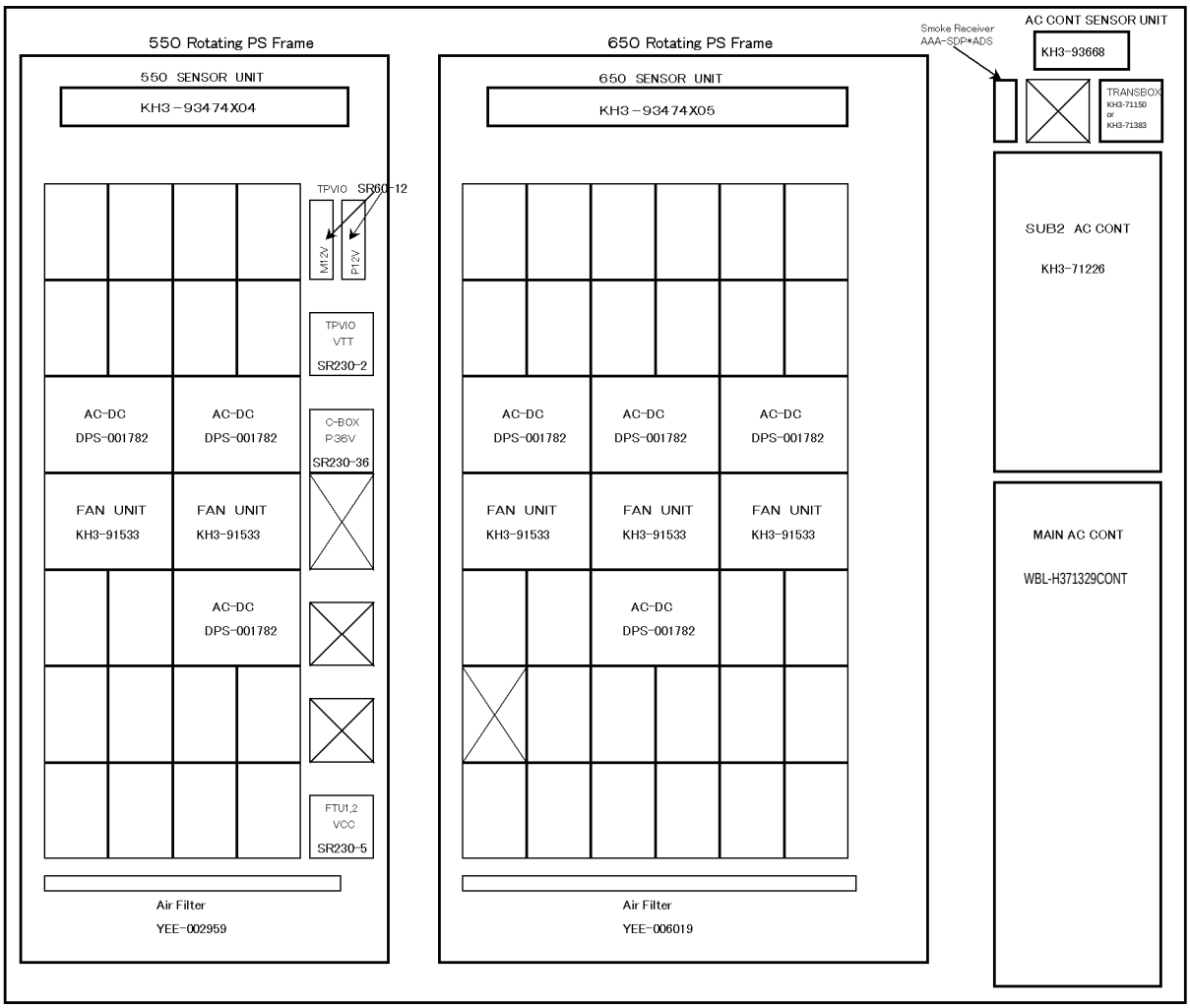

T5371 MF Rear Unit Layout with Rotating Frame Closed

No Power Supply is installed.

MAIN FRAME Unit Layout (Rear View)

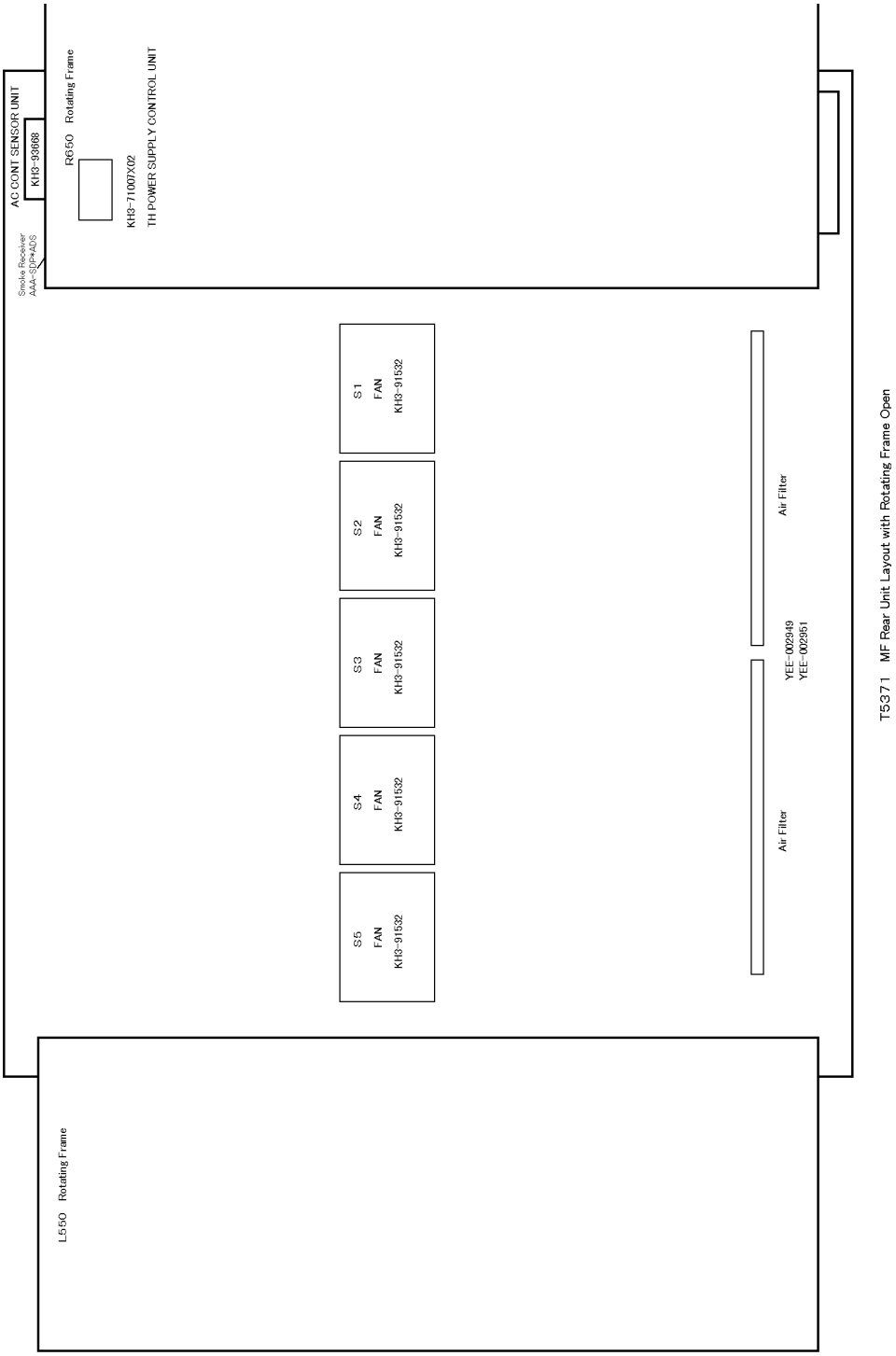

MAIN FRAME Unit Layout (Rear View)

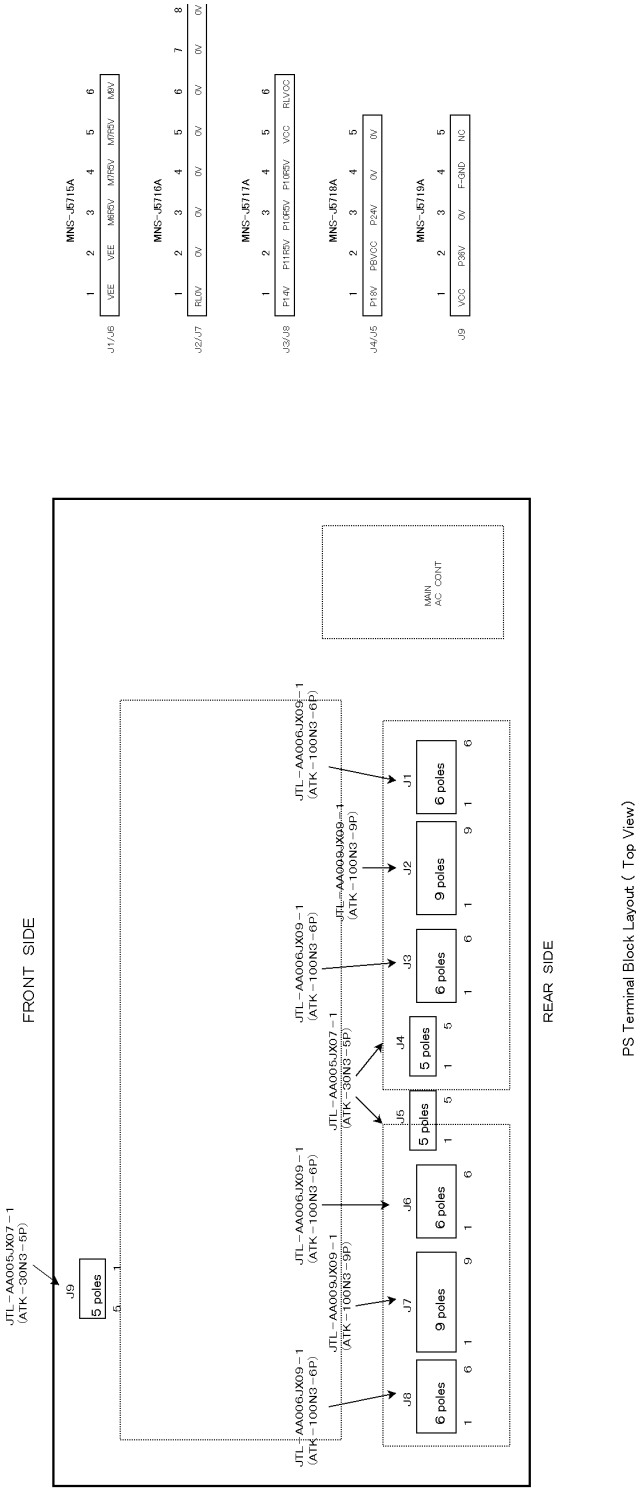

PS Terminal Block Layout (Top View)

MAIN FRAME Terminal Block Layout

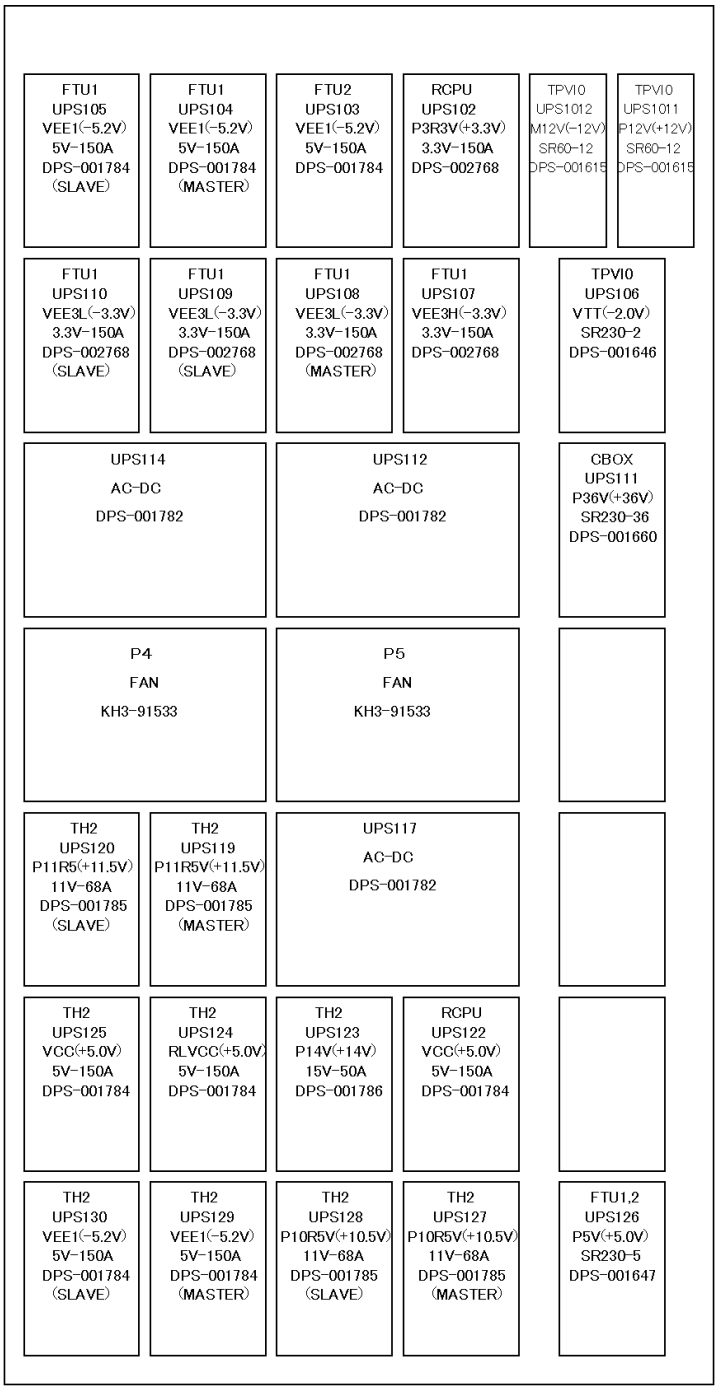

REAR SIDE L550

Rotary Base (Left) L550 Power Supply Layout

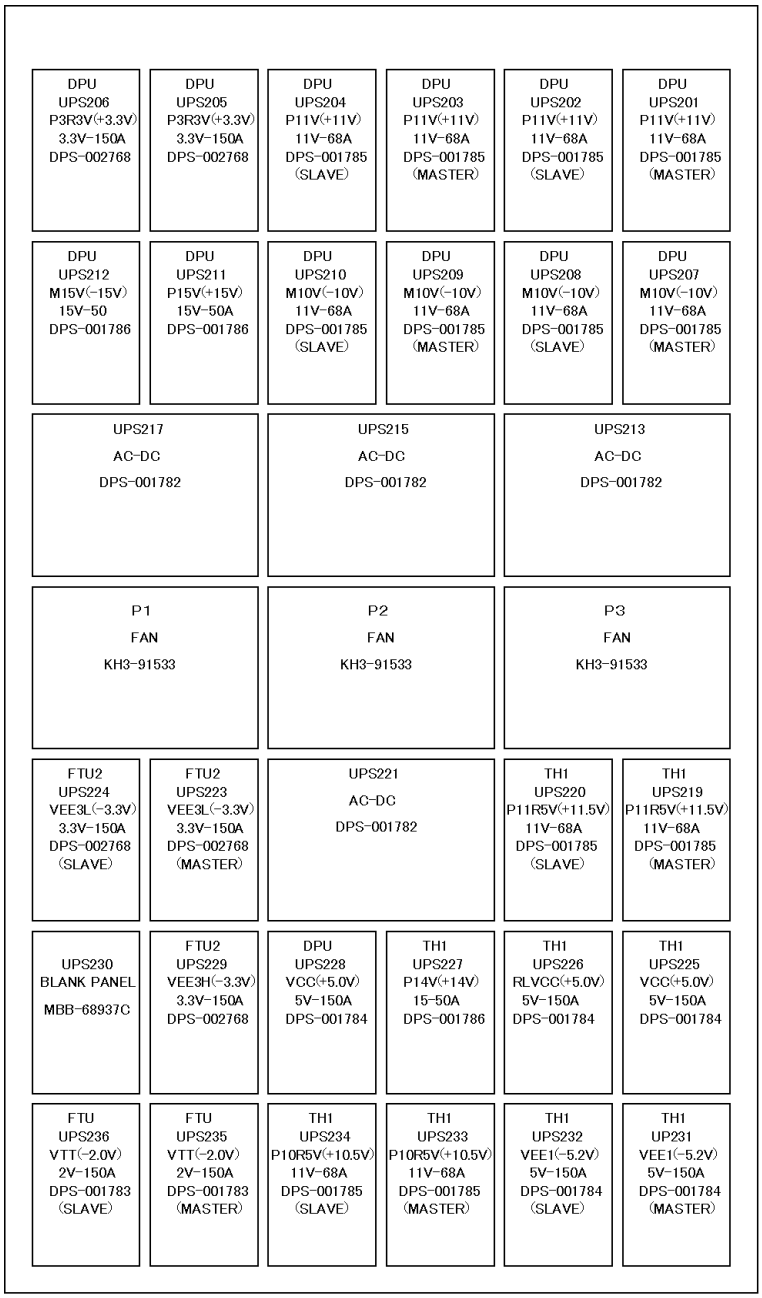

REAR SIDE R650

Rotary Base (Right) R650 Power Supply Layout

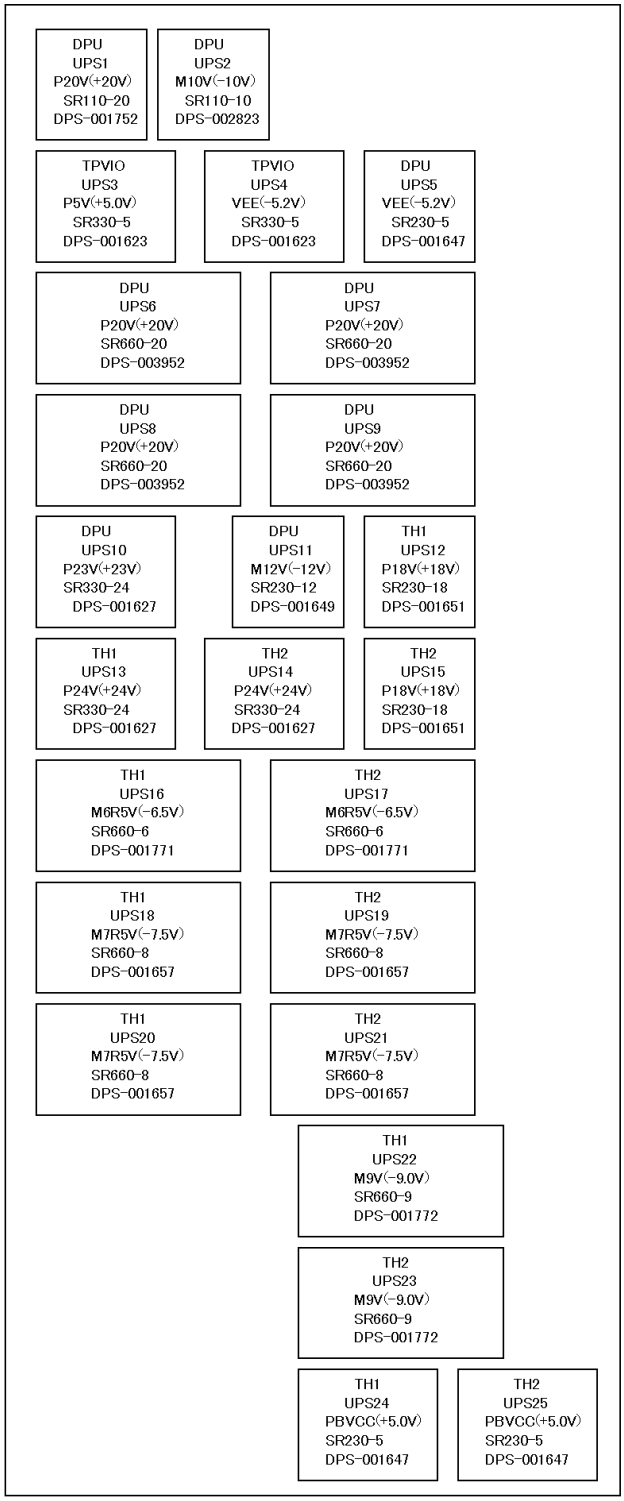

FRONT SIDE

Front SR Power Supply

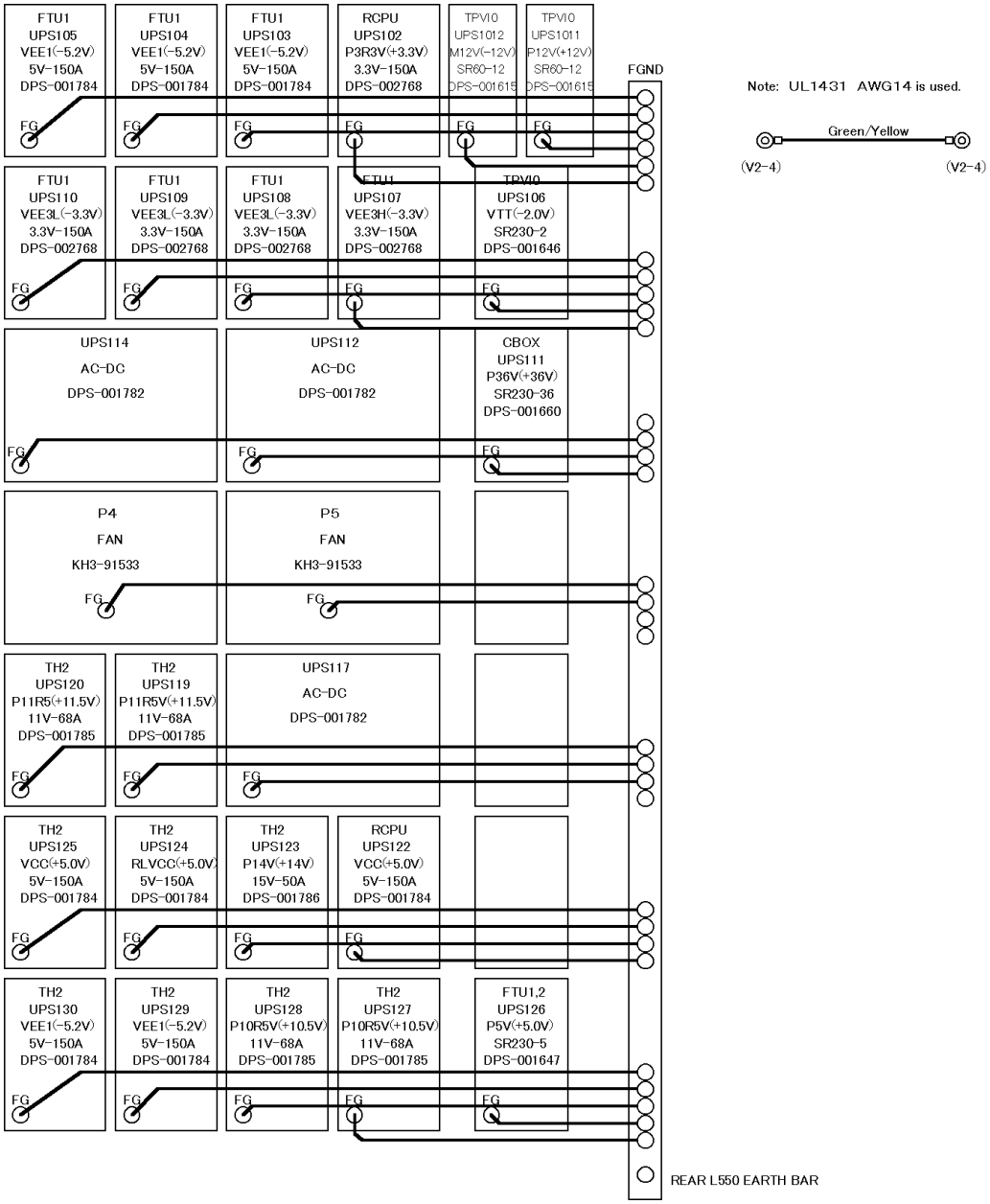

Rotary Base (Left) L550 FGND Connection

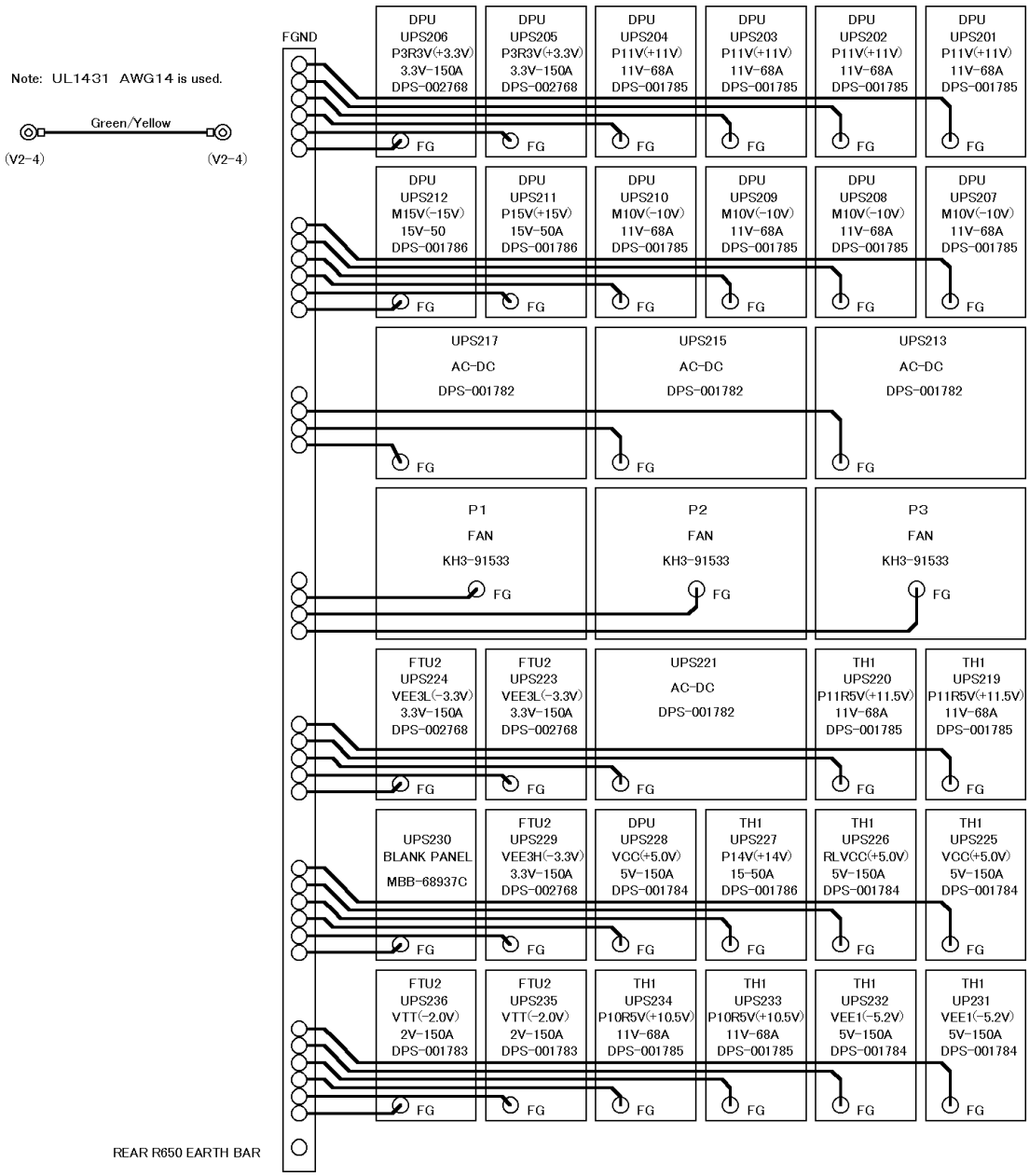

Rotary Base (Right) R650 FGND Connection

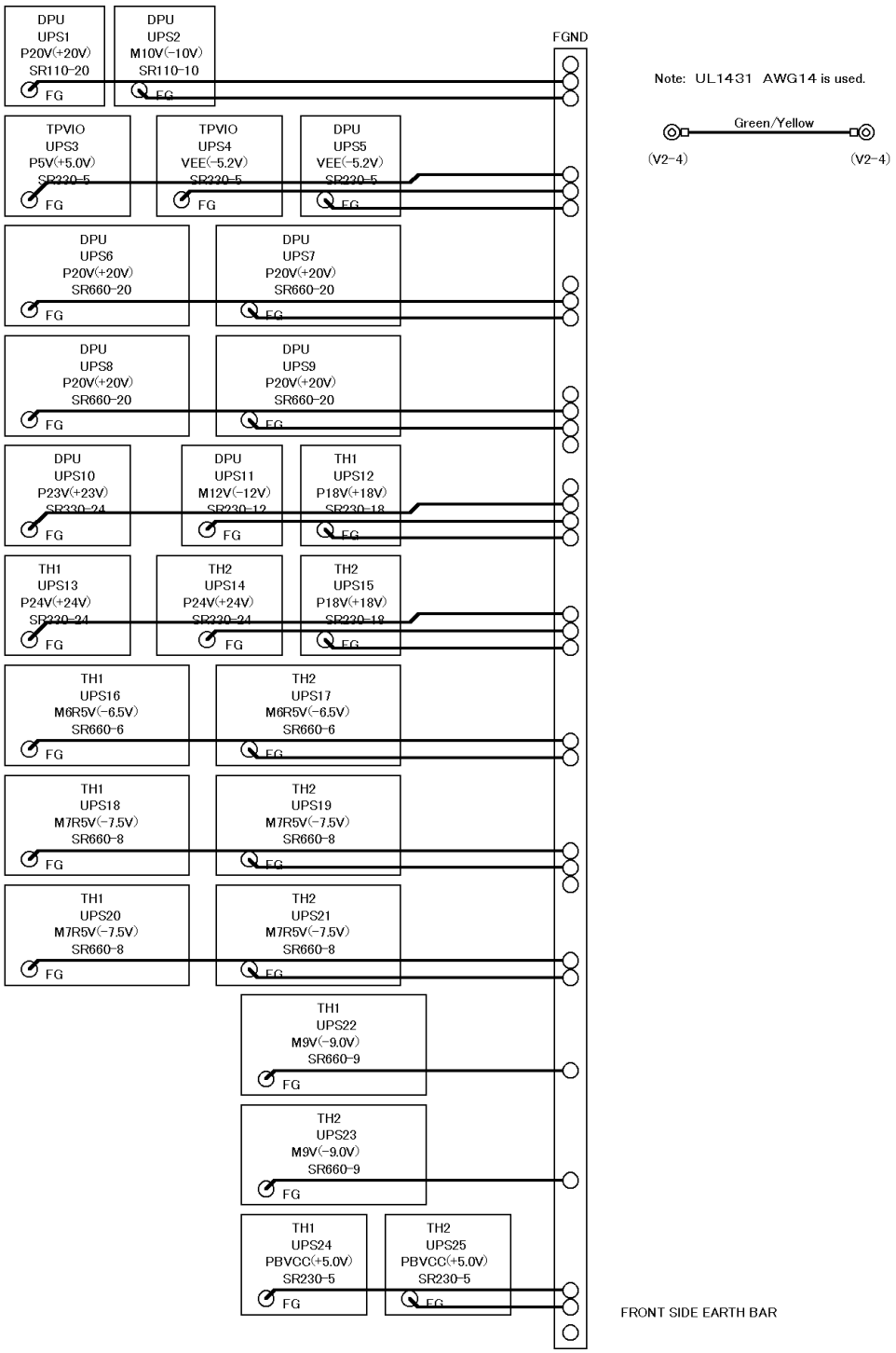

Front SR Power Supply FGND Connection

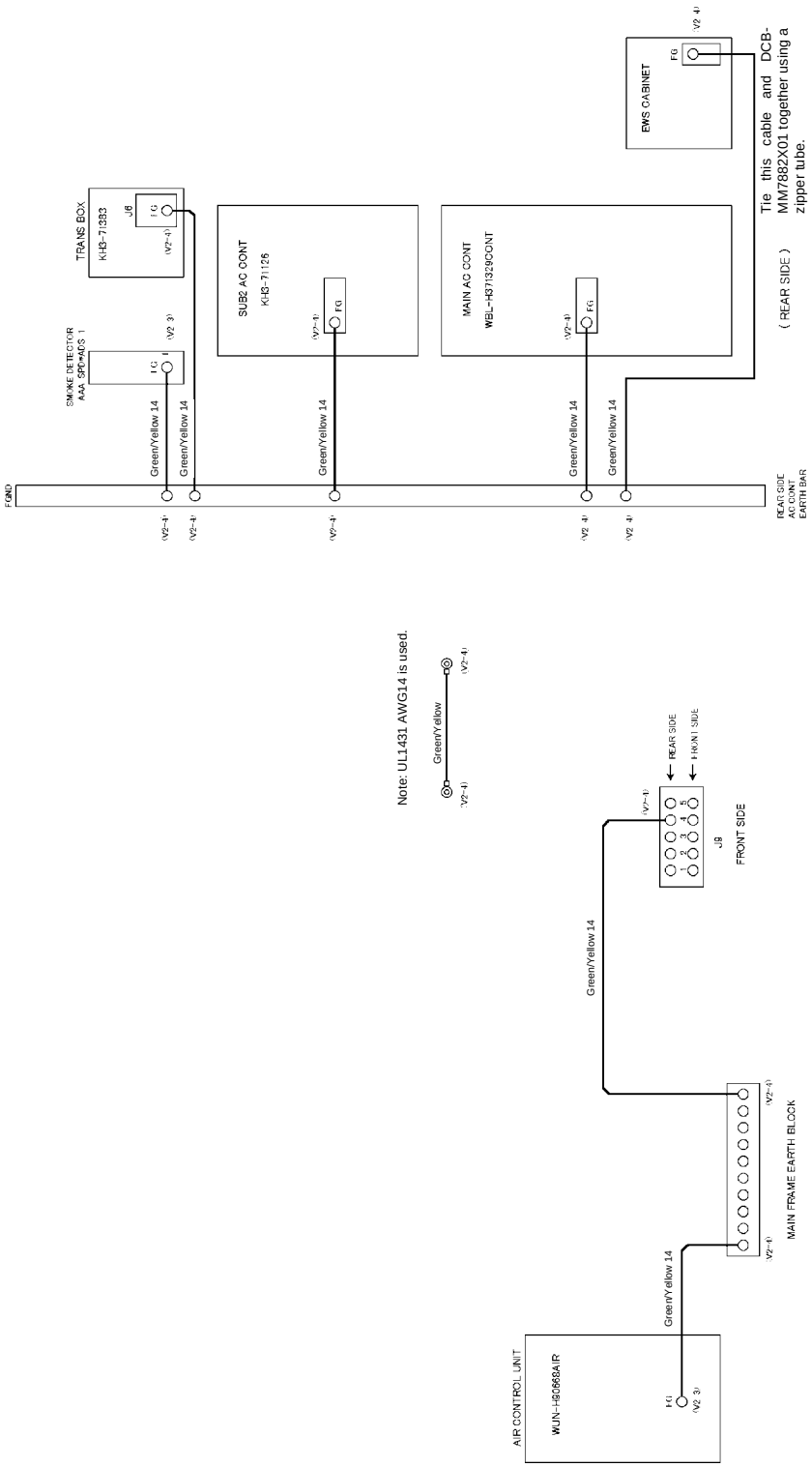

MAIN FRAME FGND Connection (1/3)
(When the transformer unit code is KH3-71150)

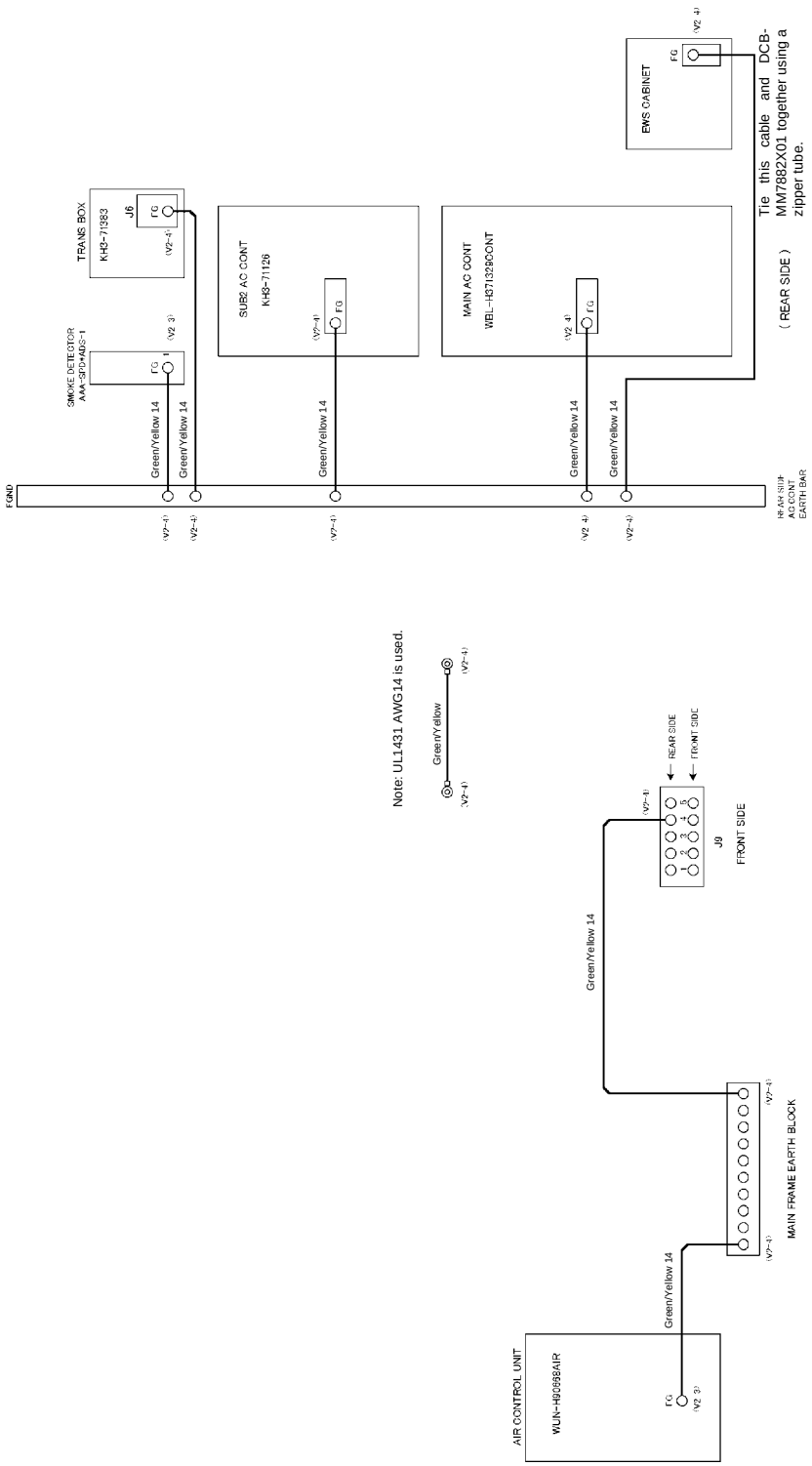

MAIN FRAME FGND Connection (2/3)
(When the transformer unit code is KH3-71383)

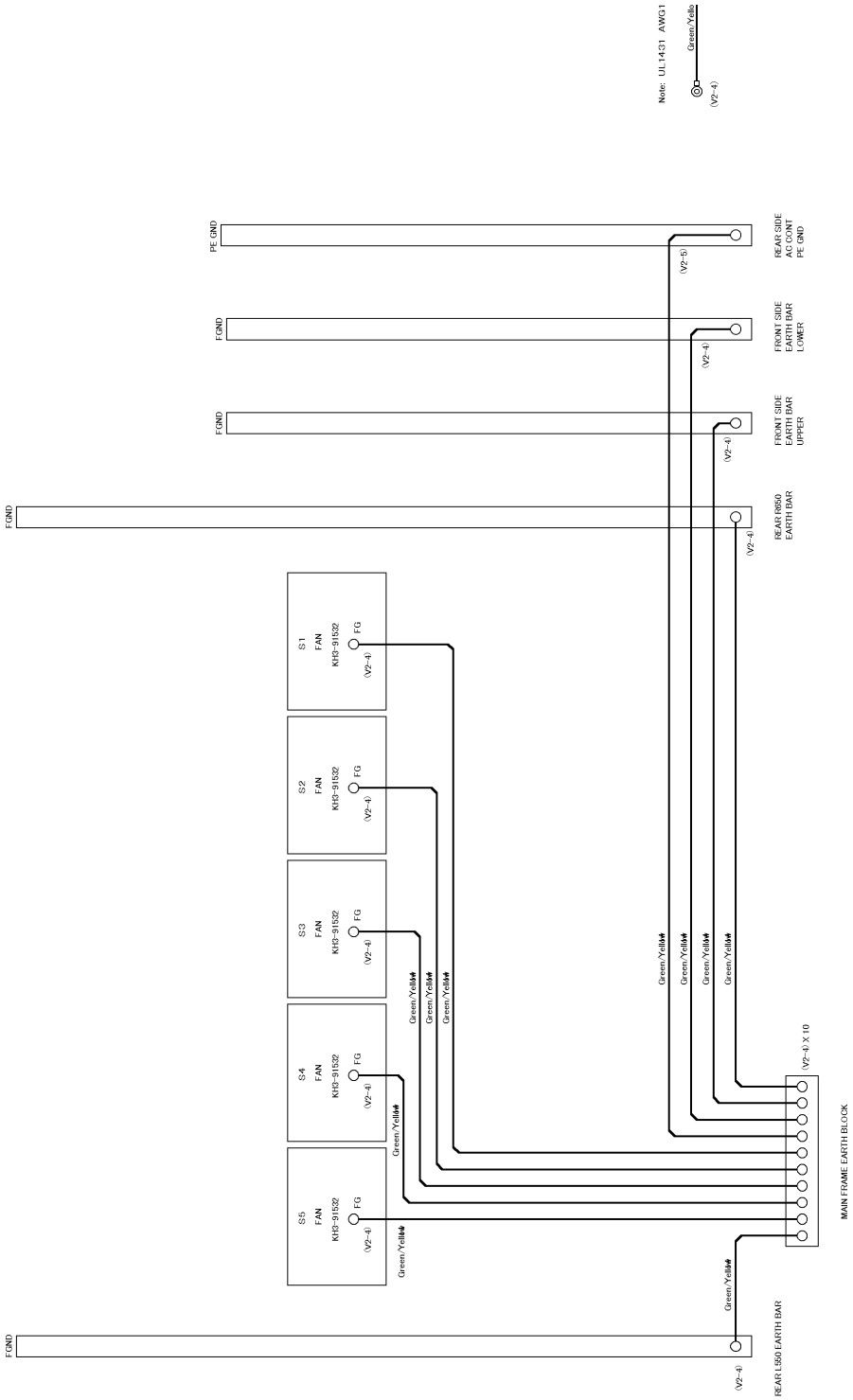

MAIN FRAME FGND Connection (3/3)

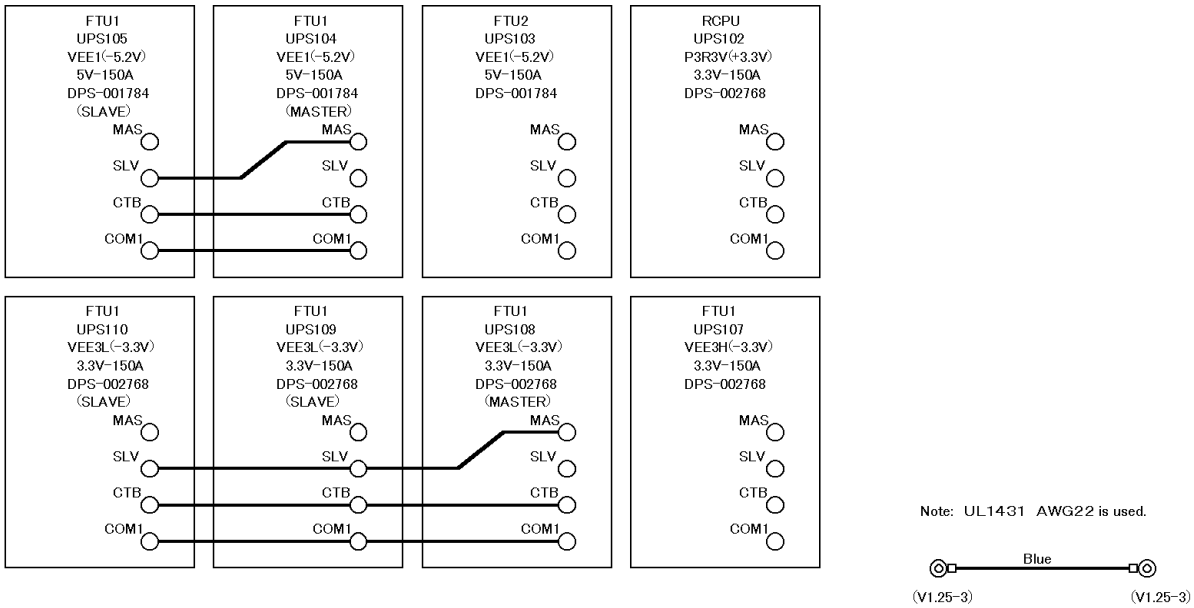

L550 PS Frame - Upper Half

Rotary Base (Left) L550 Master/Slave Connection (1/2)

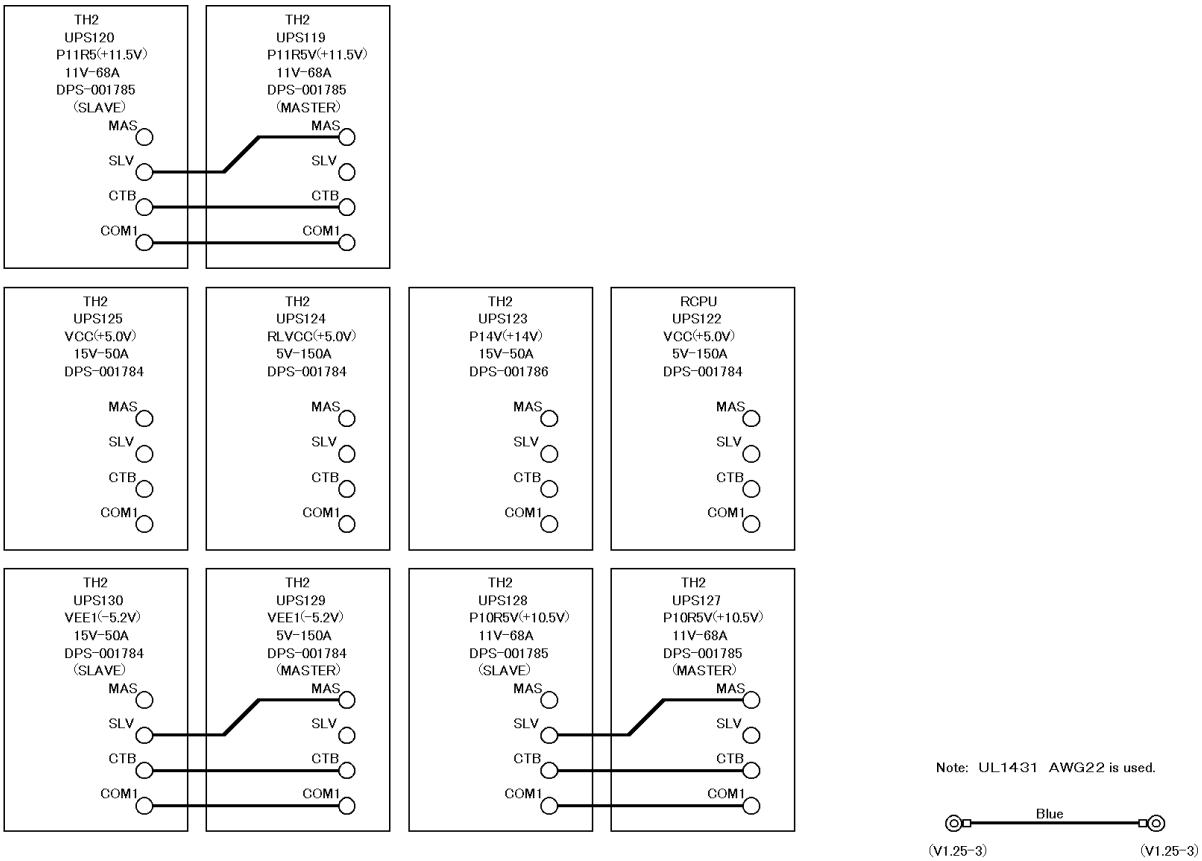

L550 PS Frame - Lower Half

Rotary Base (Left) L550 Master/Slave Connection (2/2)

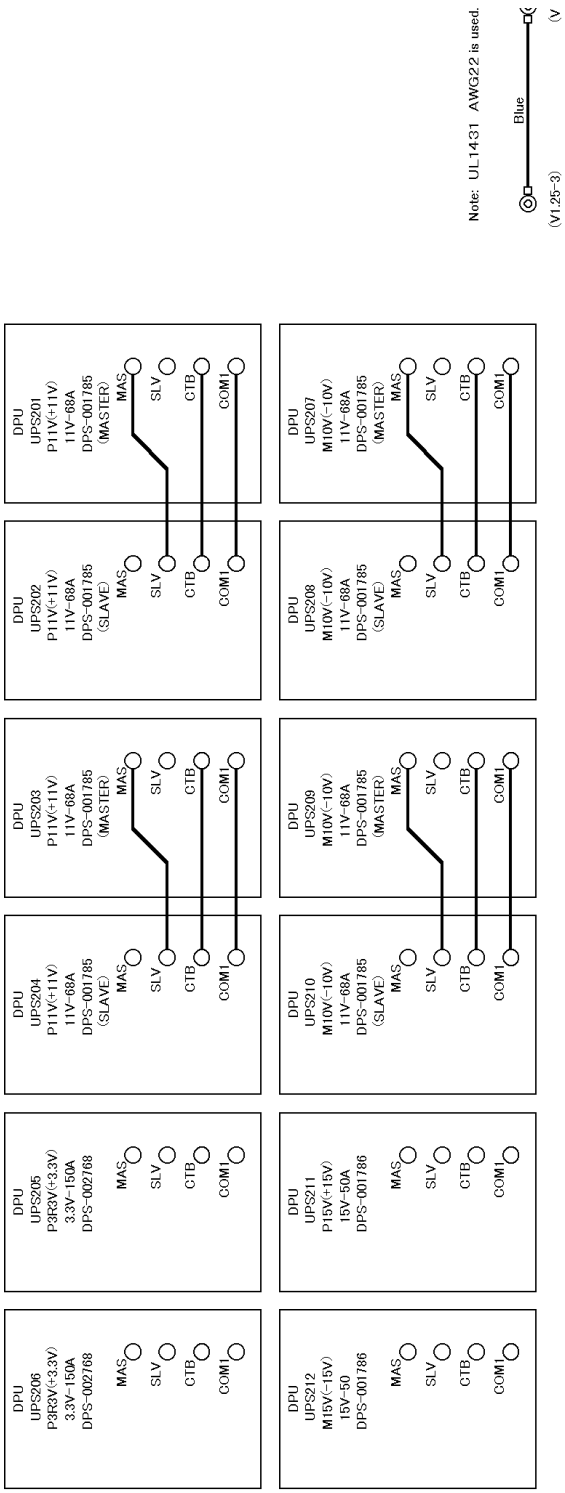

Rotary Base (Right) R650 ACDC MASTER/SLAVE Connection (1/2)

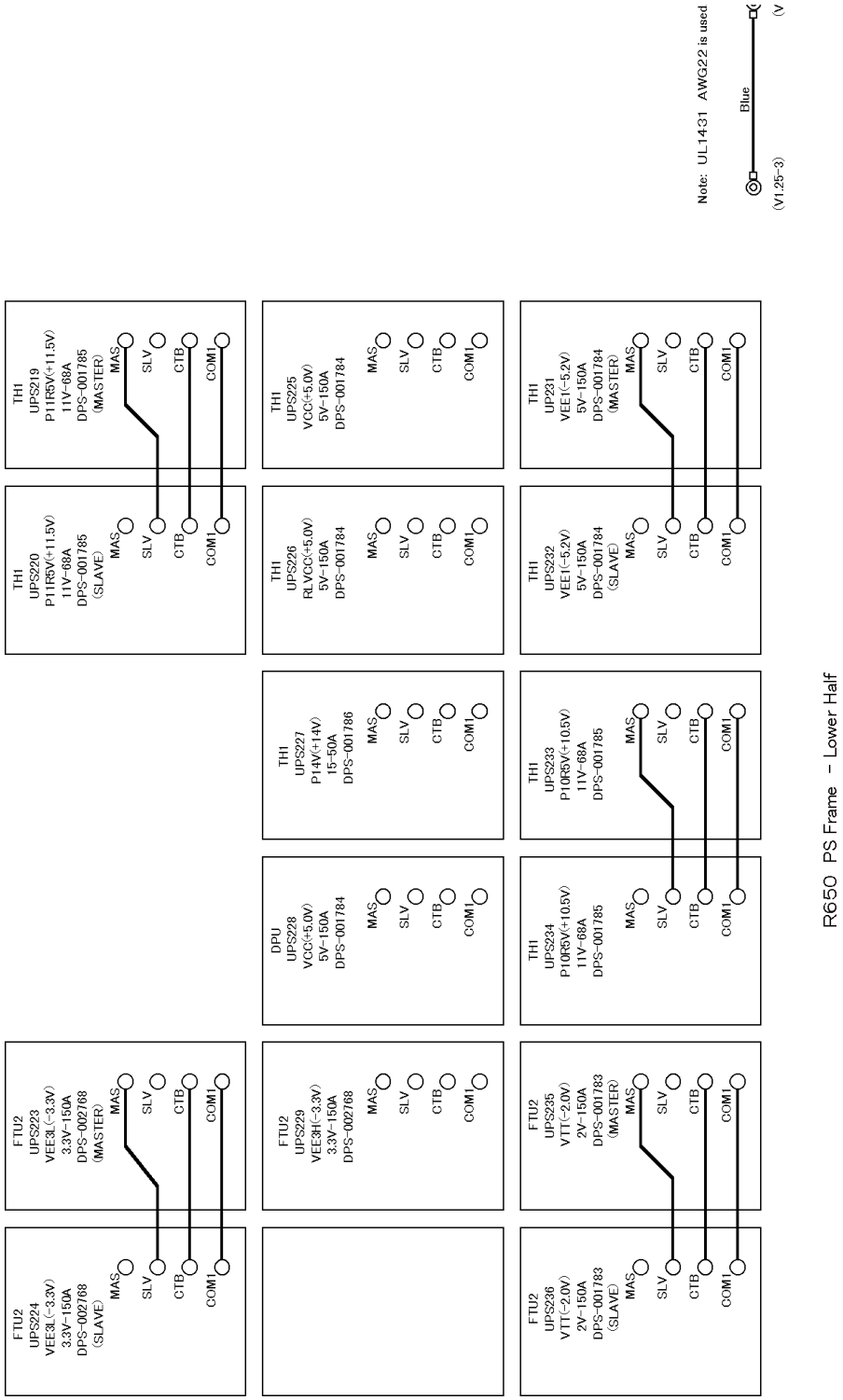

Rotary Base (Right) R650 ACDC MASTER/SLAVE Connection (2/2)

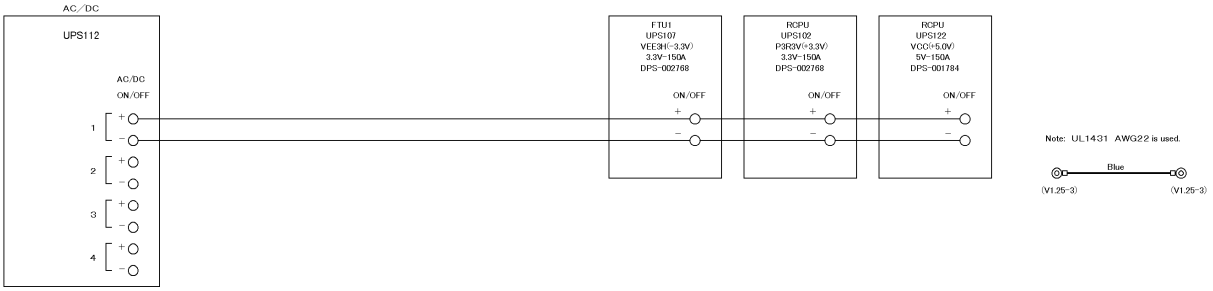

UPS112 ACDC ON/OFF OUT (1/3)

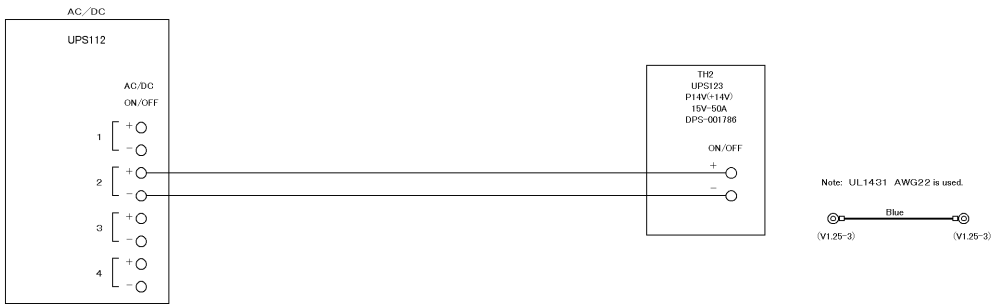

UPS112 ACDC ON/OFF OUT (2/3)

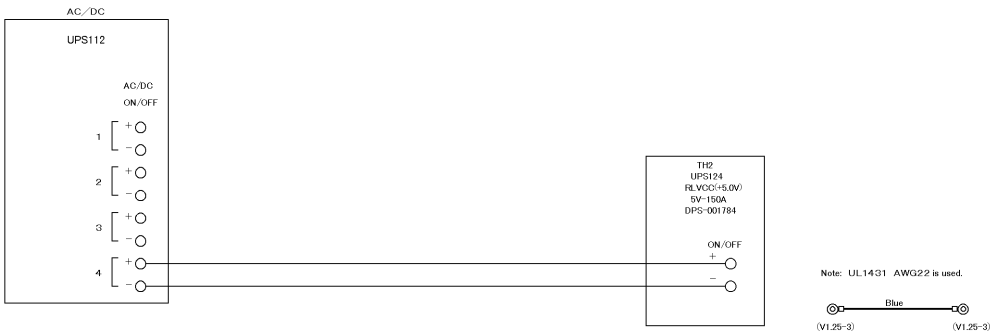

UPS112 ACDC ON/OFF OUT (3/3)

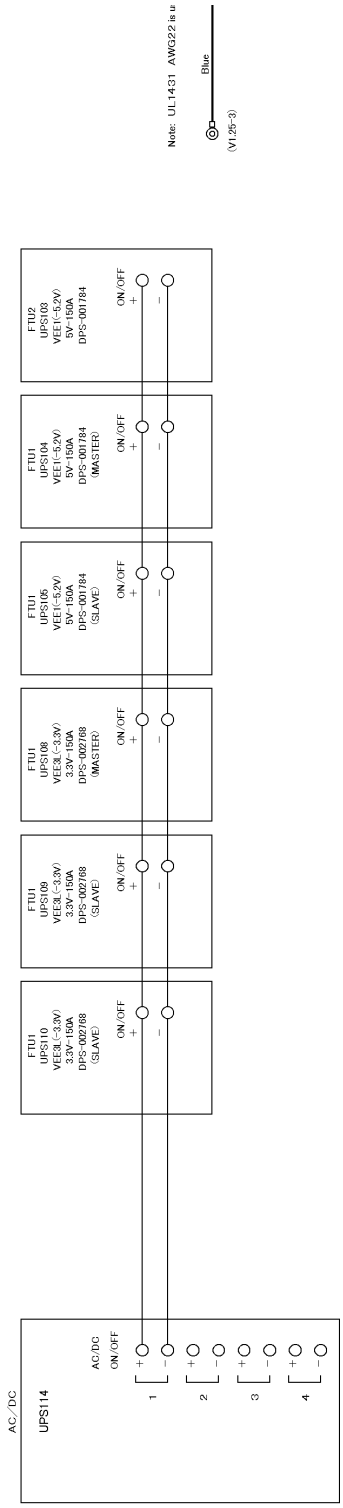

UPS114 ACDC ON/OFF OUT (1/1)

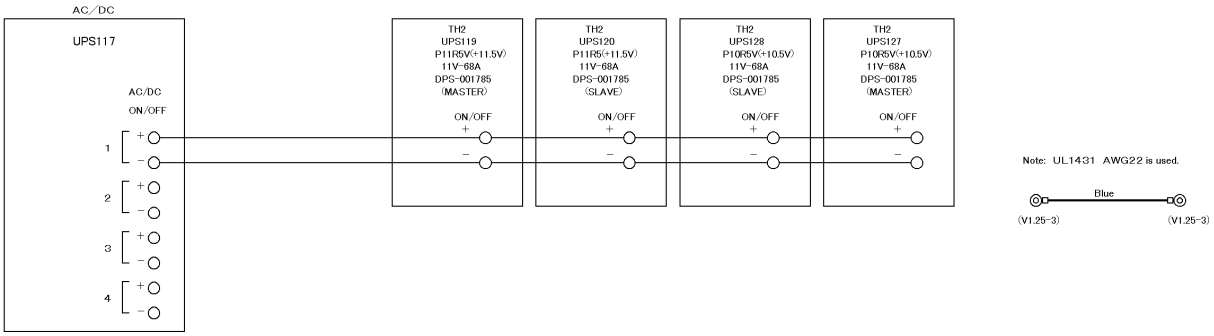

UPS117 ACDC ON/OFF OUT (1/2)

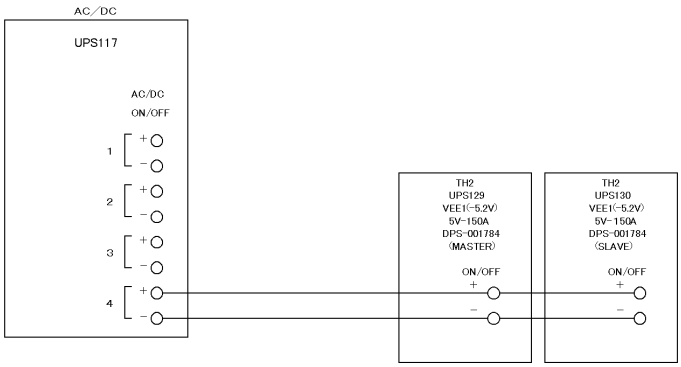

UPS117 ACDC ON/OFF OUT (2/2)

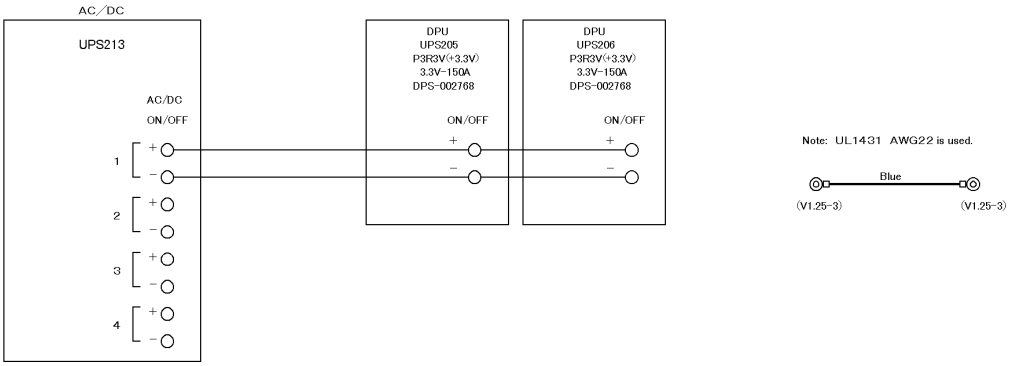

UPS213 ACDC ON/OFF OUT (1/2)

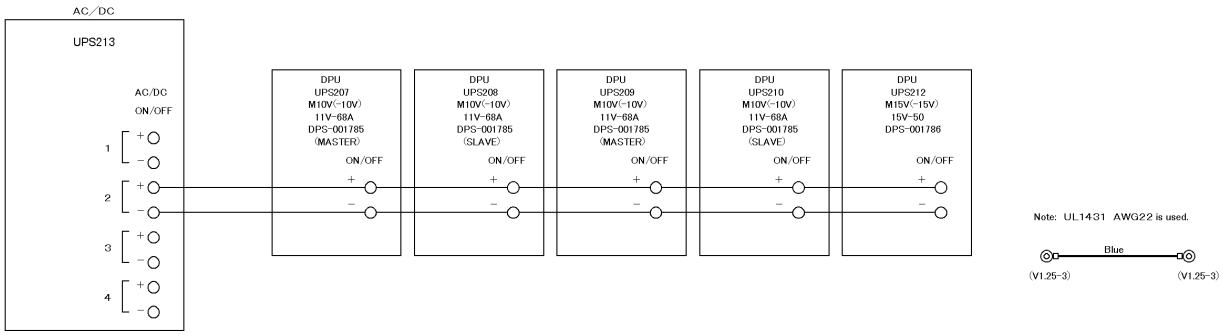

UPS213 ACDC ON/OFF OUT (2/2)

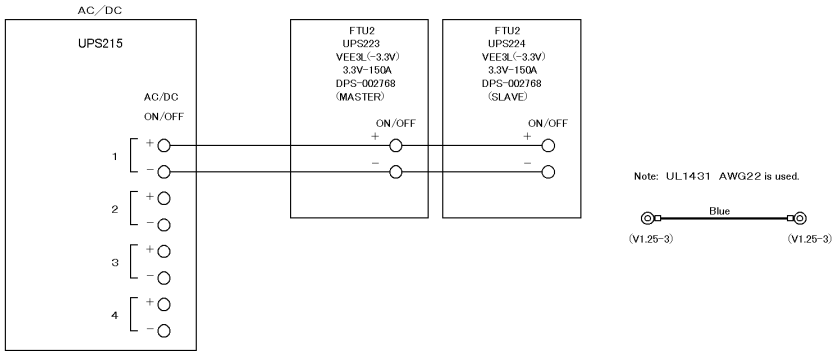

UPS215 ACDC ON/OFF OUT (1/2)

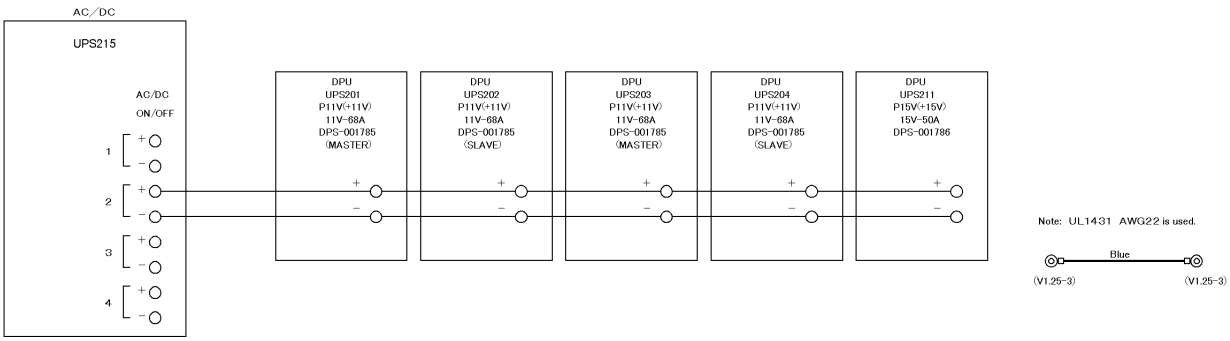

UPS215 ACDC ON/OFF OUT (2/2)

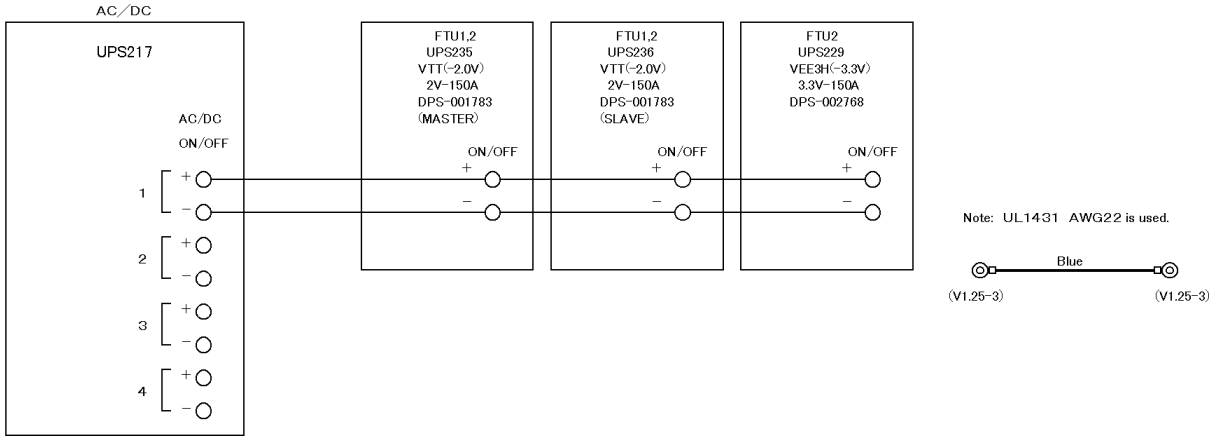

UPS217 ACDC ON/OFF OUT (1/3)

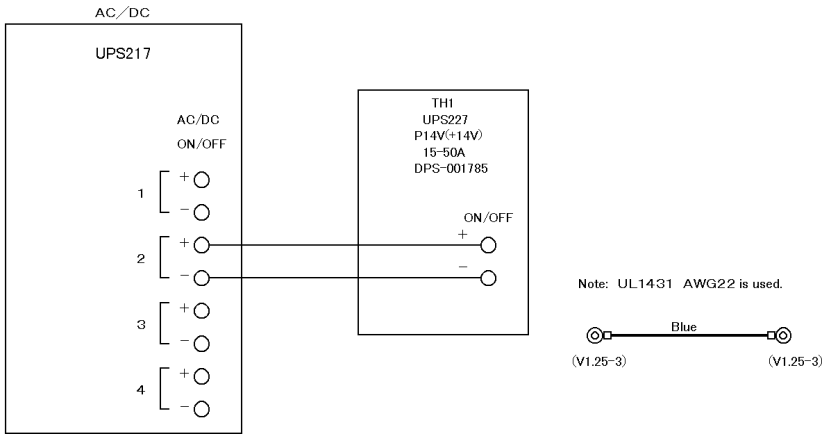

UPS217 ACDC ON/OFF OUT (2/3)

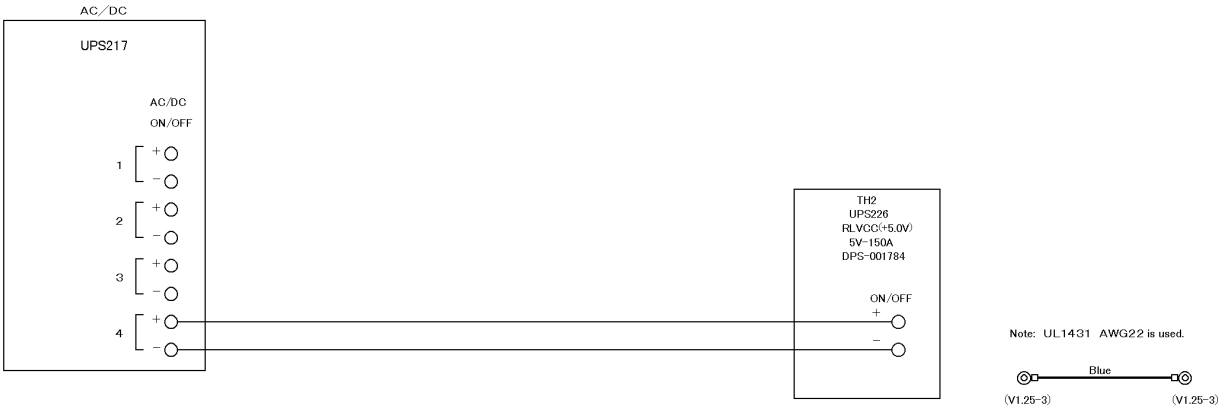

UPS217 ACDC ON/OFF OUT (3/3)

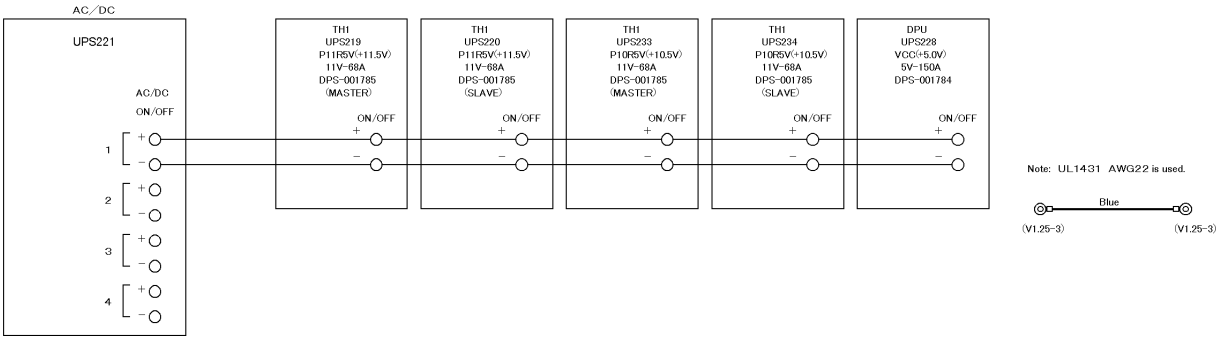

UPS221 ACDC ON/OFF OUT (1/2)

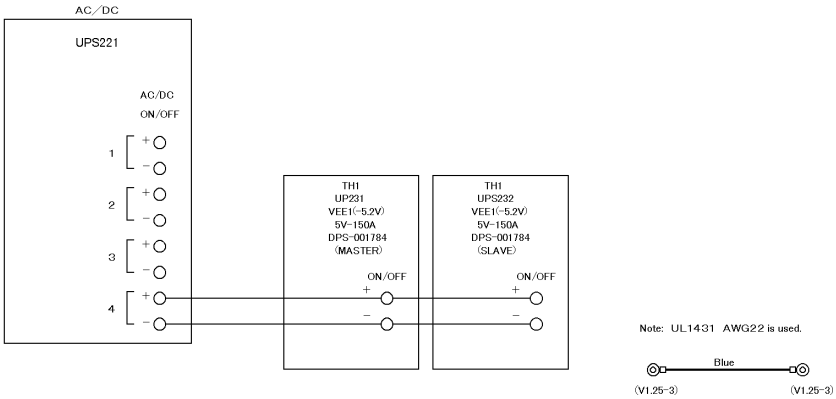

UPS221 ACDC ON/OFF OUT (2/2)

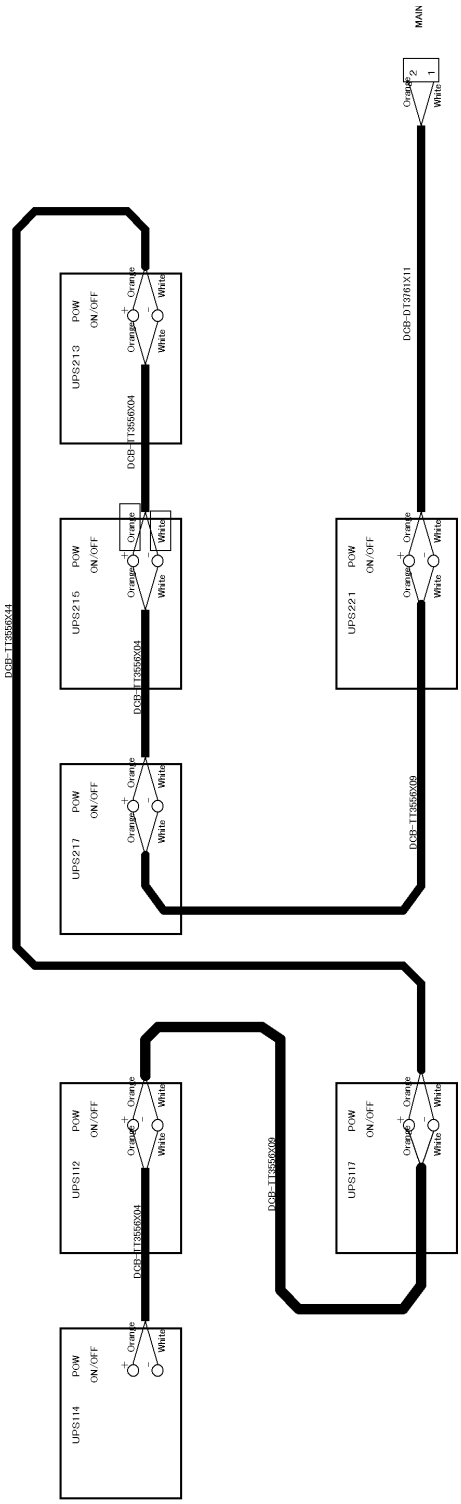

AC/DC ON/OFF Power Sequence

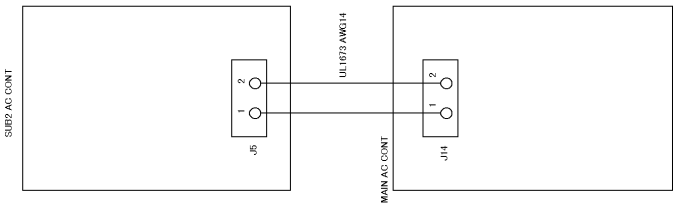

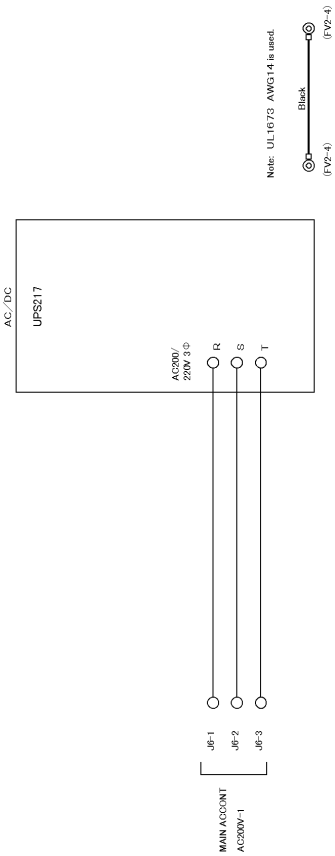

MAIN AC CONT -SUB2 AC CONT 200VAC
UPS217 ACDC 200VAC IN

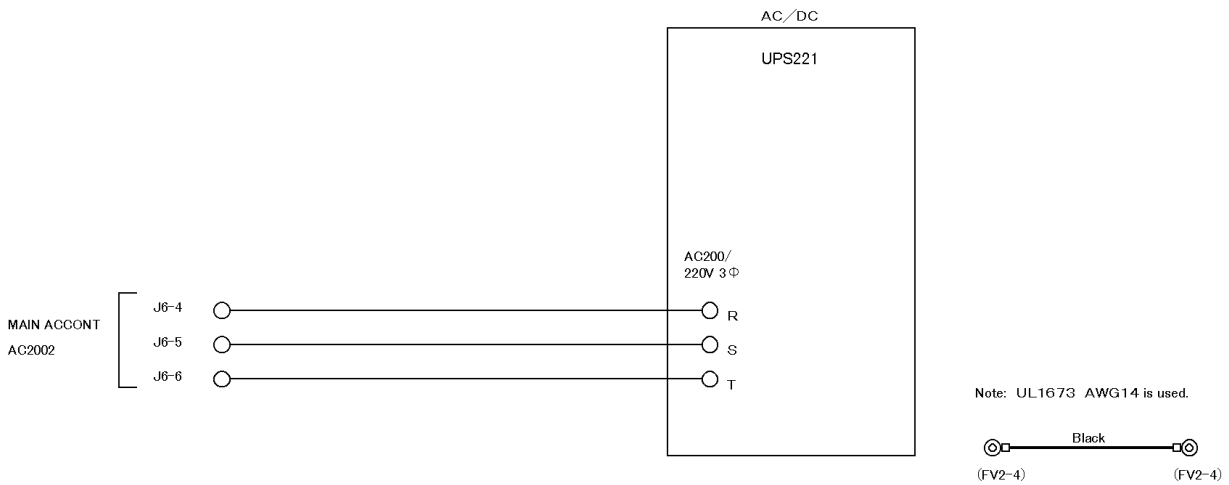

UPS221 ACDC 200VAC IN

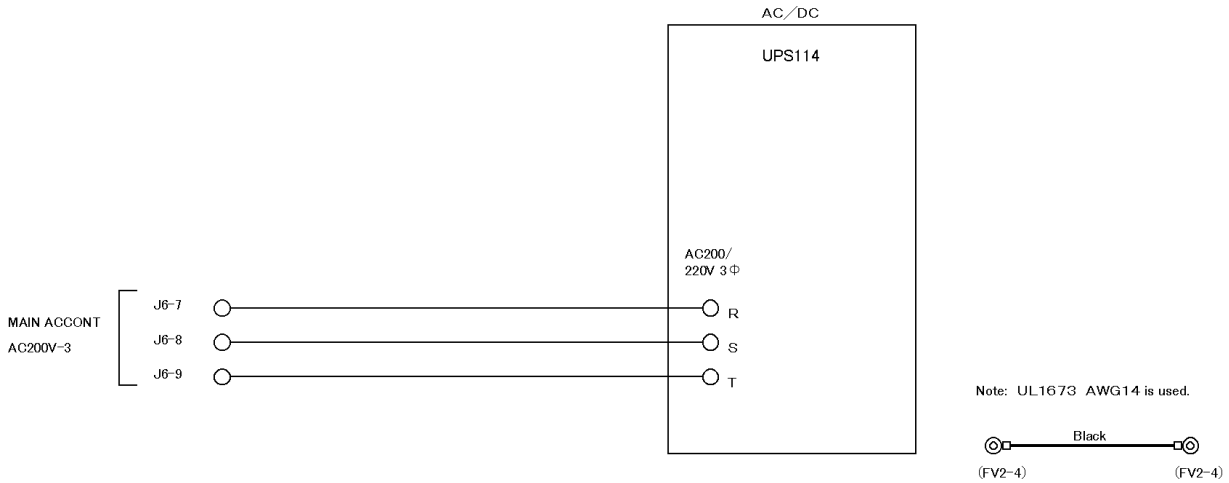

UPS114 ACDC 200VAC IN

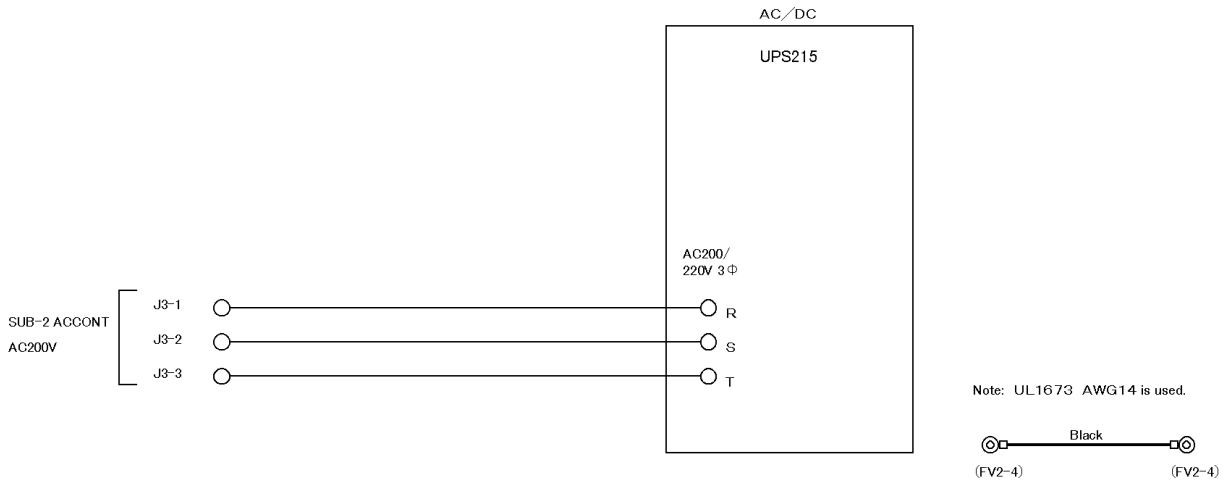

UPS215 ACDC 200VAC IN

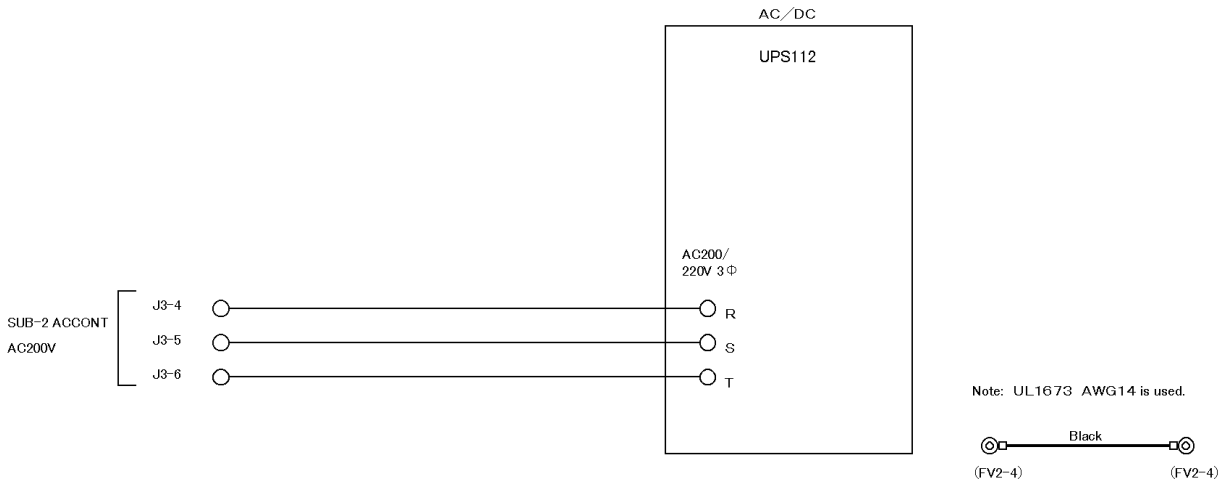

UPS112 ACDC 200VAC IN

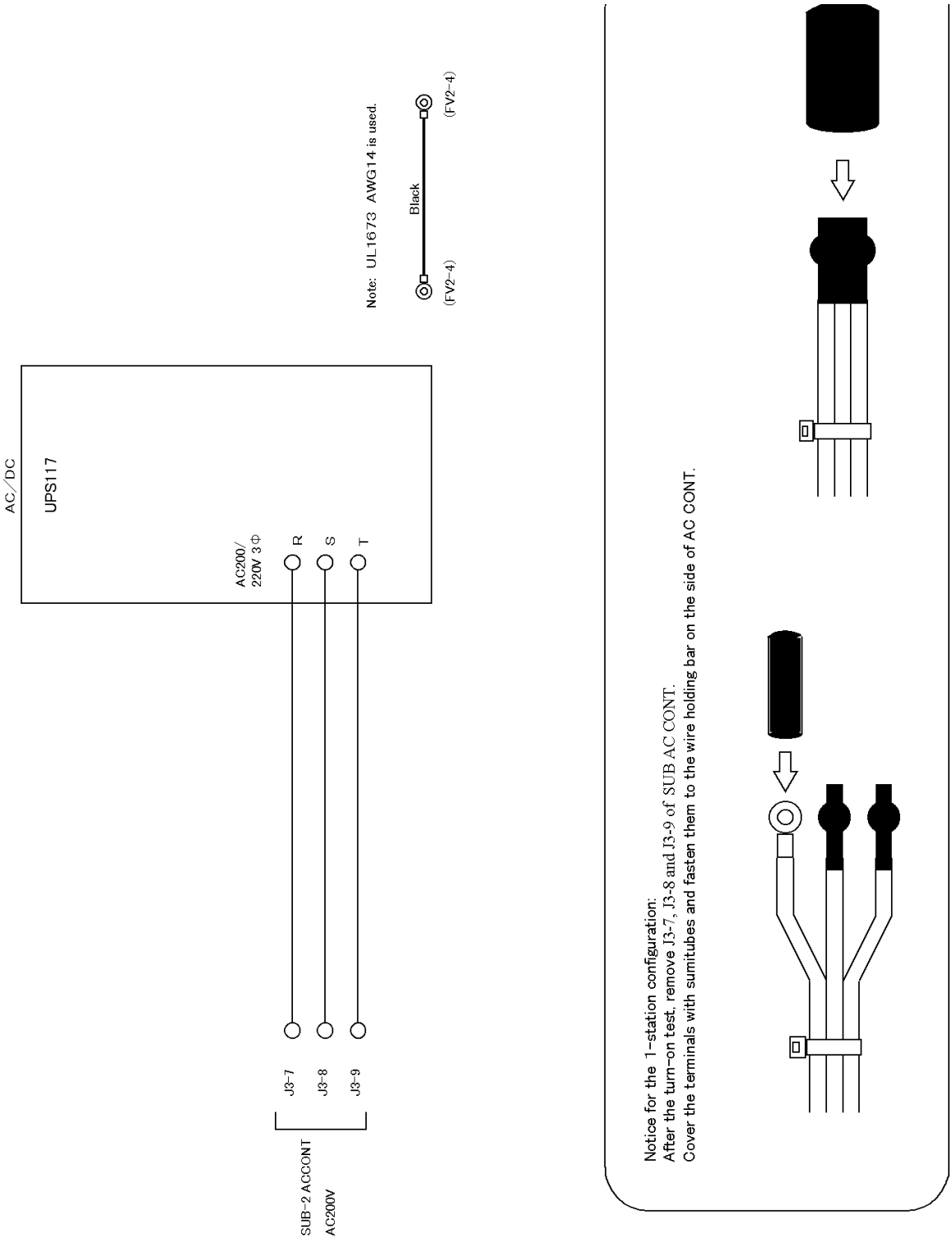

UPS117 ACDC 200VAC IN

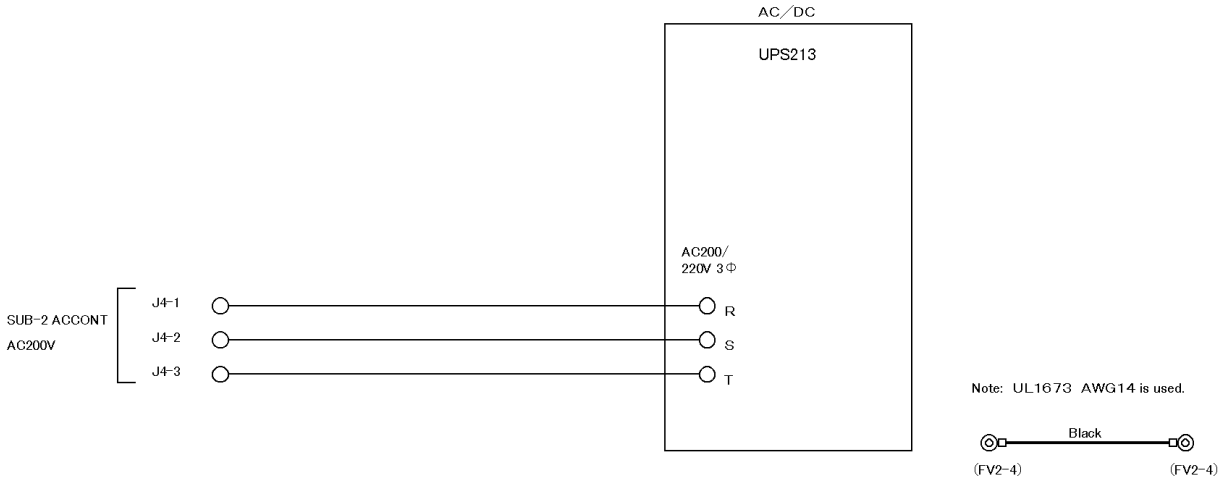

UPS213 ACDC 200VAC IN

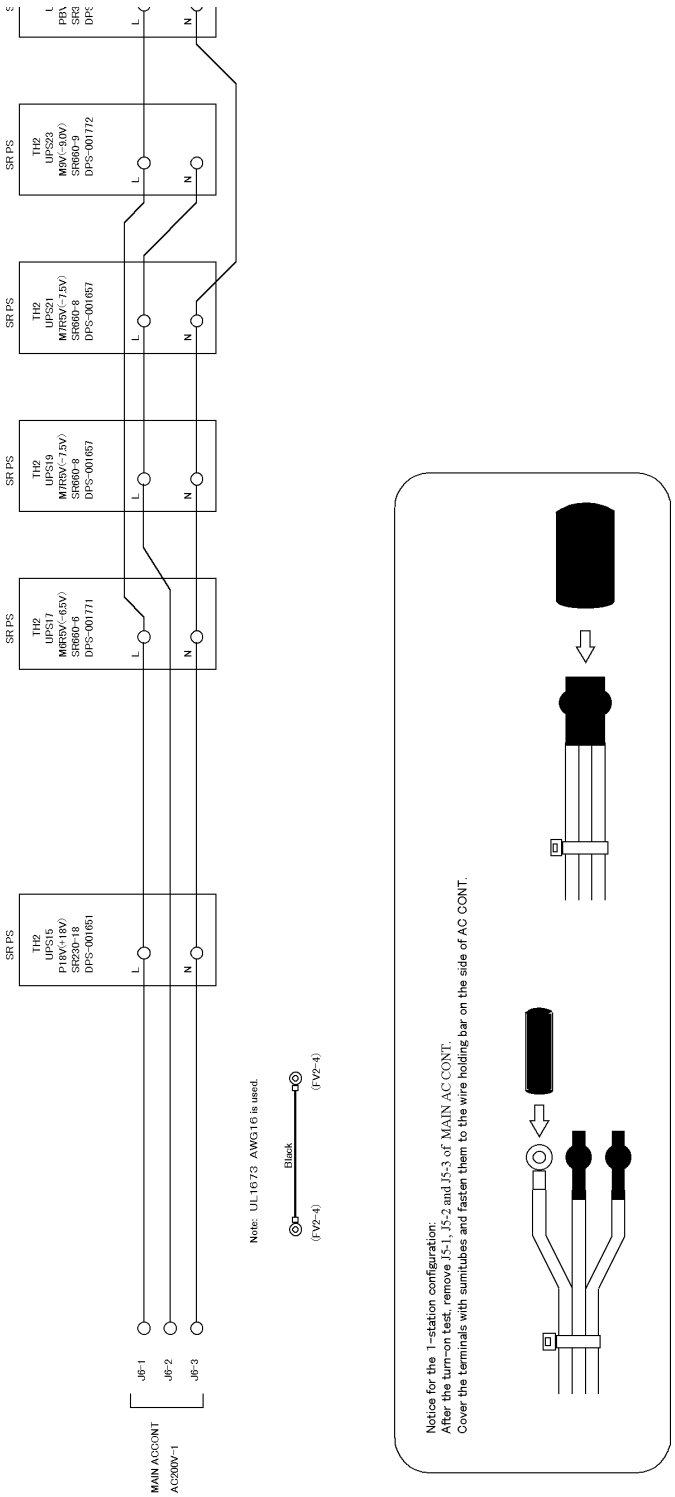

UPS15,17,19,21,23,25 SR Power Supply 200VAC IN

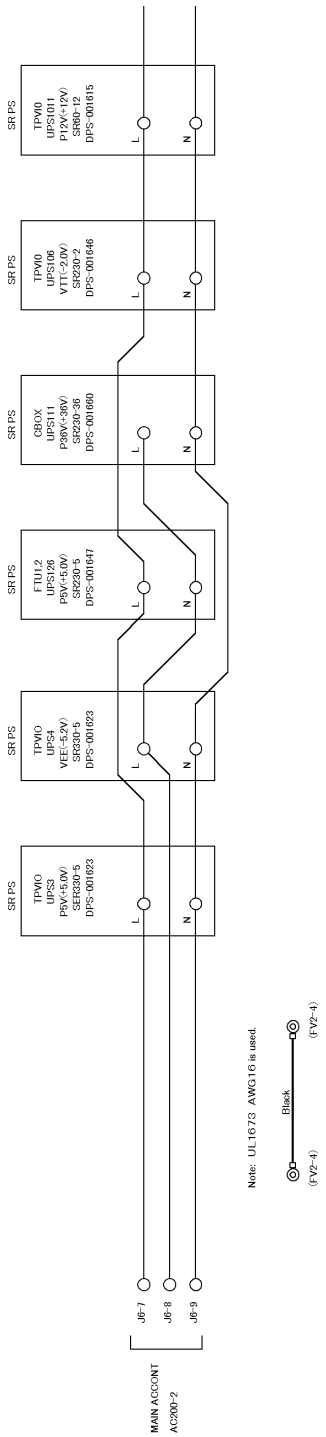

UPS126,111,106,1011,1012,3,4 SR Power Supply 200VAC IN

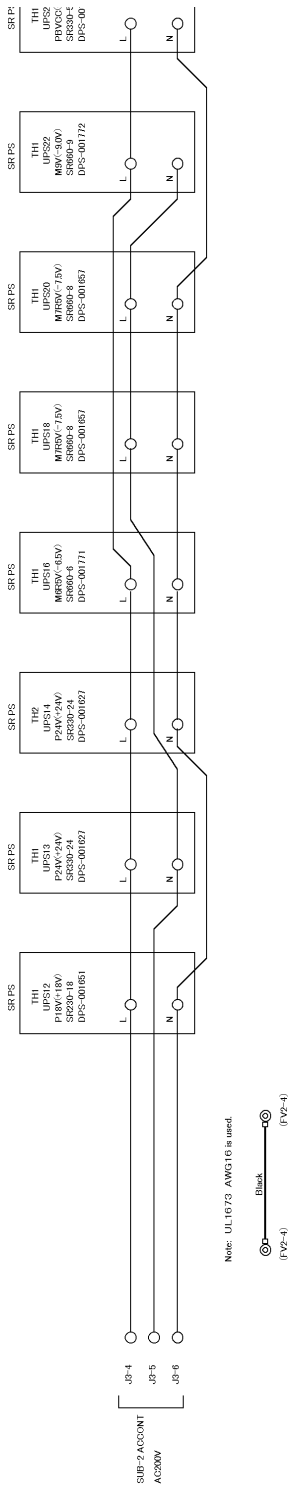

UPS12,13,14,16,18,20,22,24 SR Power Supply 200VAC IN

APPENDIX 3 MAINFRAME ASSEMBLY AND WIRING DIAGRAM

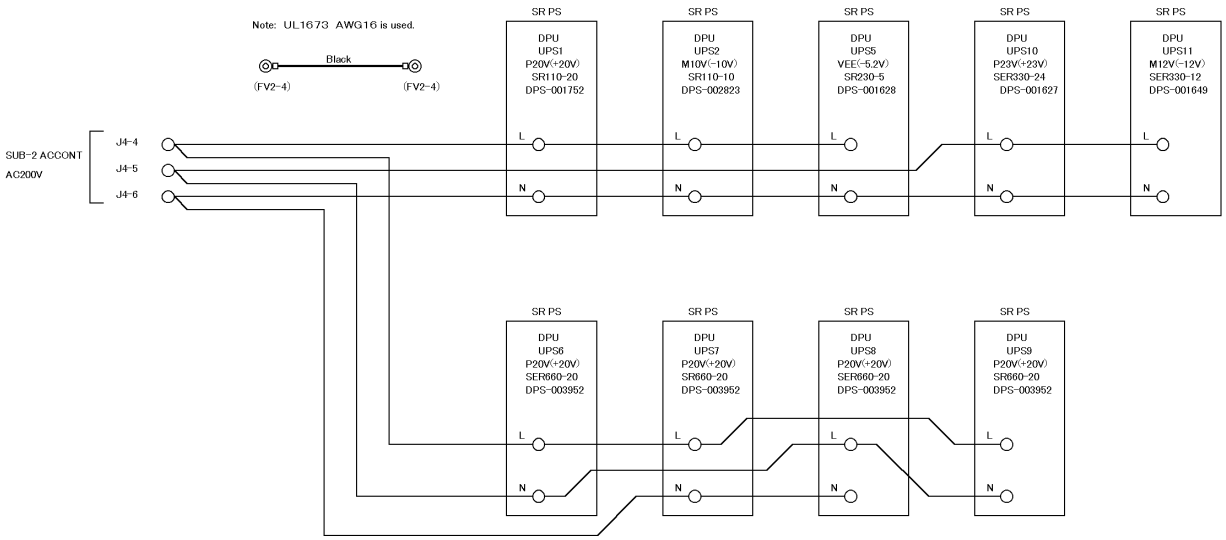

UPS1,2,5,10,11,6,7,8,9 SR Power Supply 200VAC IN

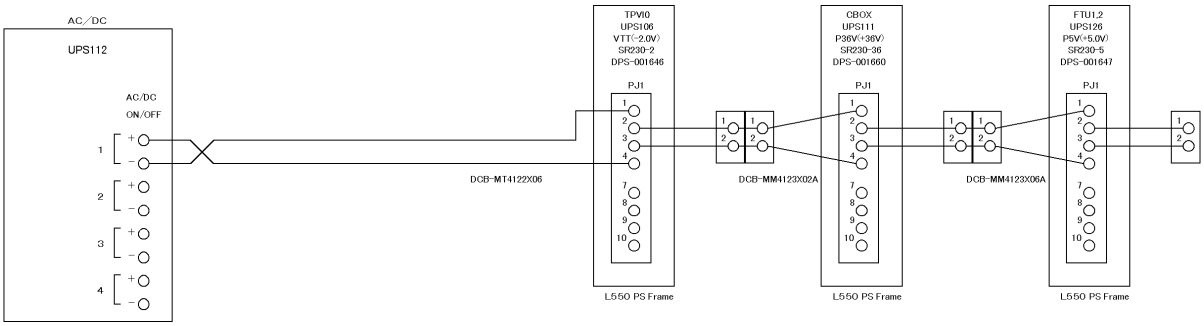

UPS106,UPS111,UPS126 ON/OFF

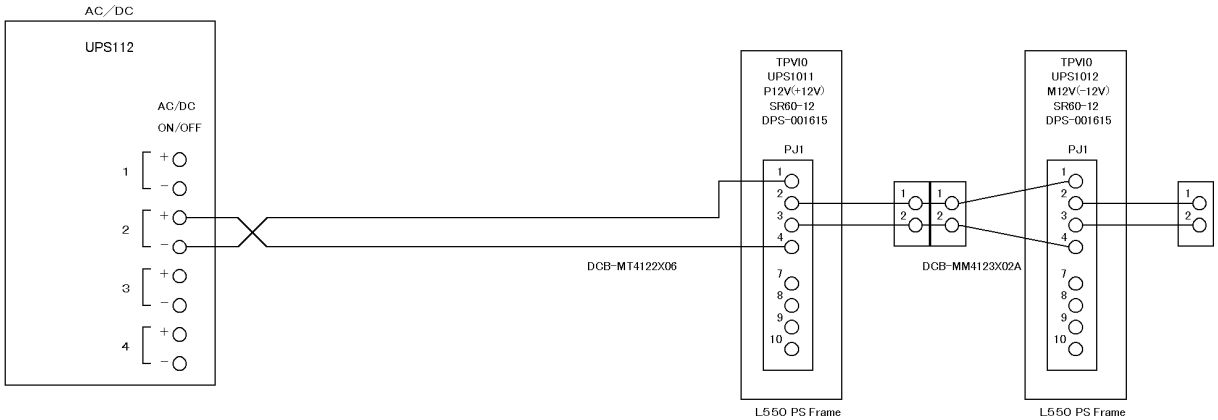

UPS1011,UPS1012 ON/OFF

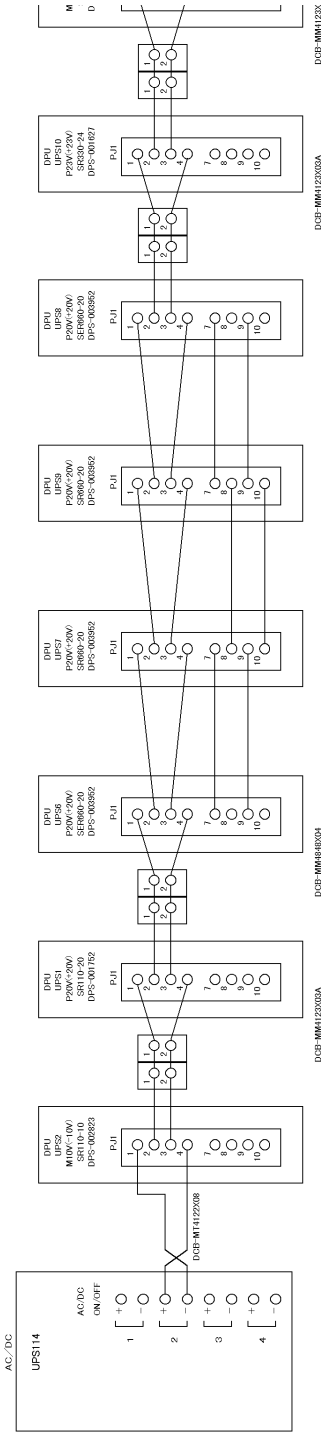

UPS1,UPS2,UPS6 to UPS11 ON/OFF

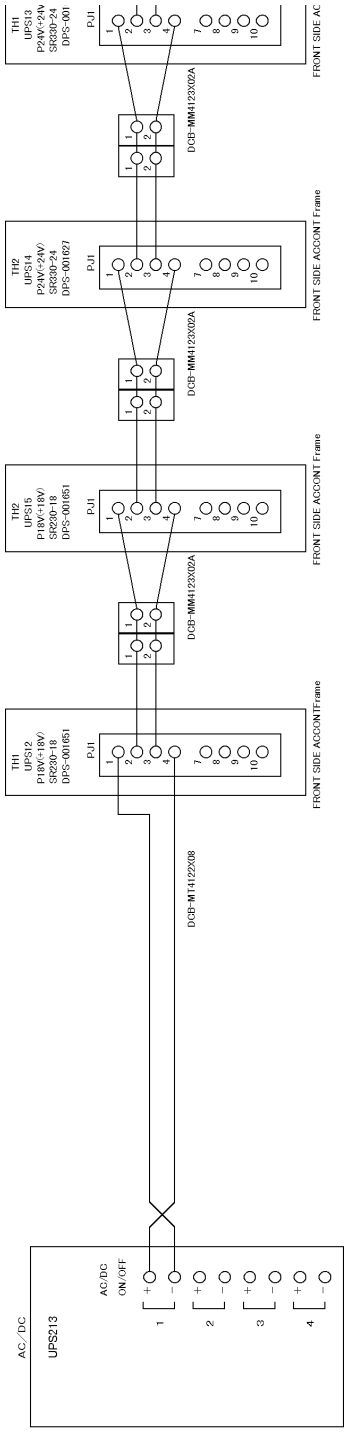

UPS12,UPS13,UPS14,UPS15 ON/OFF

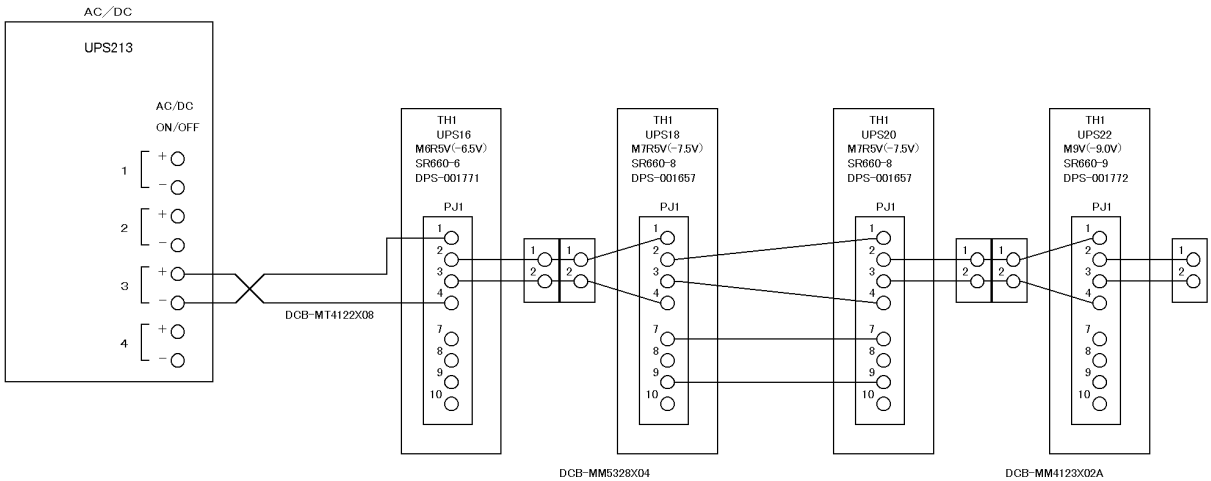

UPS16,UPS18,UPS20,UPS22 ON/OFF

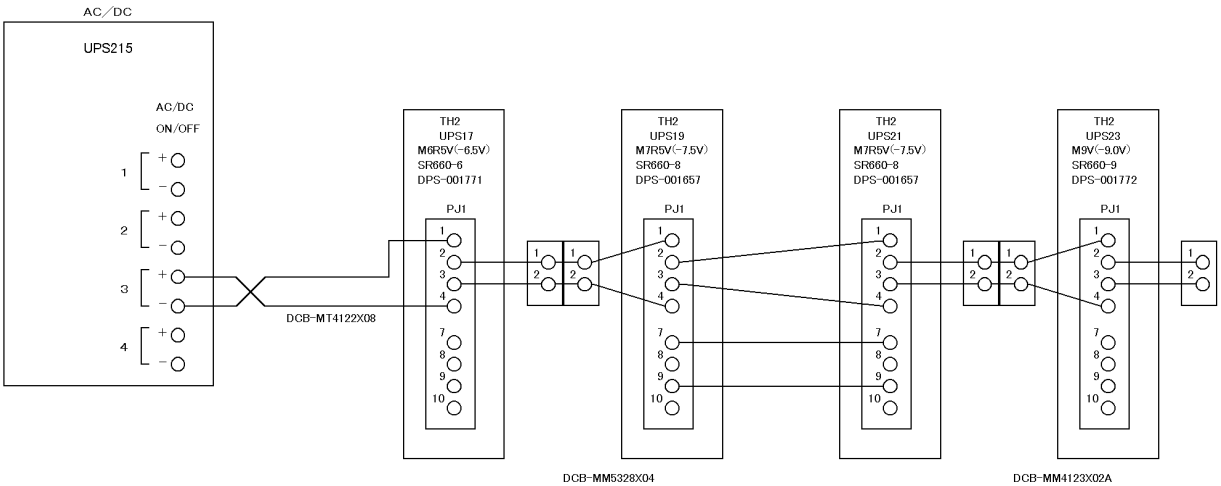

UPS17,UPS19,UPS21,UPS23 ON/OFF

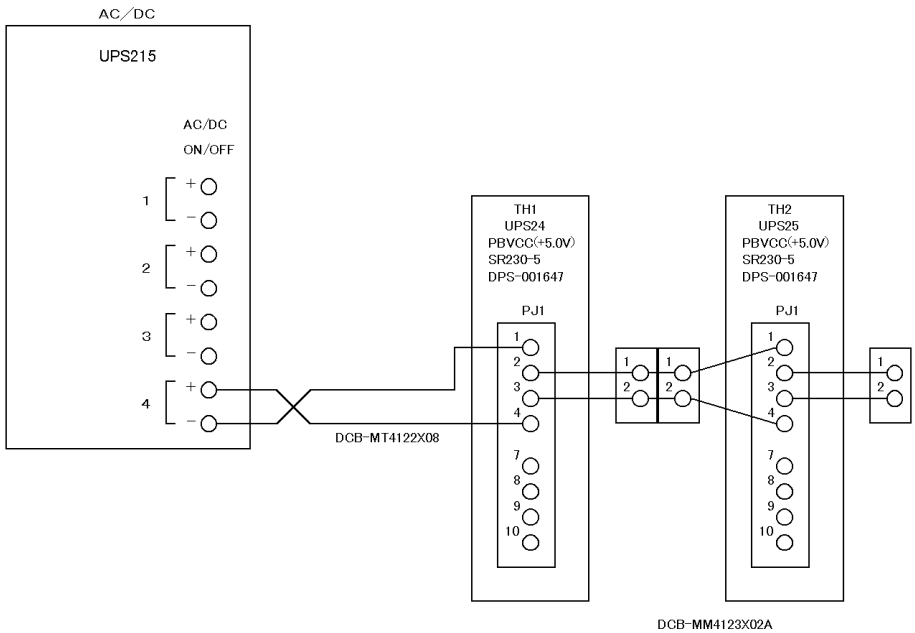

UPS24,UPS25 ON/OFF

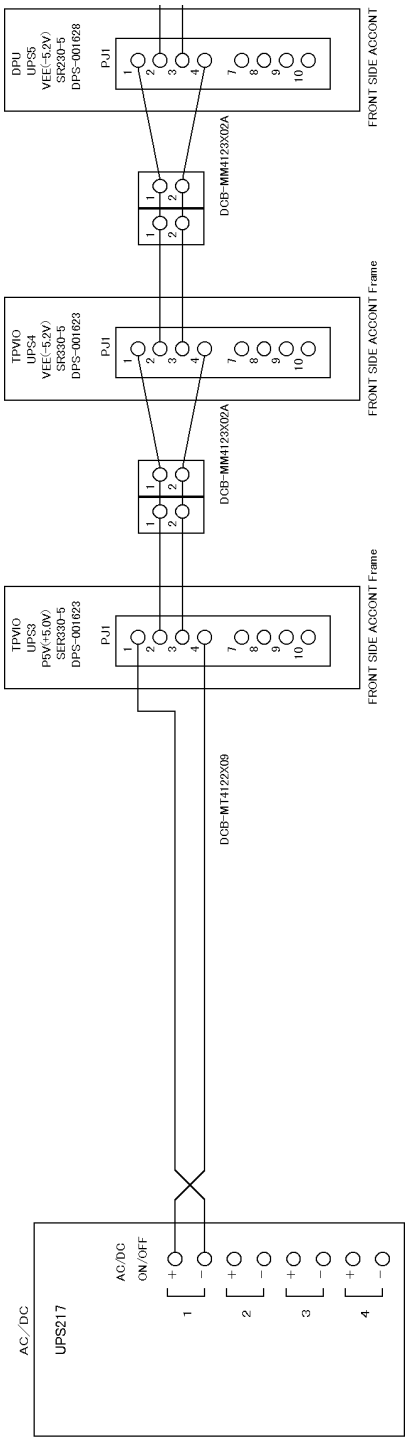

UPS3,UPS4,UPS5 ON/OFF

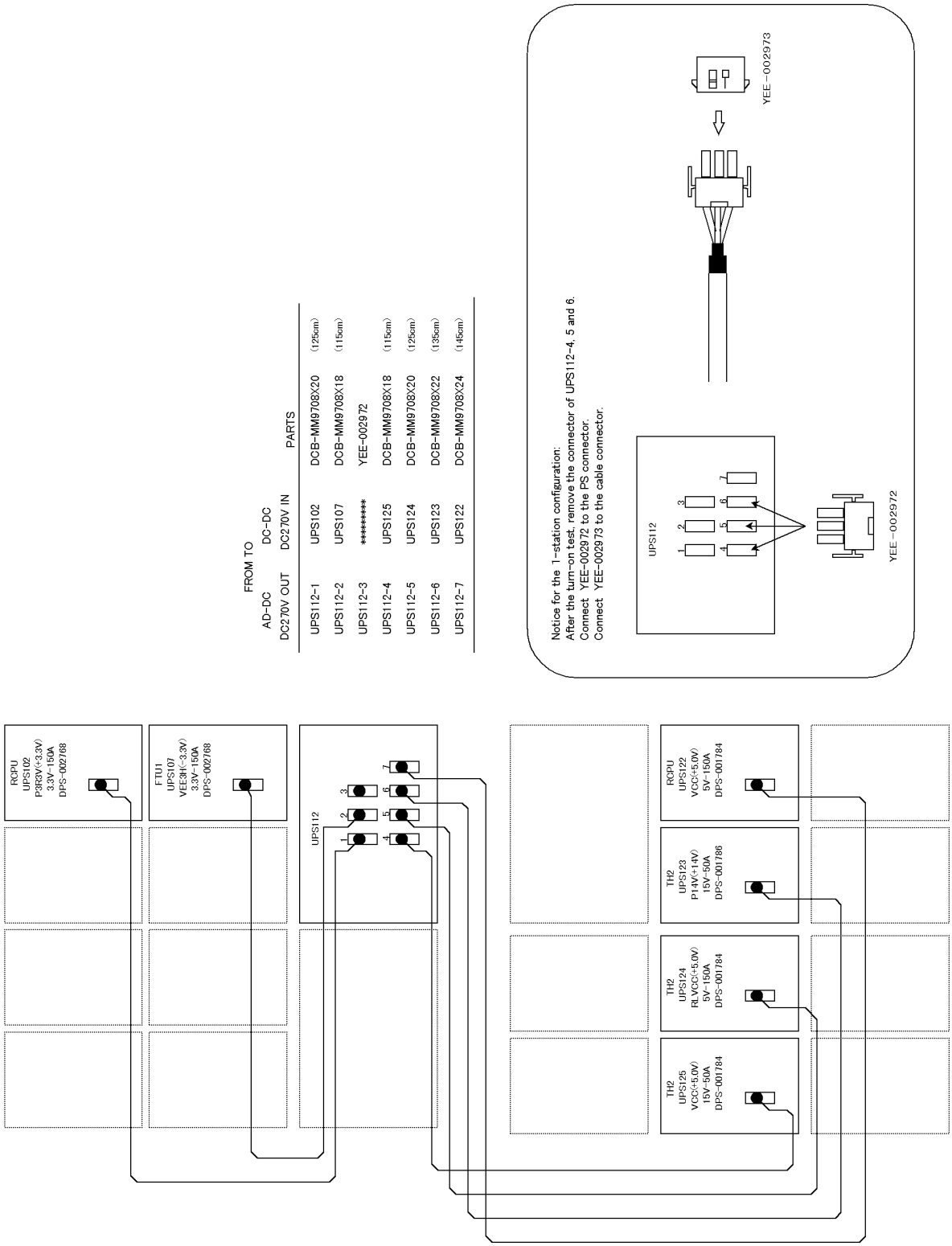

Rotary Base (Left) L550 (Upper) ACDC UPS112 270VDC Connection

FROM TO		PARTS	
AD-DC DC270V OUT	DC-DC DC270V IN		
UPS114-1	UPS105	DCB-MM9708X09	(70cm)
UPS114-2	UPS104	DCB-MM9708X12	(85cm)
UPS114-3	UPS103	DCB-MM9708X14	(95cm)
UPS114-4	UPS110	DCB-MM9708X05	(50cm)
UPS114-5	UPS109	DCB-MM9708X08	(65cm)
UPS114-6	UPS108	DCB-MM9708X10	(75cm)
UPS114-7	********	YEE-002972	

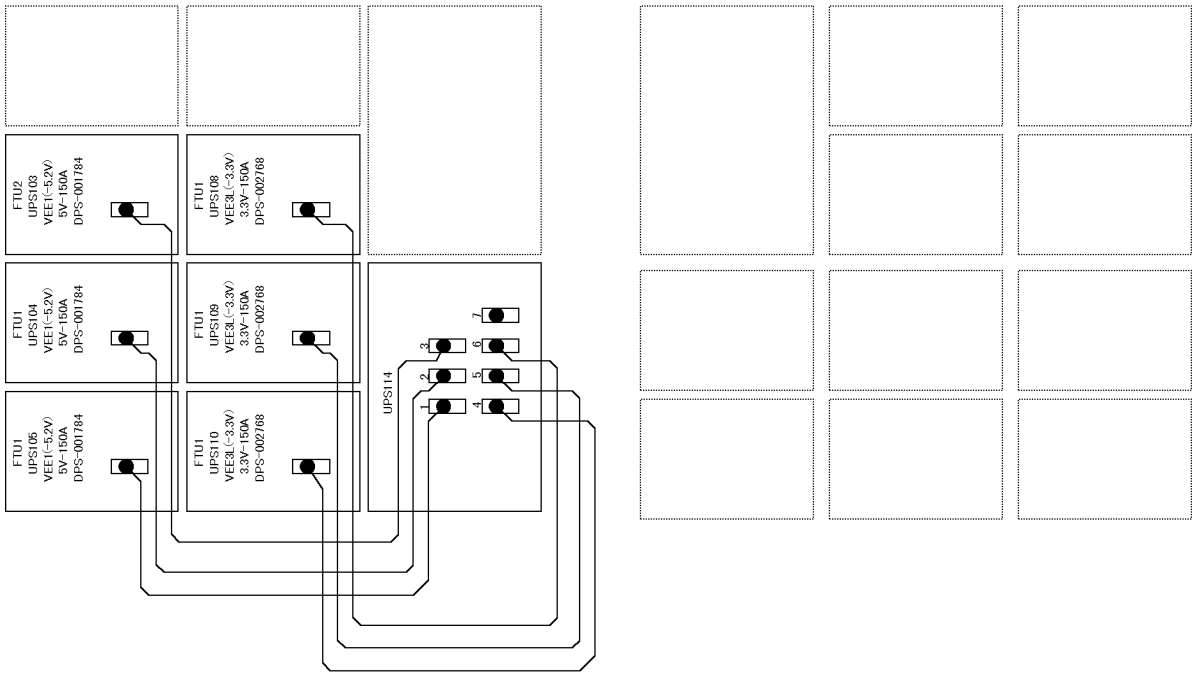

Rotary Base (Left) L550 (Upper) ACDC UPS114 270VDC Connection

FROM		TO		PARTS	
AD-DC	DC270V OUT	DC-DC	DC270V IN		
UPS117-1		UPS120		DCB-MM9708X05	(50cm)
UPS117-2		UPS119		DCB-MM9708X03	(40cm)
UPS117-3		*********		YEE-002972	
UPS117-4		UPS130		DCB-MM9708X13	(90cm)
UPS117-5		UPS129		DCB-MM9708X14	(95cm)
UPS117-6		UPS128		DCB-MM9708X18	(115cm)
UPS117-7		UPS127		DCB-MM9708X20	(125cm)

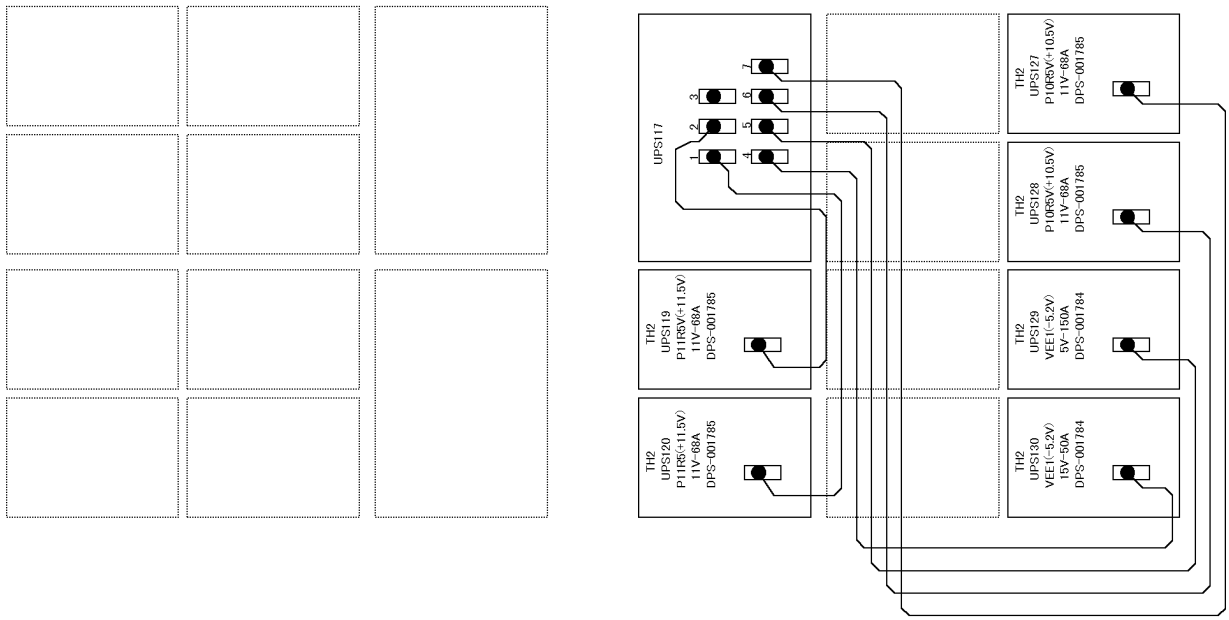

Rotary Base (Left) L550 (Lower) ACDC UPS117 270VDC Connection

FROM	TO		PARTS	
AD-DC DC270V OUT	DC-DC DC270V IN			
UPS213-1	UPS206	DCB-MM9708X21	(130cm)
UPS213-2	UPS205	DCB-MM9708X19	(120cm)
UPS213-3	UPS212	DCB-MM9708X16	(105cm)
UPS213-4	UPS210	DCB-MM9708X12	(85cm)
UPS213-5	UPS209	DCB-MM9708X10	(75cm)
UPS213-6	UPS208	DCB-MM9708X08	(65cm)
UPS213-7	UPS207	DCB-MM9708X06	(55cm)

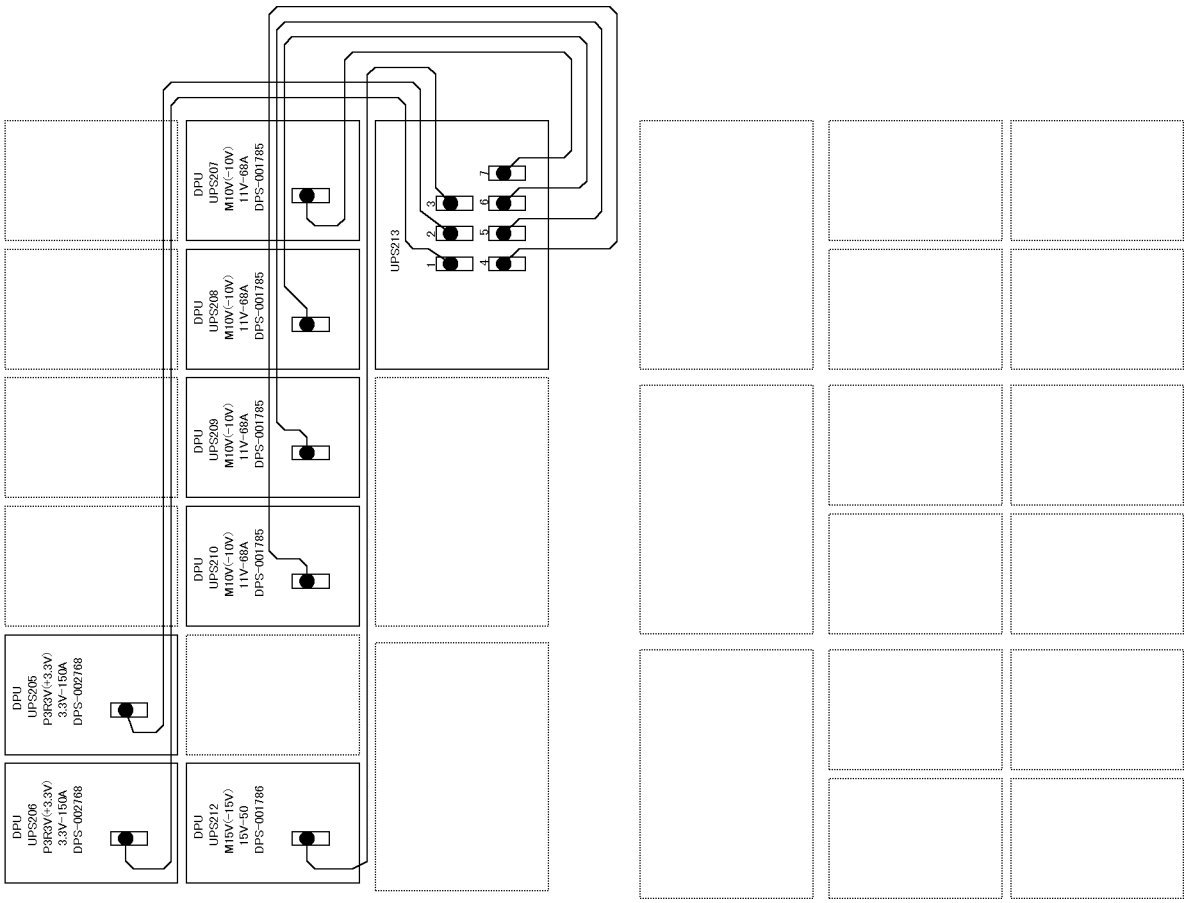

Rotary Base (Right) R650 (Upper) ACDC UPS213 270VDC Connection

FROM	TO	PARTS	
AD-DC DC270V OUT	DC-DC DC270V IN		
UPS215-1	UPS204	DCB-MM9708X21	(130cm)
UPS215-2	UPS203	DCB-MM9708X19	(120cm)
UPS215-3	UPS202	DCB-MM9708X17	(110cm)
UPS215-4	UPS201	DCB-MM9708X16	(105cm)
UPS215-5	UPS211	DCB-MM9708X19	(120cm)
UPS215-6	UPS224	DCB-MM9708X13	(90cm)
UPS215-7	UPS223	DCB-MM9708X14	(95cm)

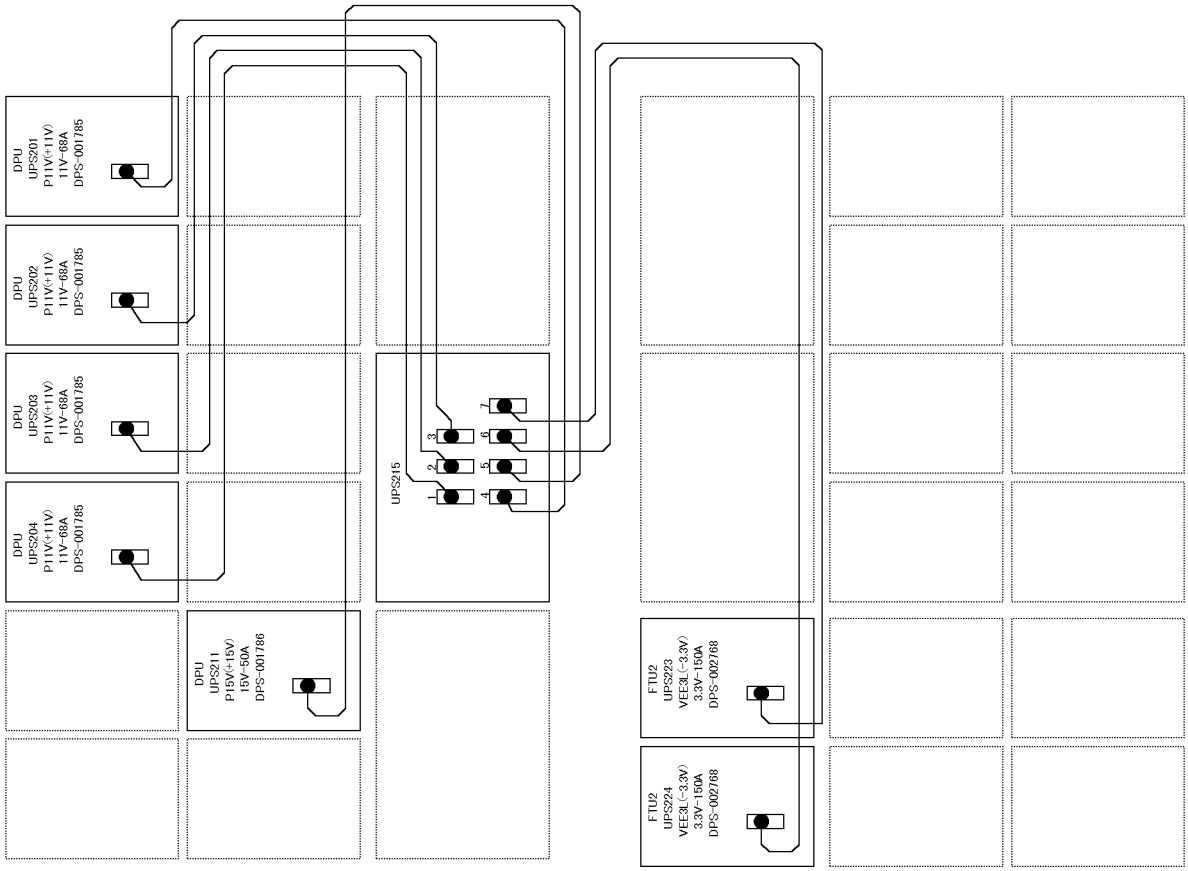

Rotary Base (Right) R650 (Upper) ACDC UPS215 270VDC Connection

FROM TO		PARTS	
AD-DC	DC-DC		
DC270V OUT	DC270V IN		
UPS217-1	UPS229	DCB-MM9708X13	(90cm)
UPS217-2	UPS227	DCB-MM9708X20	(125cm)
UPS217-3	UPS226	DCB-MM9708X24	(145cm)
UPS217-4	UPS225	DCB-MM9708X24	(145cm)
UPS217-5	UPS236	DCB-MM9708X15	(100cm)
UPS217-6	UPS235	DCB-MM9708X17	(110cm)
UPS217-7	********	YEE-002972	

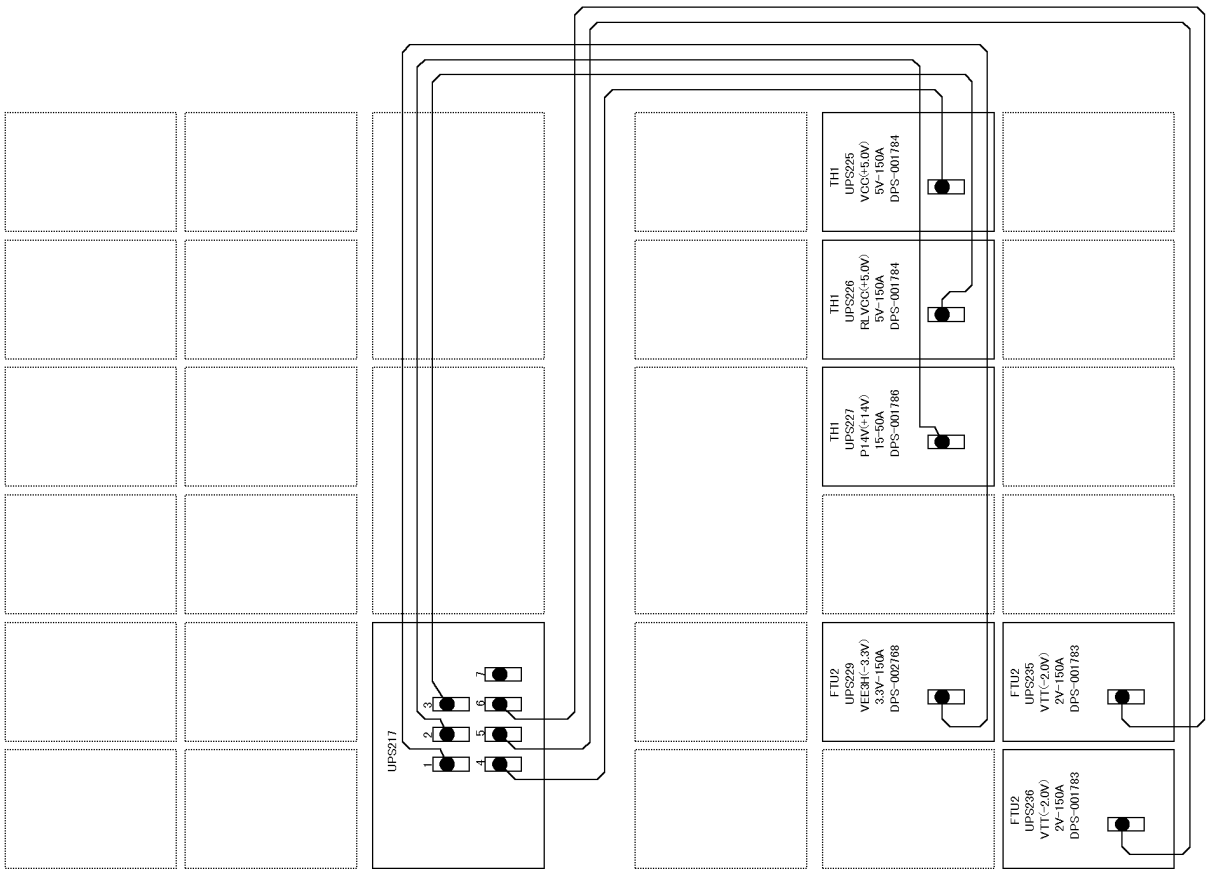

Rotary Base (Right) R650 (Right) ACDC UPS217 270VDC Connection

FROM	TO	PARTS	
AD-DC DC270V OUT	DC-DC DC270V IN		
UPS221-1	UPS220	DCB-MM9708X03	(40cm)
UPS221-2	UPS219	DCB-MM9708X05	(50cm)
UPS221-3	UPS228	DCB-MM9708X16	(105cm)
UPS221-4	UPS234	DCB-MM9708X22	(135cm)
UPS221-5	UPS233	DCB-MM9708X20	(125cm)
UPS221-6	UPS232	DCB-MM9708X18	(115cm)
UPS221-7	UPS231	DCB-MM9708X16	(105cm)

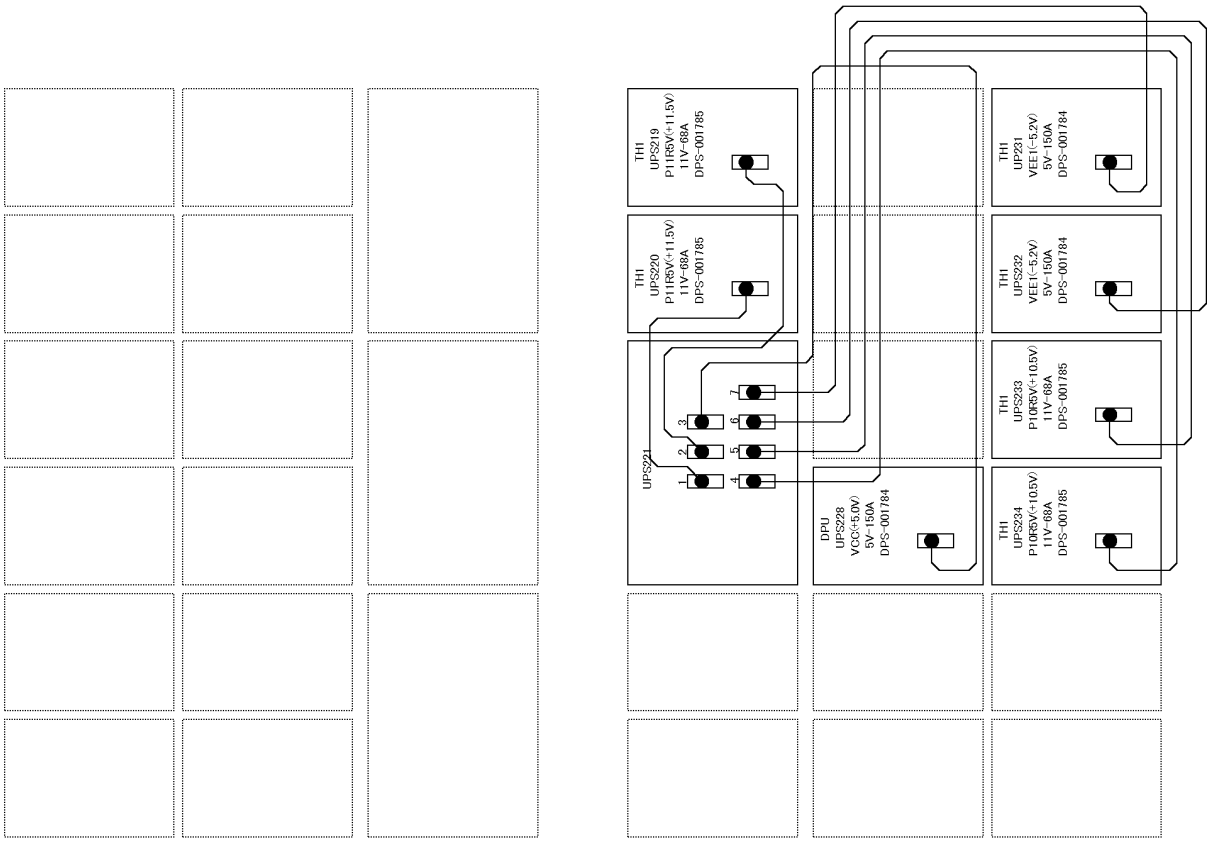

Rotary Base (Right) R650 (Lower) ACDC UPS221 270VDC Connection

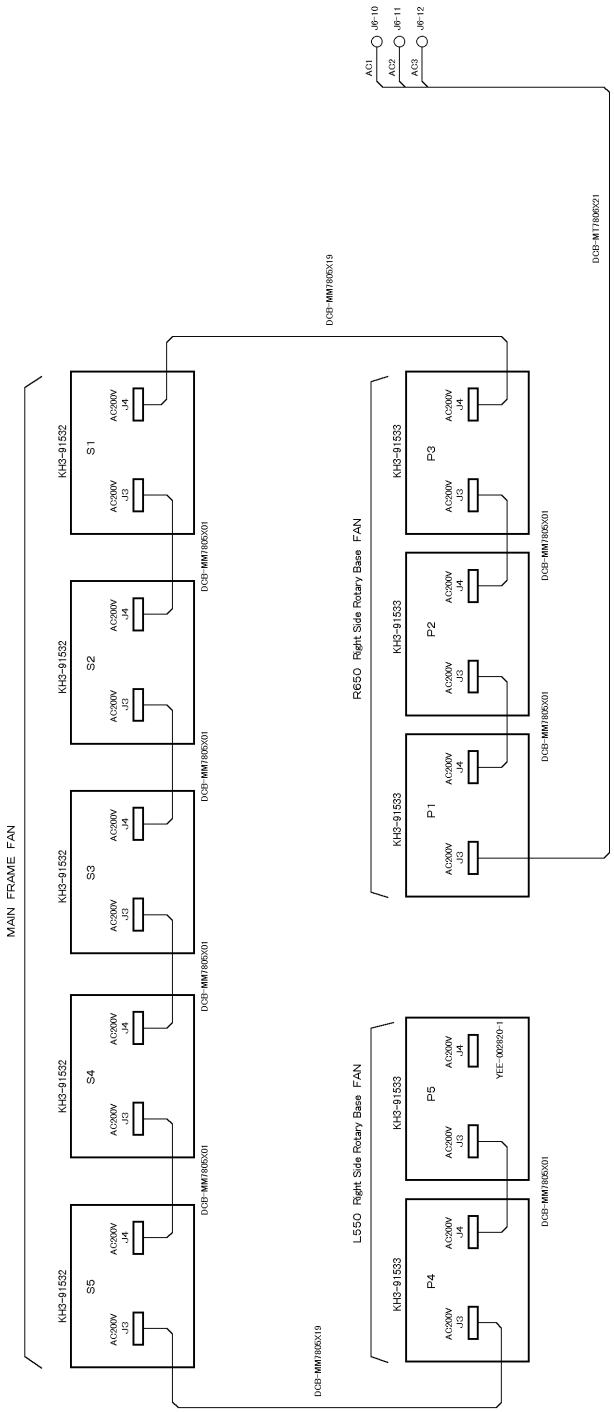

L550, R650, MAINFRAME FAN 200VAC SUPPLY (1/2)
(When the transformer unit code is KH3-71150)

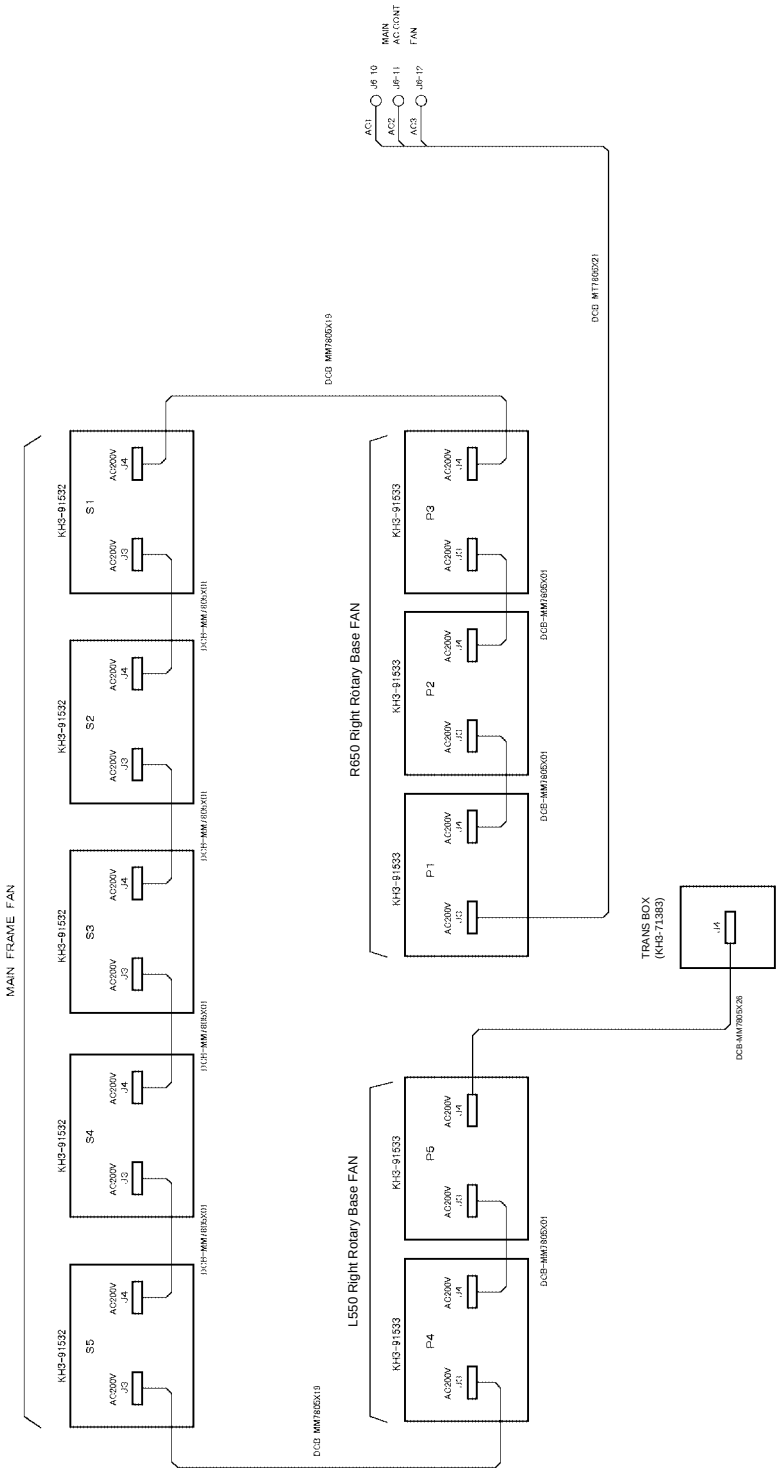

L550, R650, MAINFRAME FAN 200VAC SUPPLY (2/2)
(When the transformer unit code is KH3-71383)

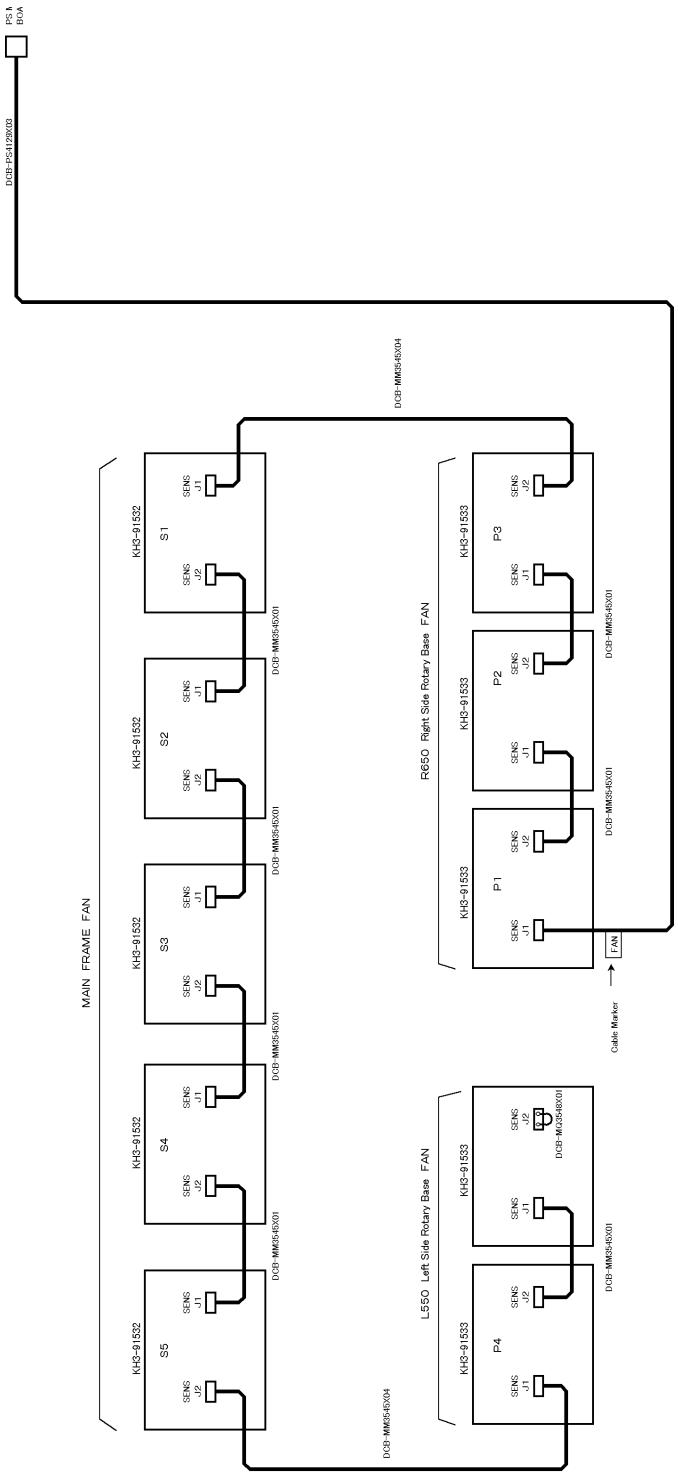

L550, R650, MAINFRAME FAN SENSOR LINE (1/2)
(When the transformer unit code is KH3-71150)

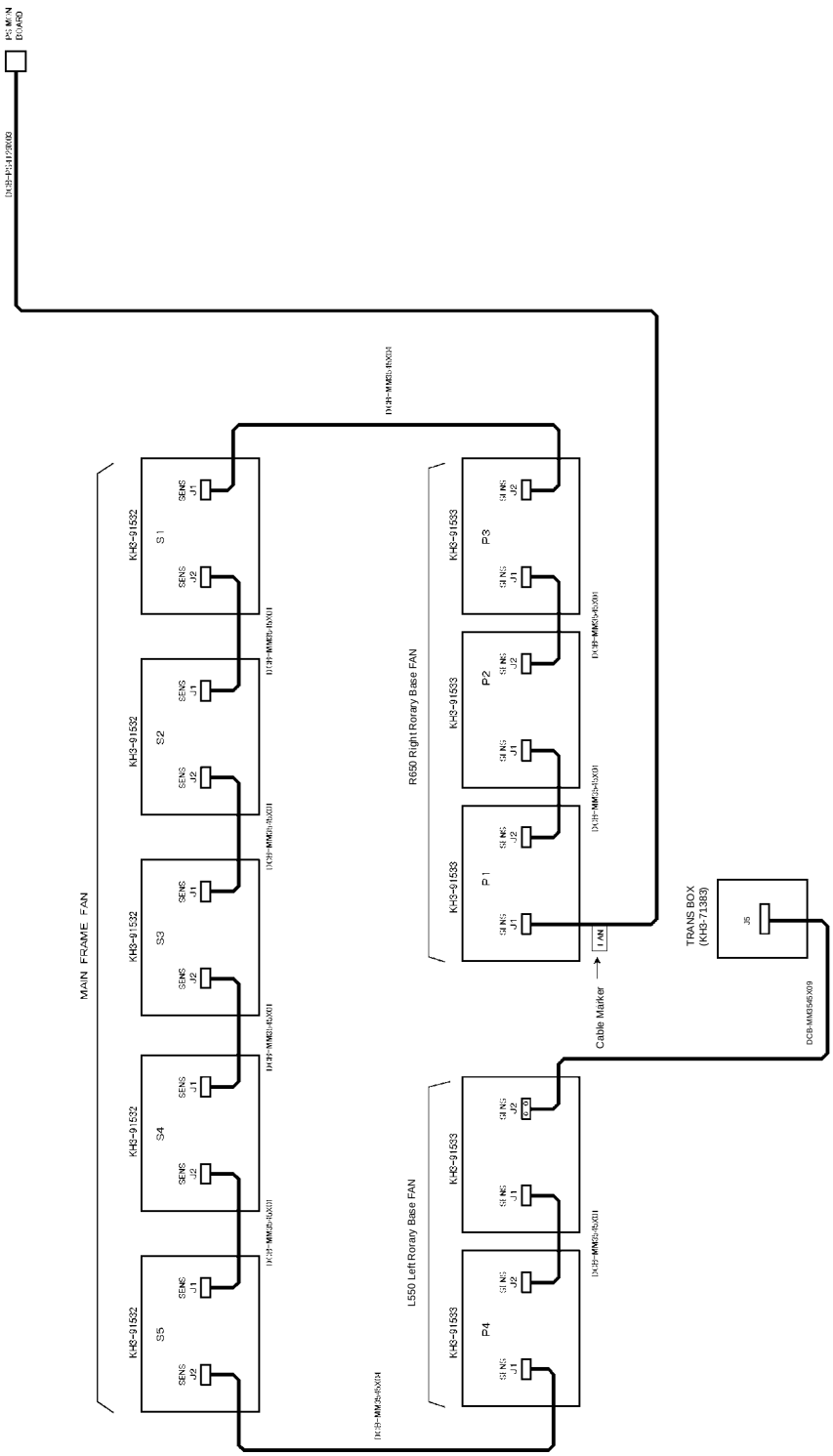

L550, R650, MAINFRAME TEMP SENSOR LINE (2/2)
(When the transformer unit code is KH3-71383)

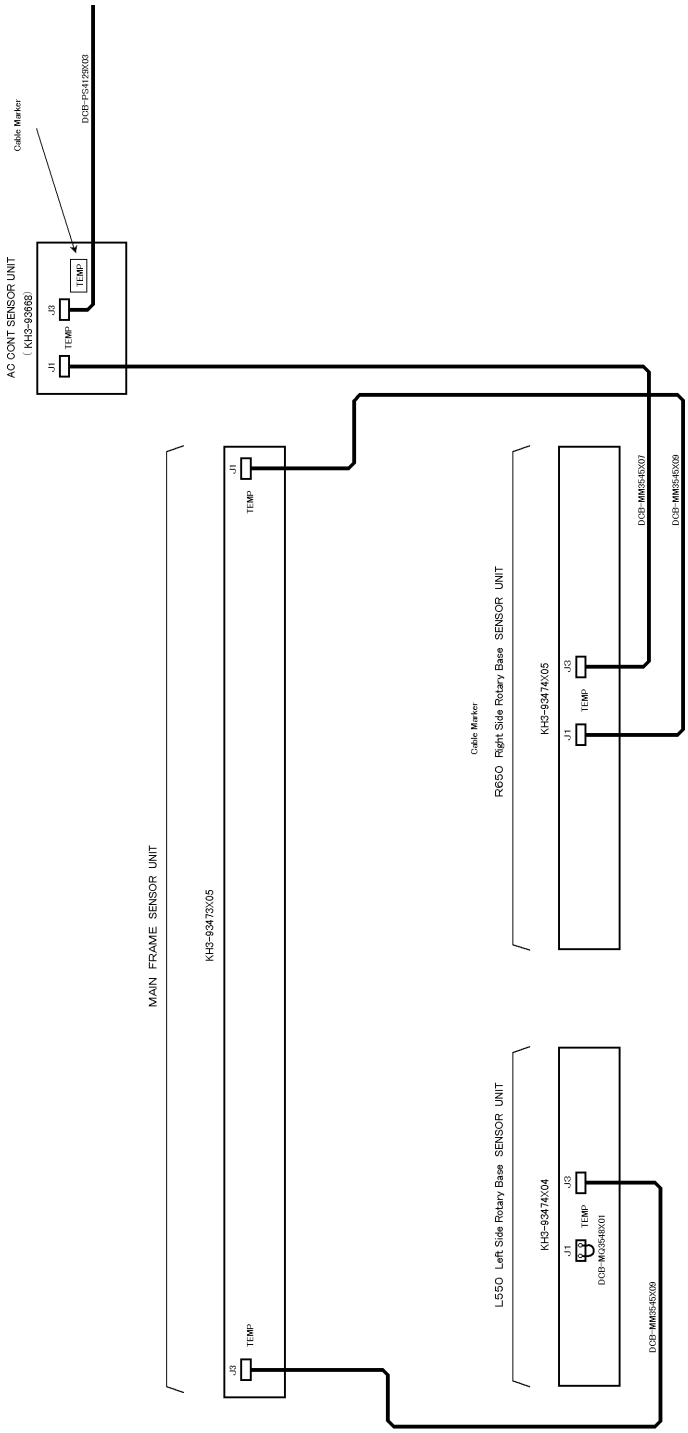

L550, R650, MAINFRAME TEMP SENSOR LINE

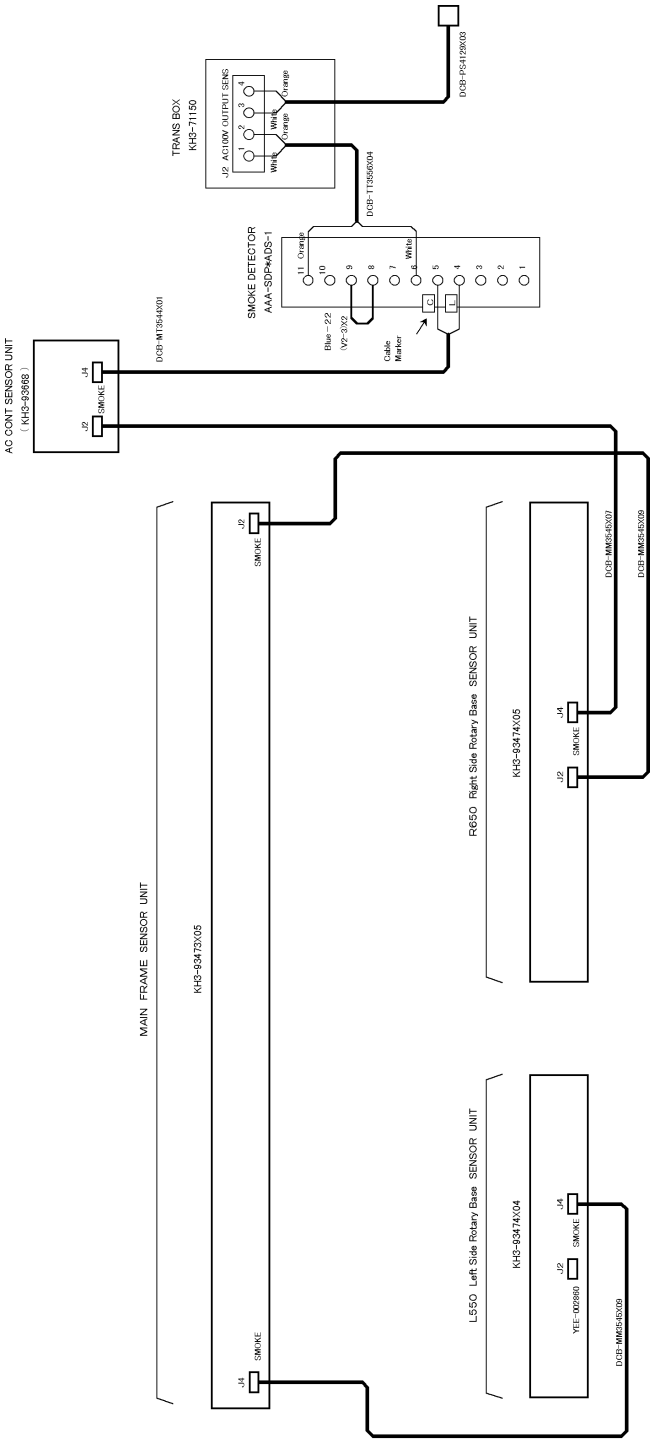

L550, R650, MAINFRAME SMOKE SENSOR LINE (1/2)
(When the transformer unit code is KH3-71150)

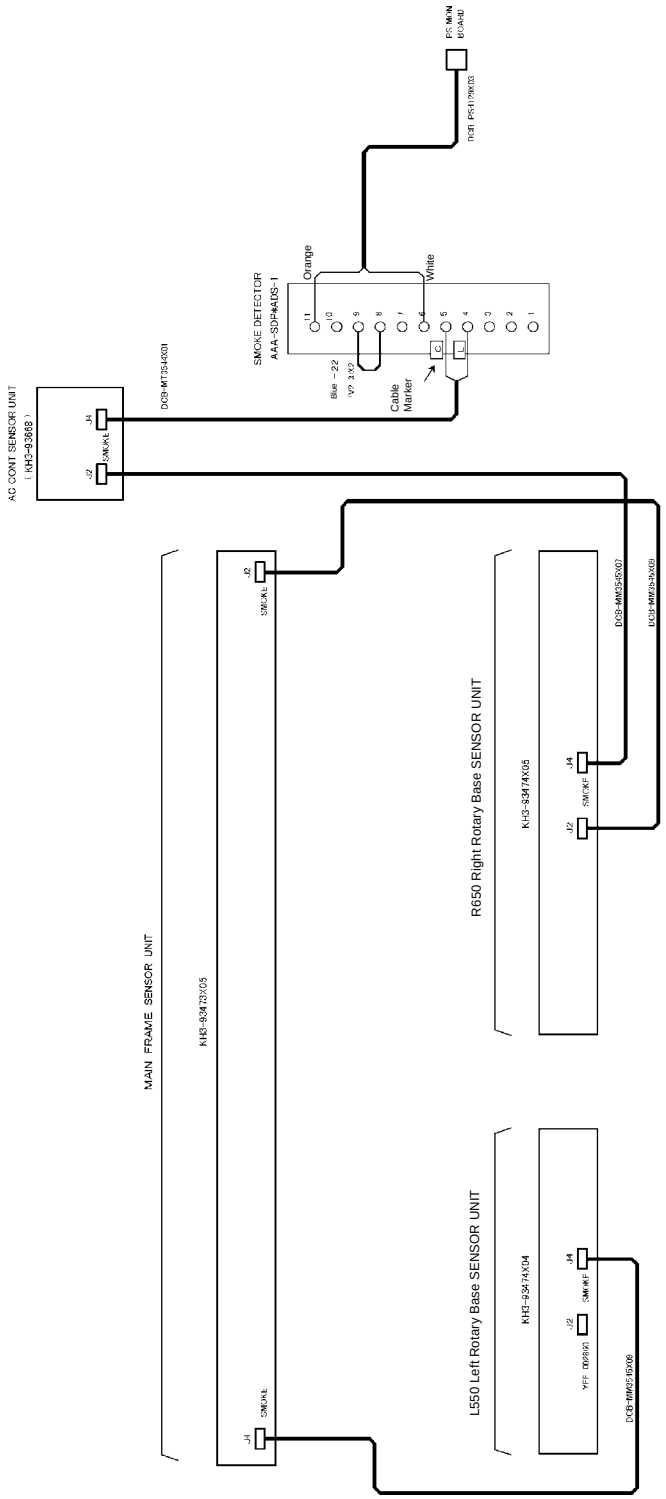

L550, R650, MAINFRAME SMOKE SENSOR LINE (2/2)
(When the transformer unit code is KH3-71383)

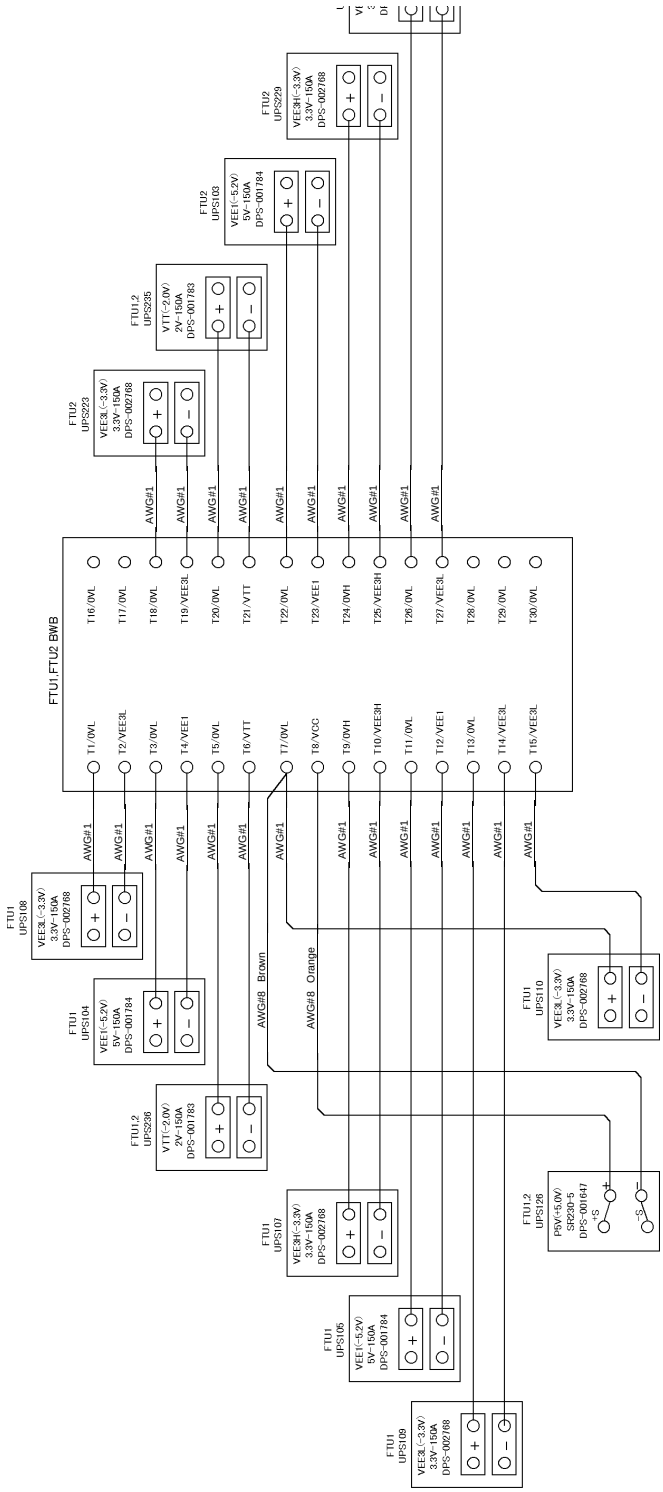

FTU BWB DC Connection (1/1)

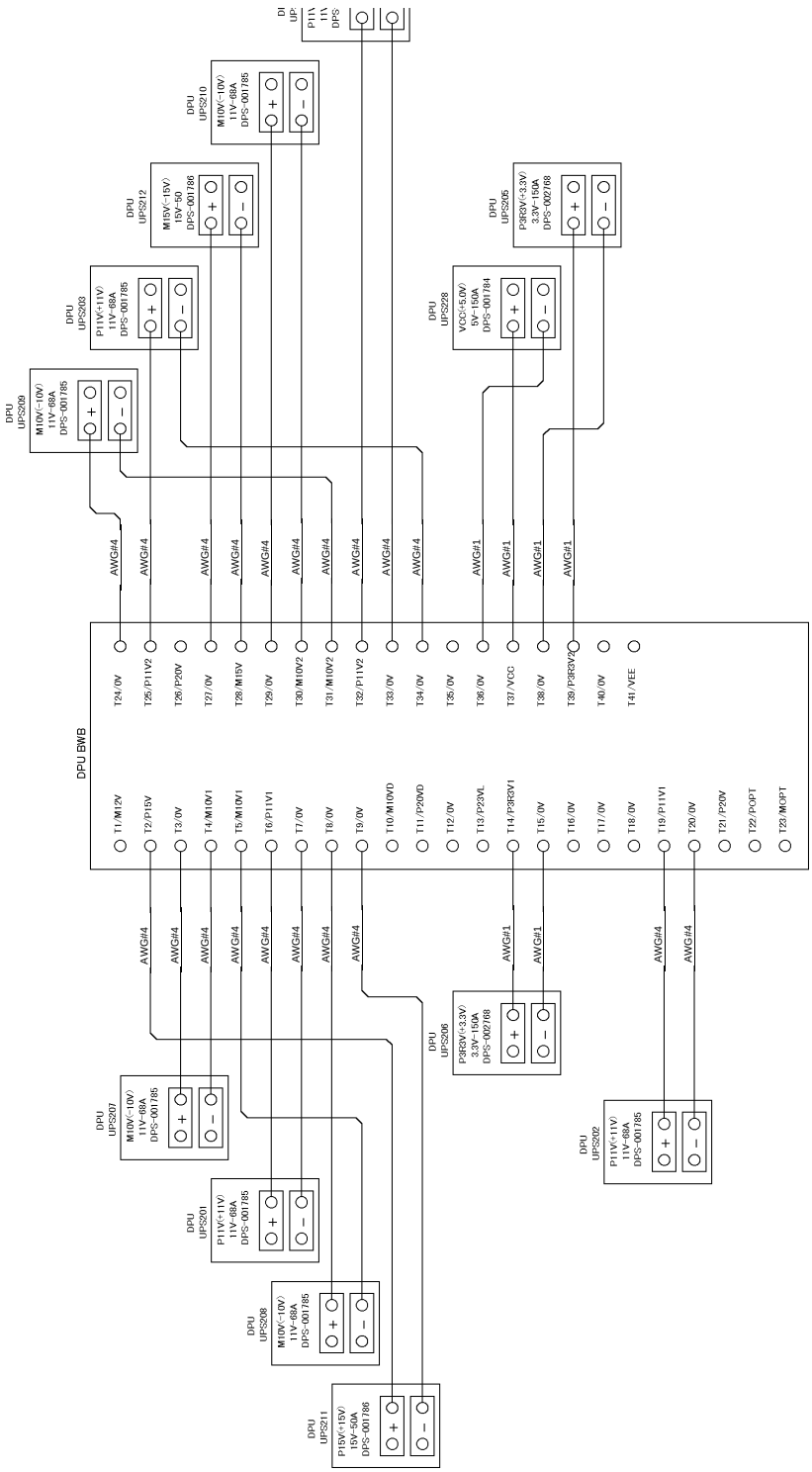

DPU BWB DC Connection (1/2)

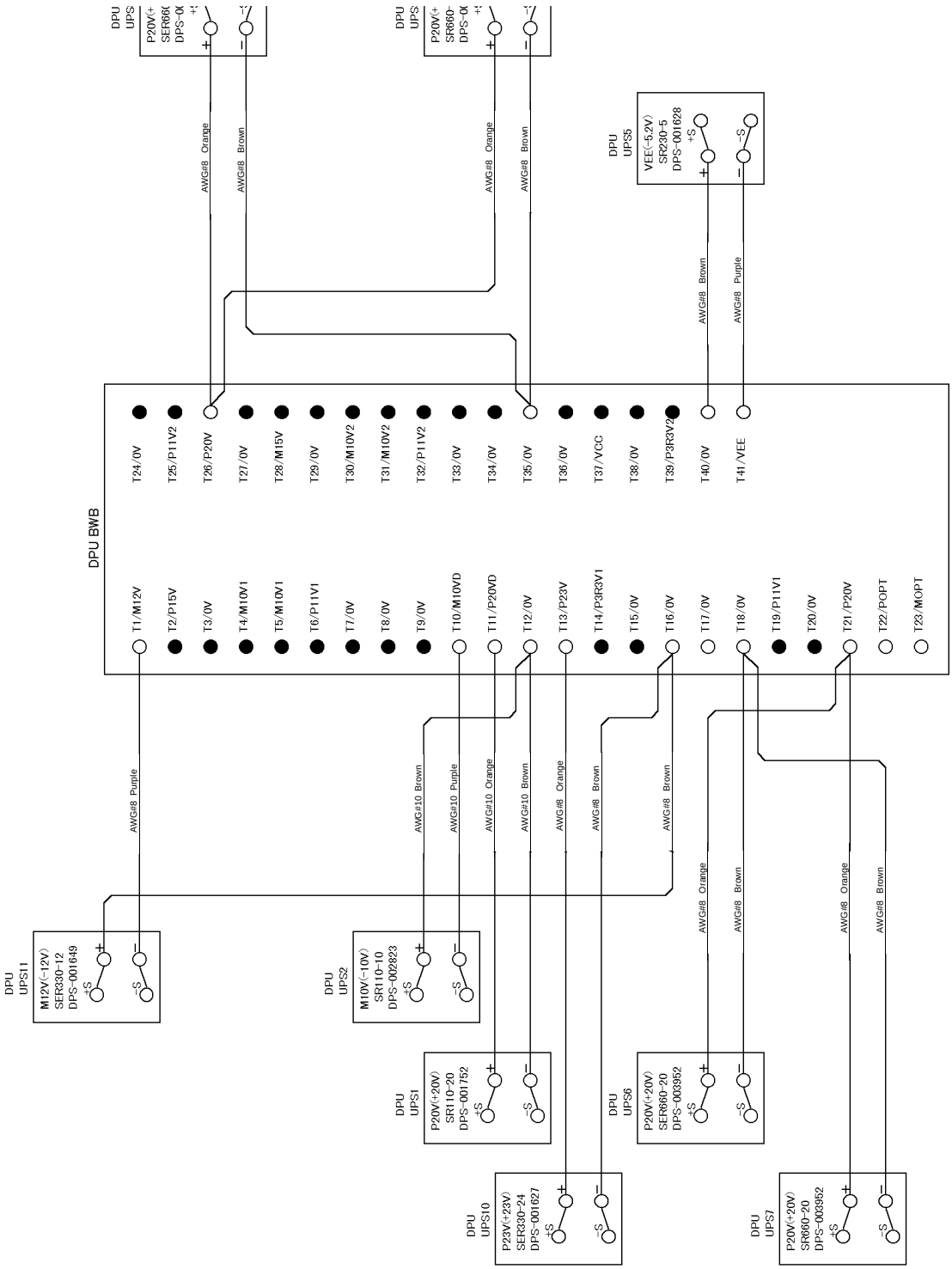

DPU BWB DC Connection (2/2)

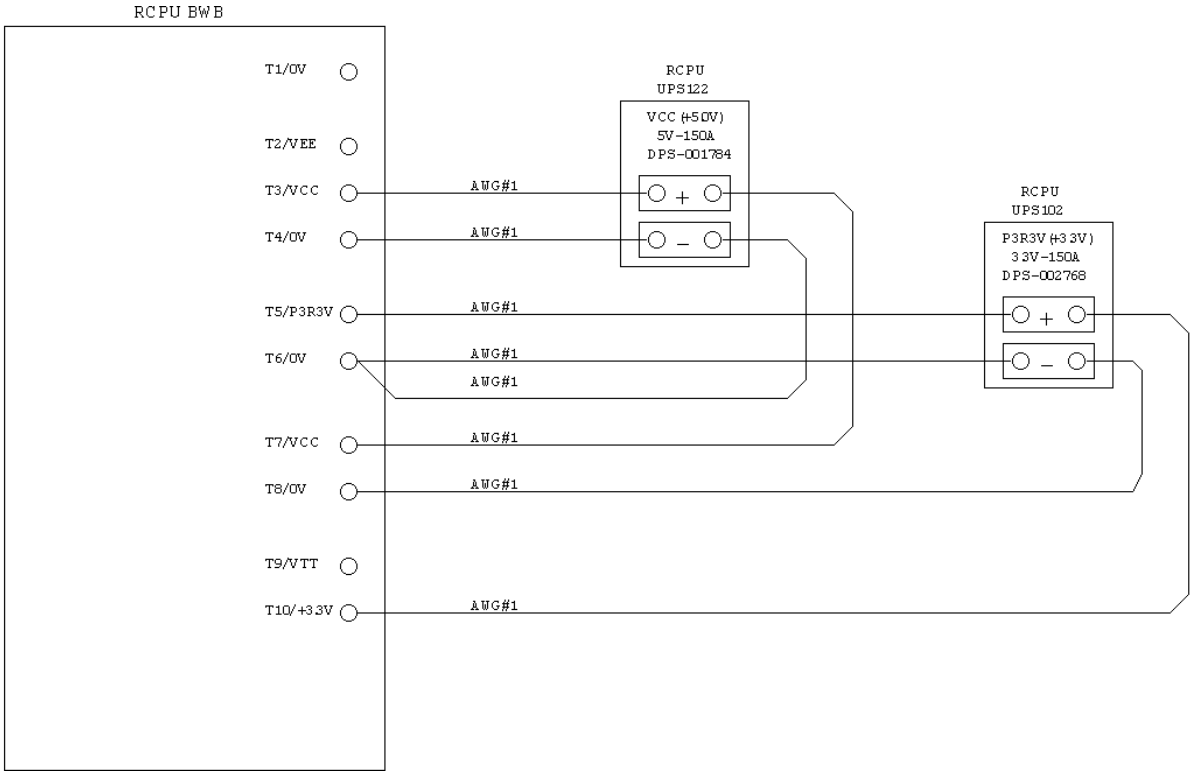

RCPU BWB DC Connection (1/1)

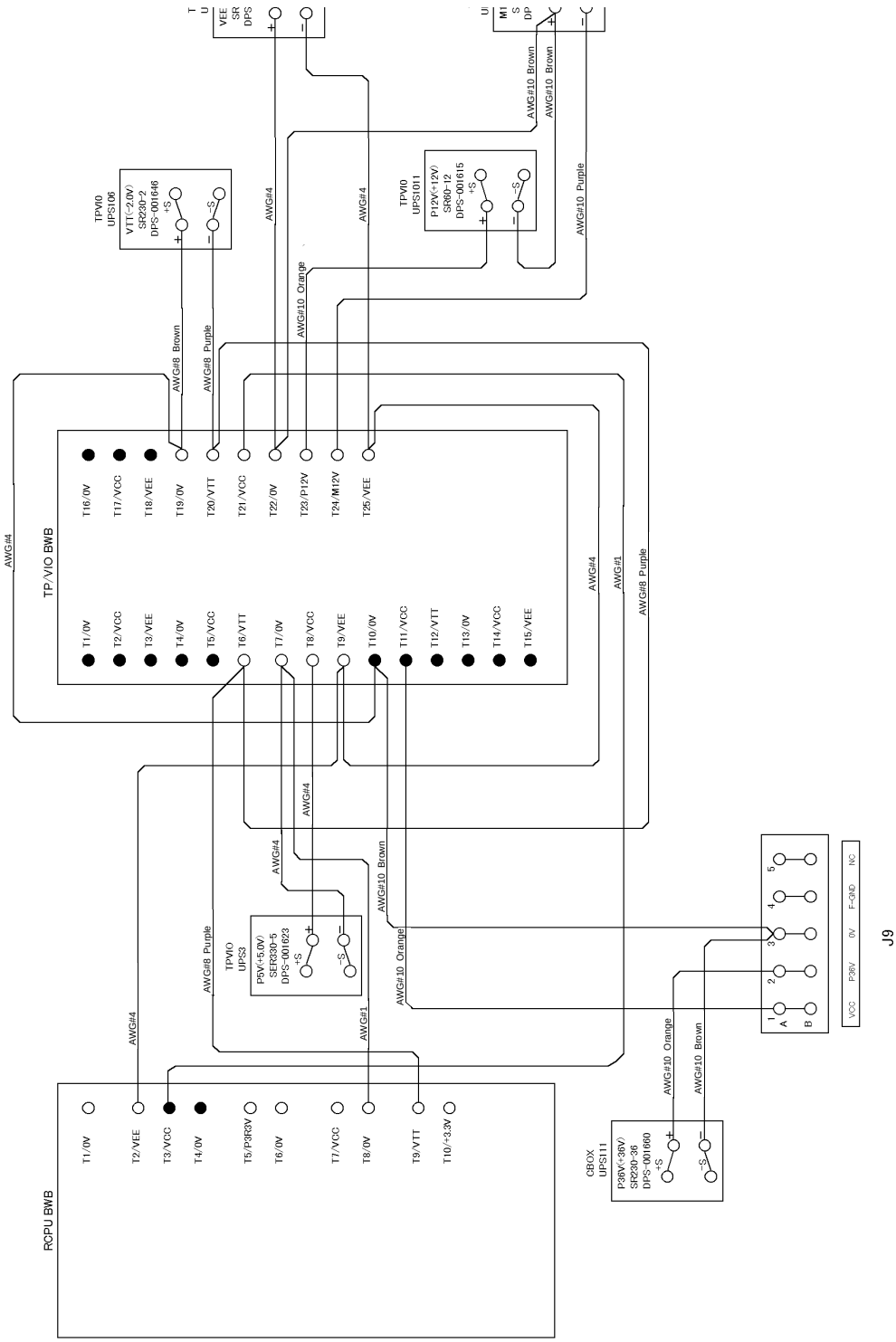

TPVIO BWB, CBOX DC Connection (1/1)

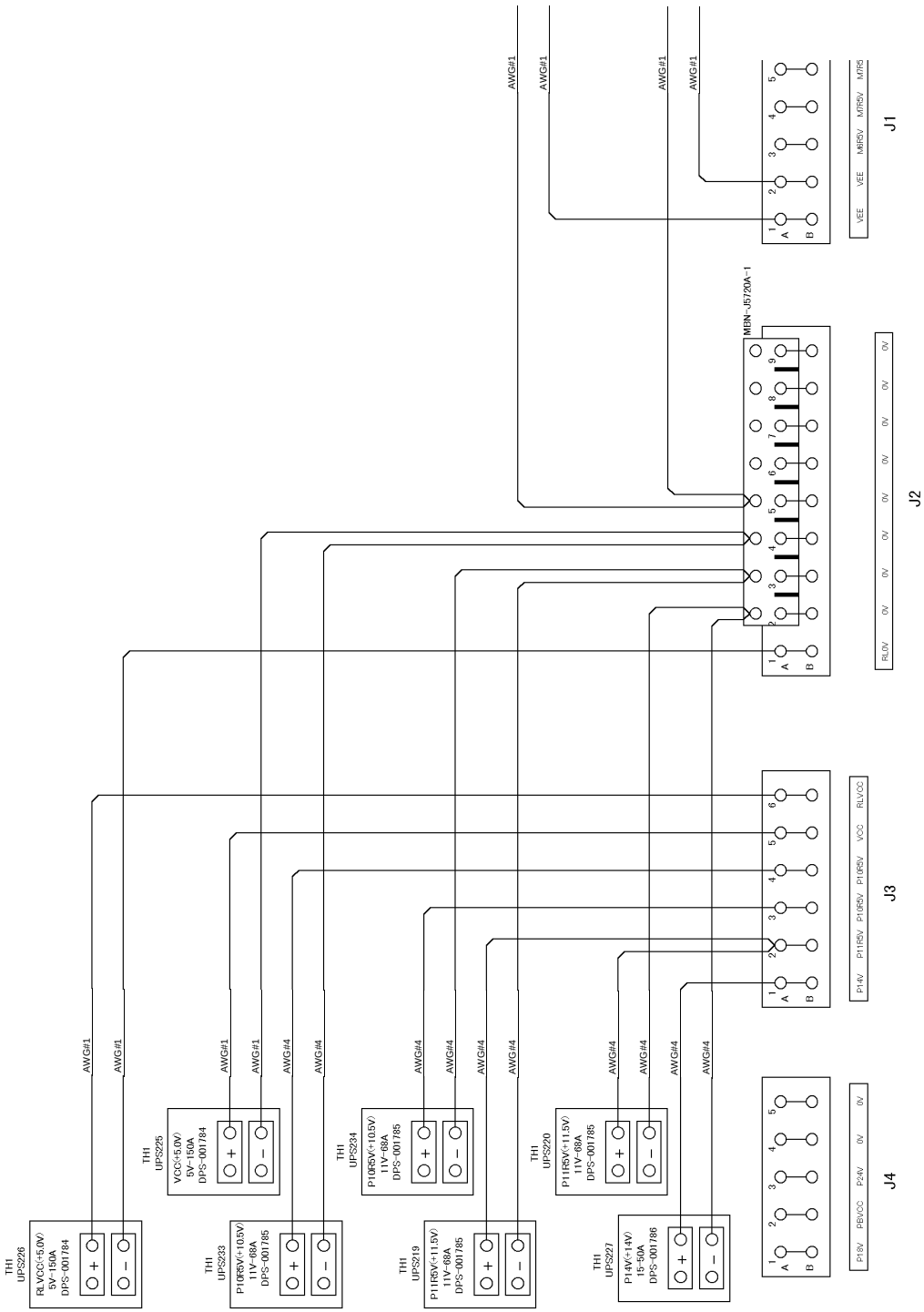

TH1 DC Connection (1/3)

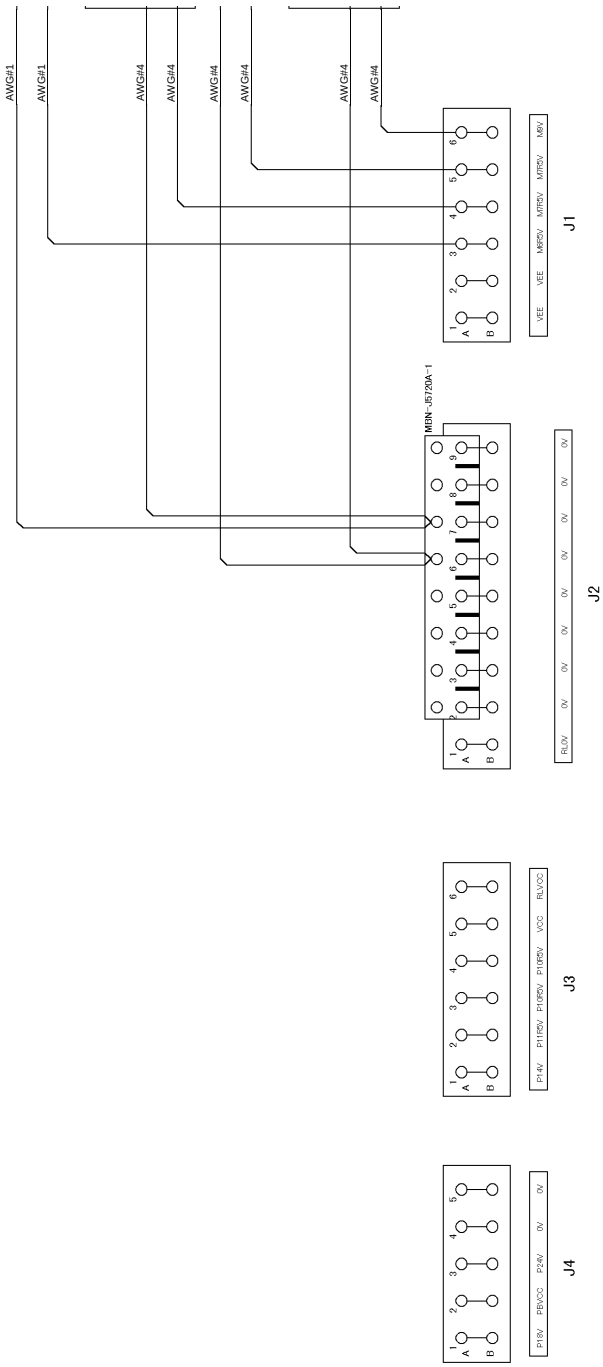

TH1 DC Connection (2/3)

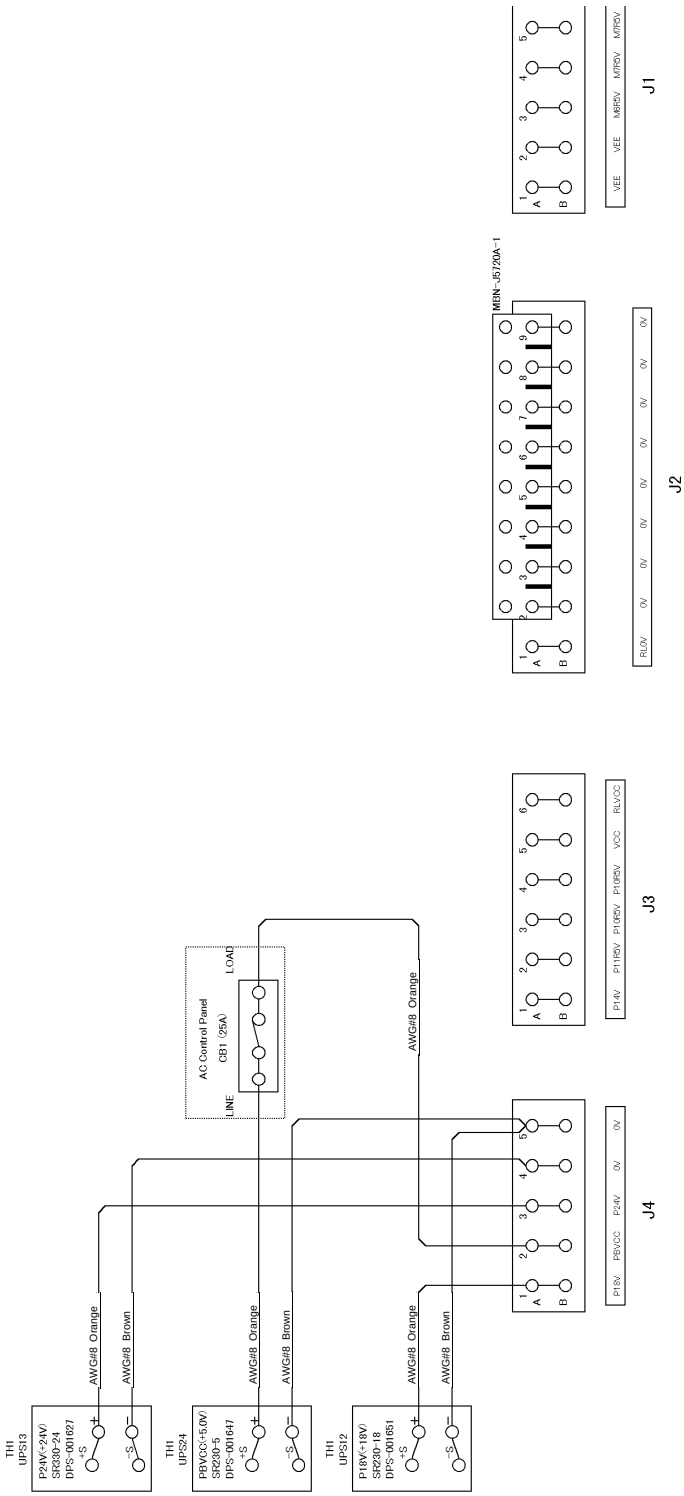

TH1 DC Connection (3/3)

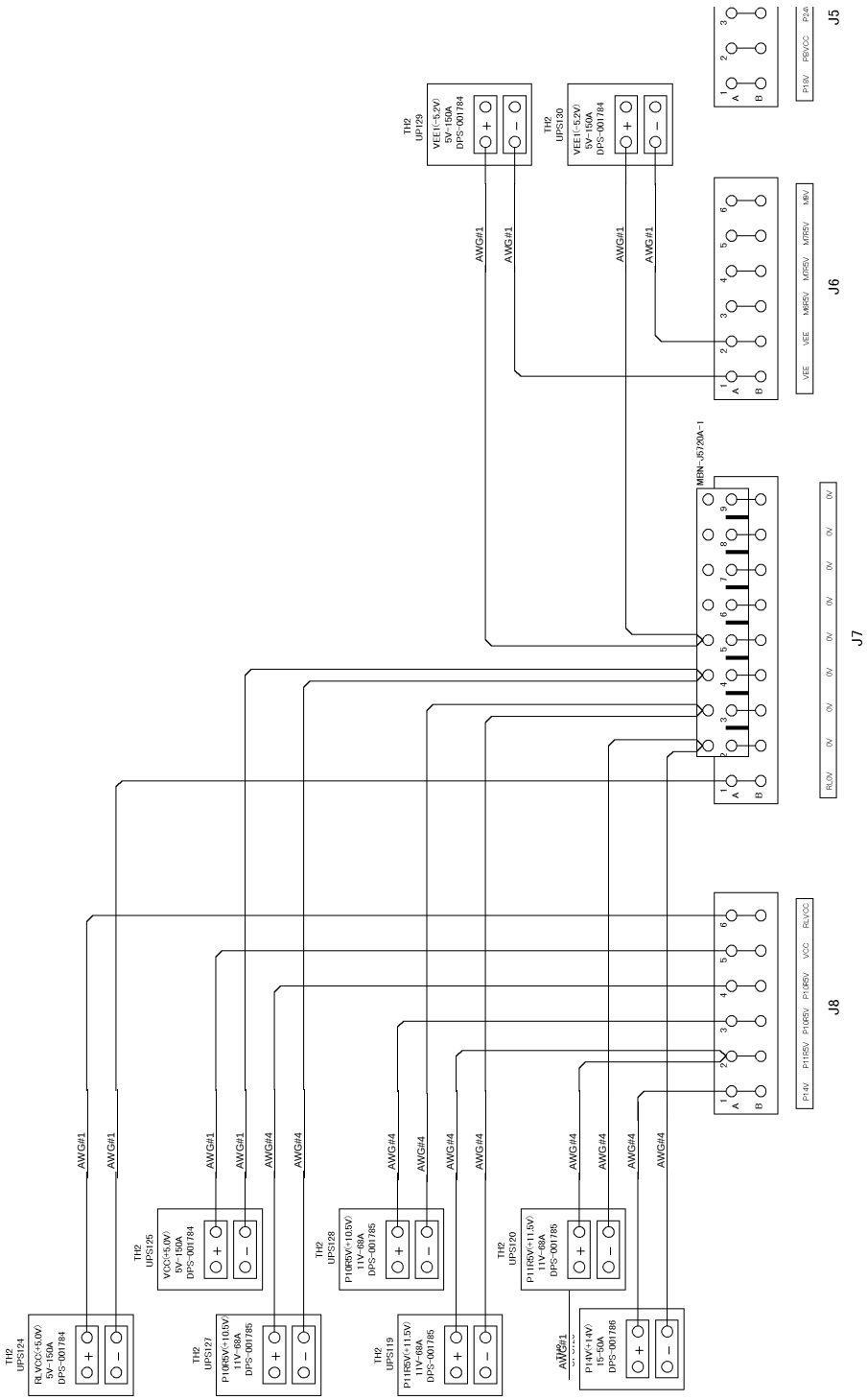

TH2 DC Connection (1/3)

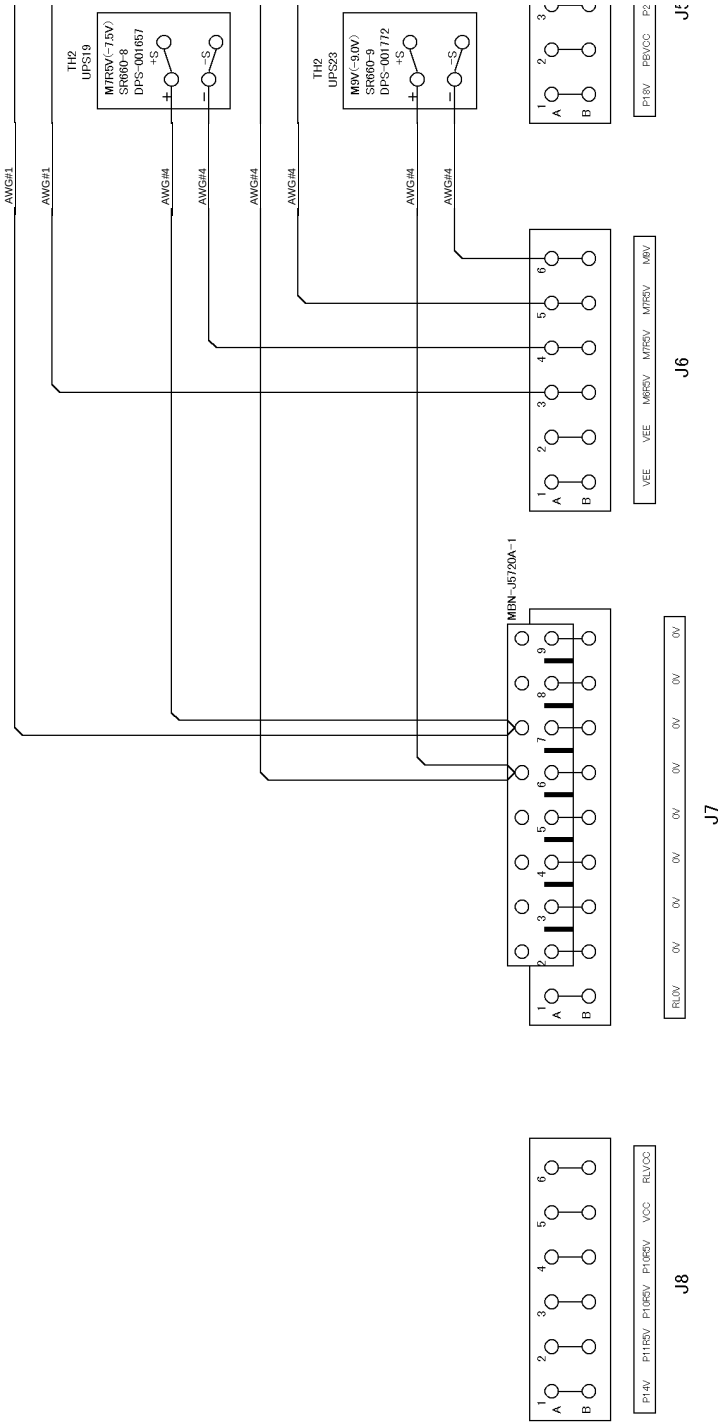

TH2 DC Connection (2/3)

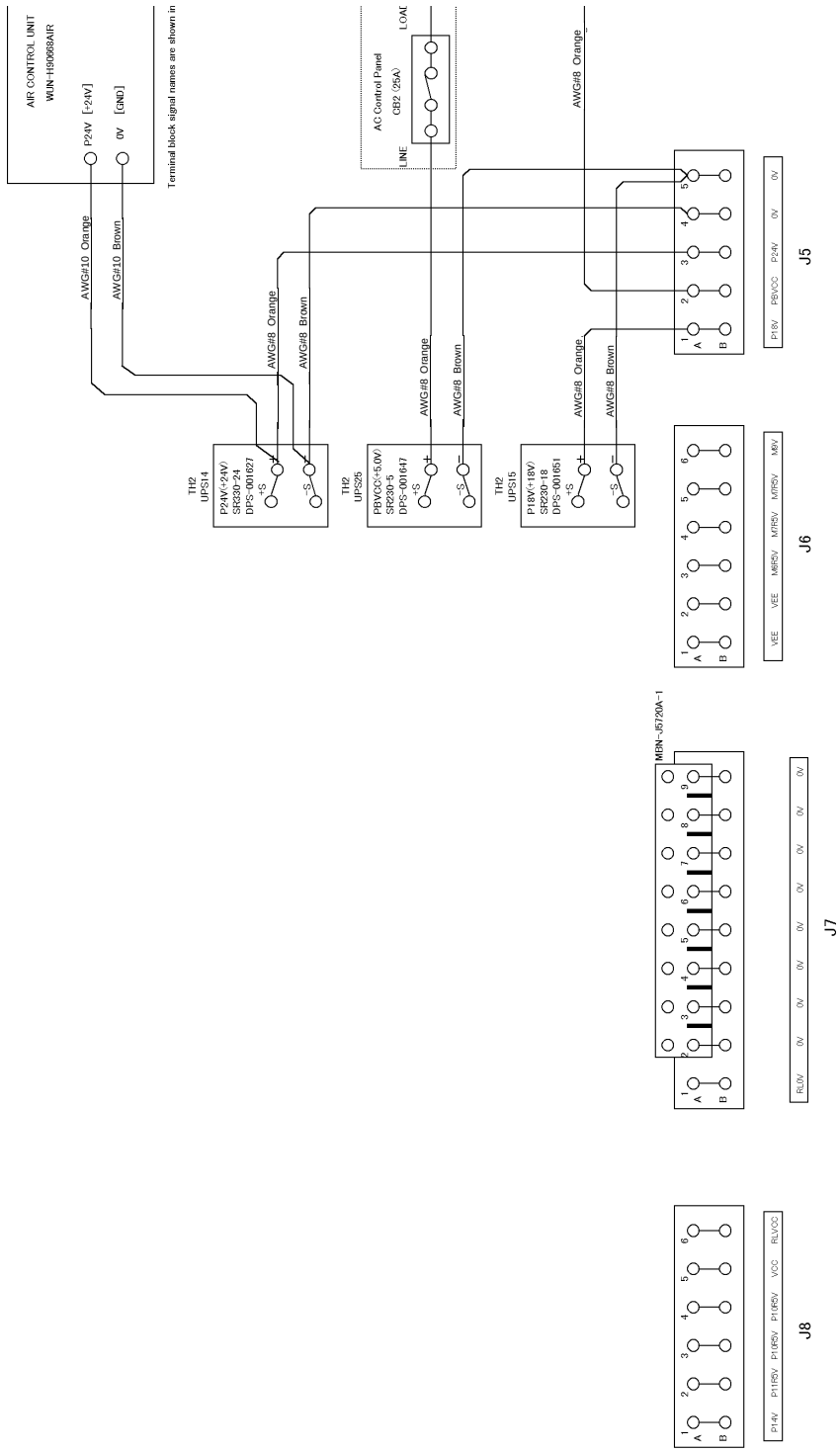

TH2 DC Connection (3/3)

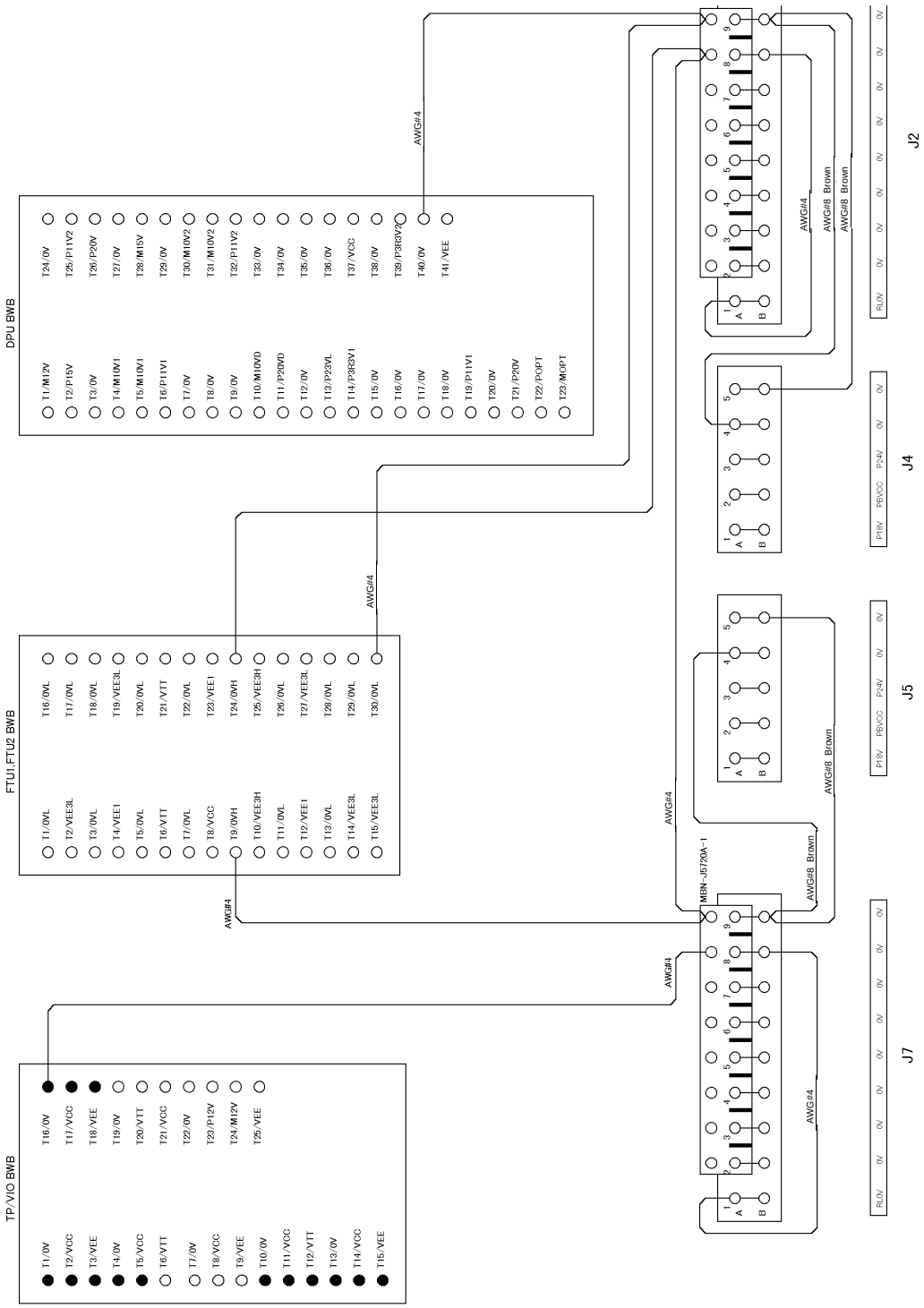

BWB 0V DC Connection (1/1)

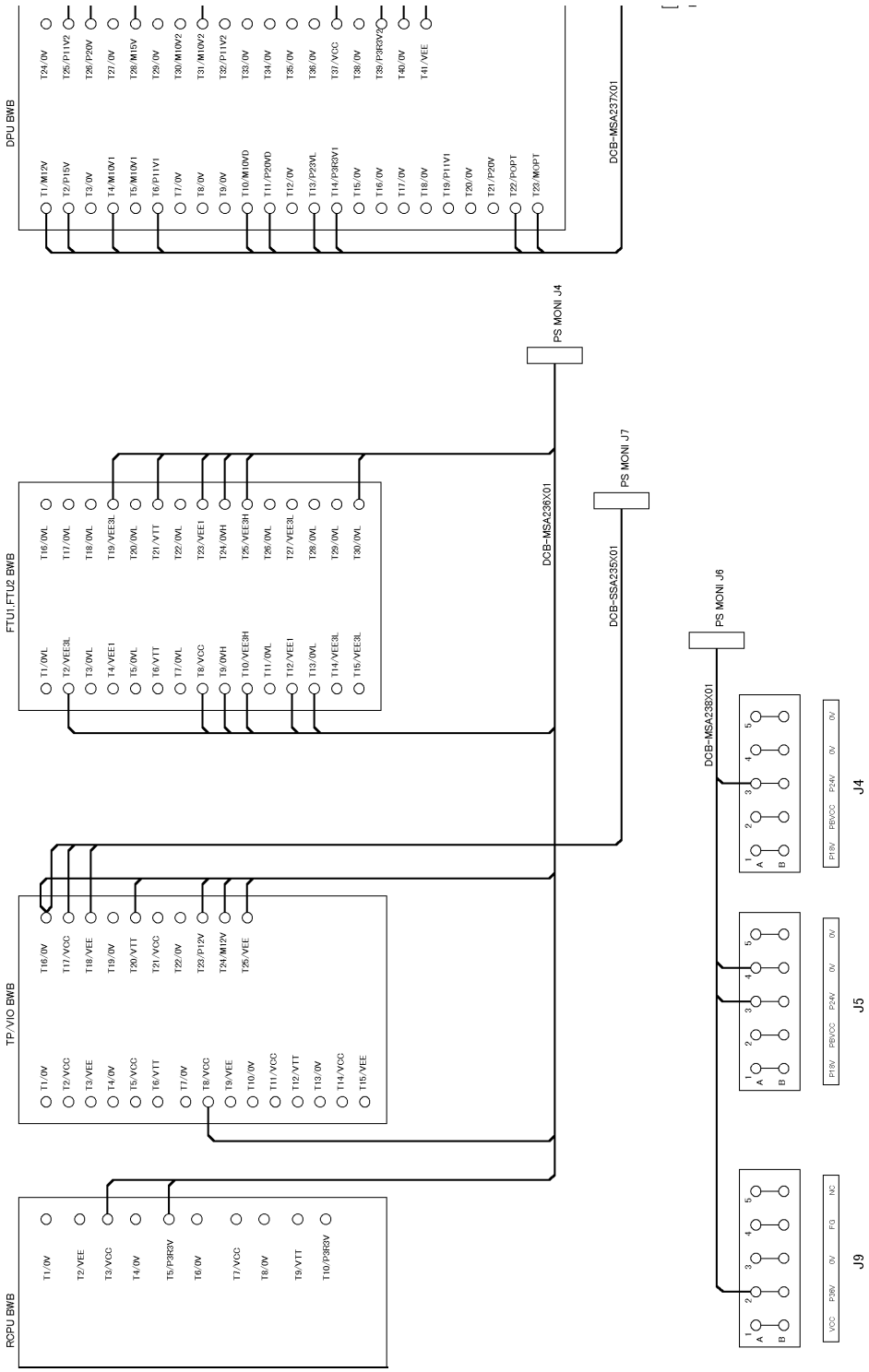

PS MONI CABLE Connection

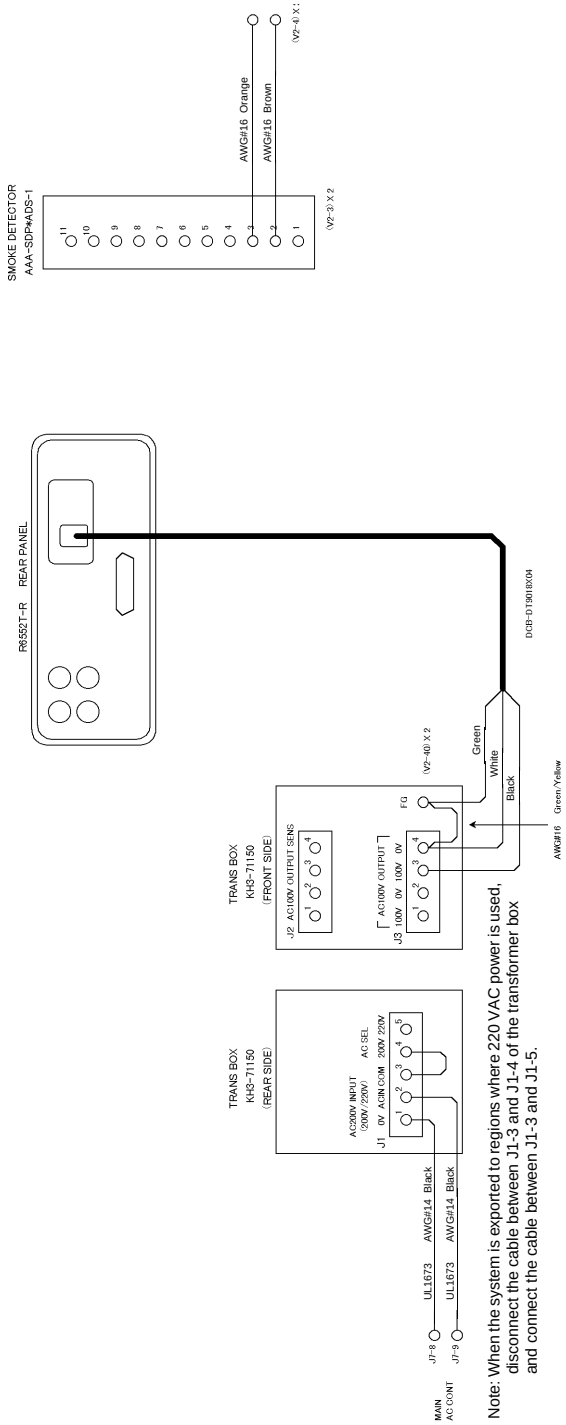

TRANS-BOX , SMOKE REC (1/2)
(When the transformer unit code is KH3-71150)

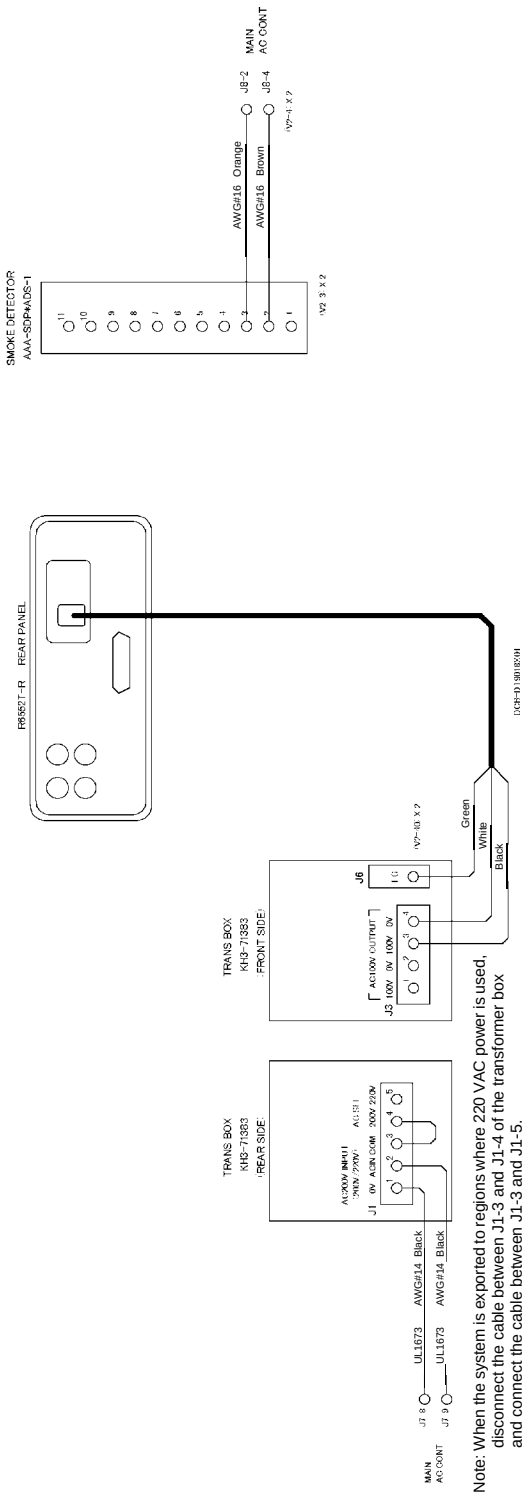

TRANS-BOX , SMOKE REC (2/2)
(When the transformer unit code is KH3-71383)

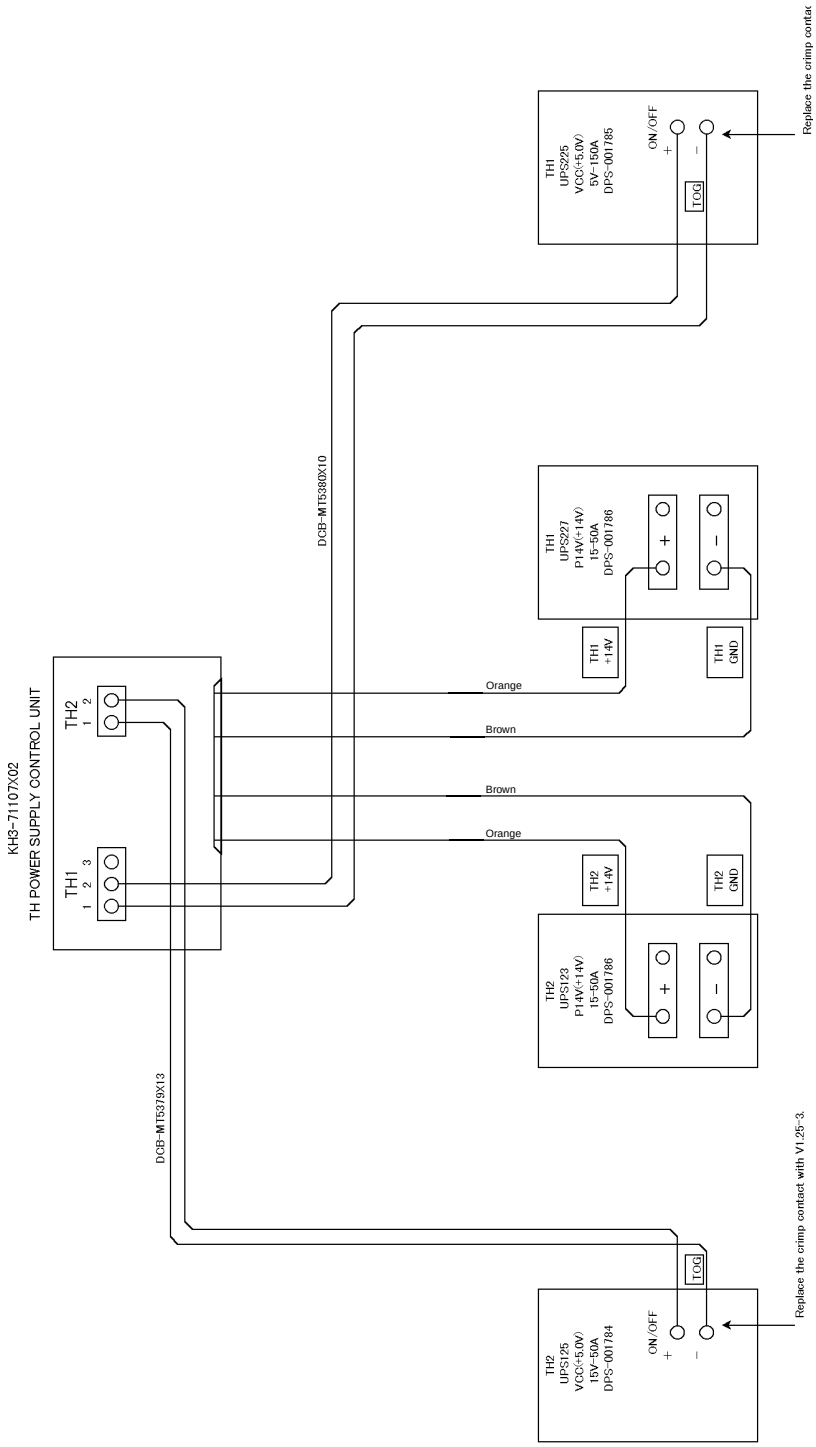

TH1/2 P5V ON/OFF CONTROL (1/1)

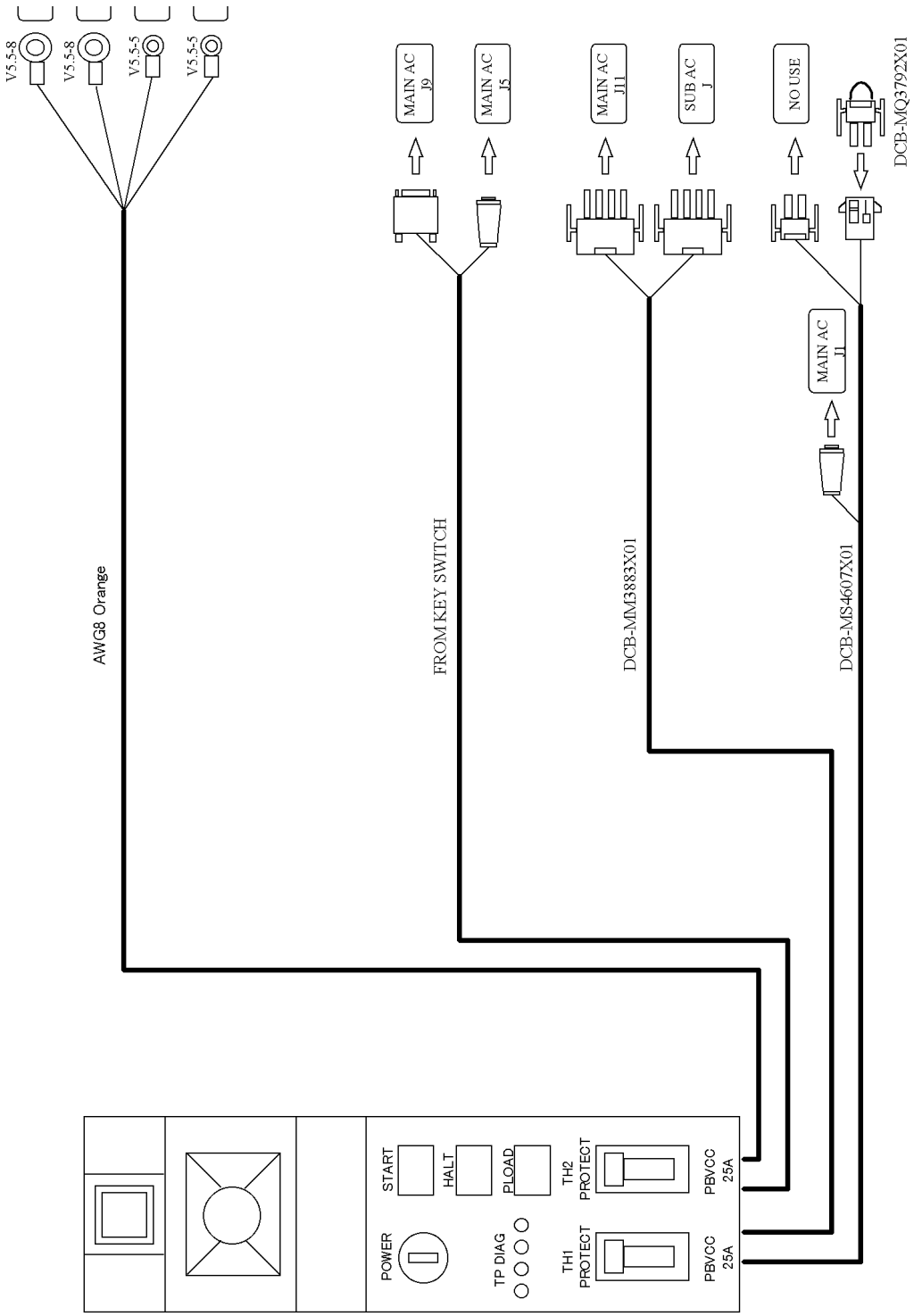

AC CONT PANEL Connection

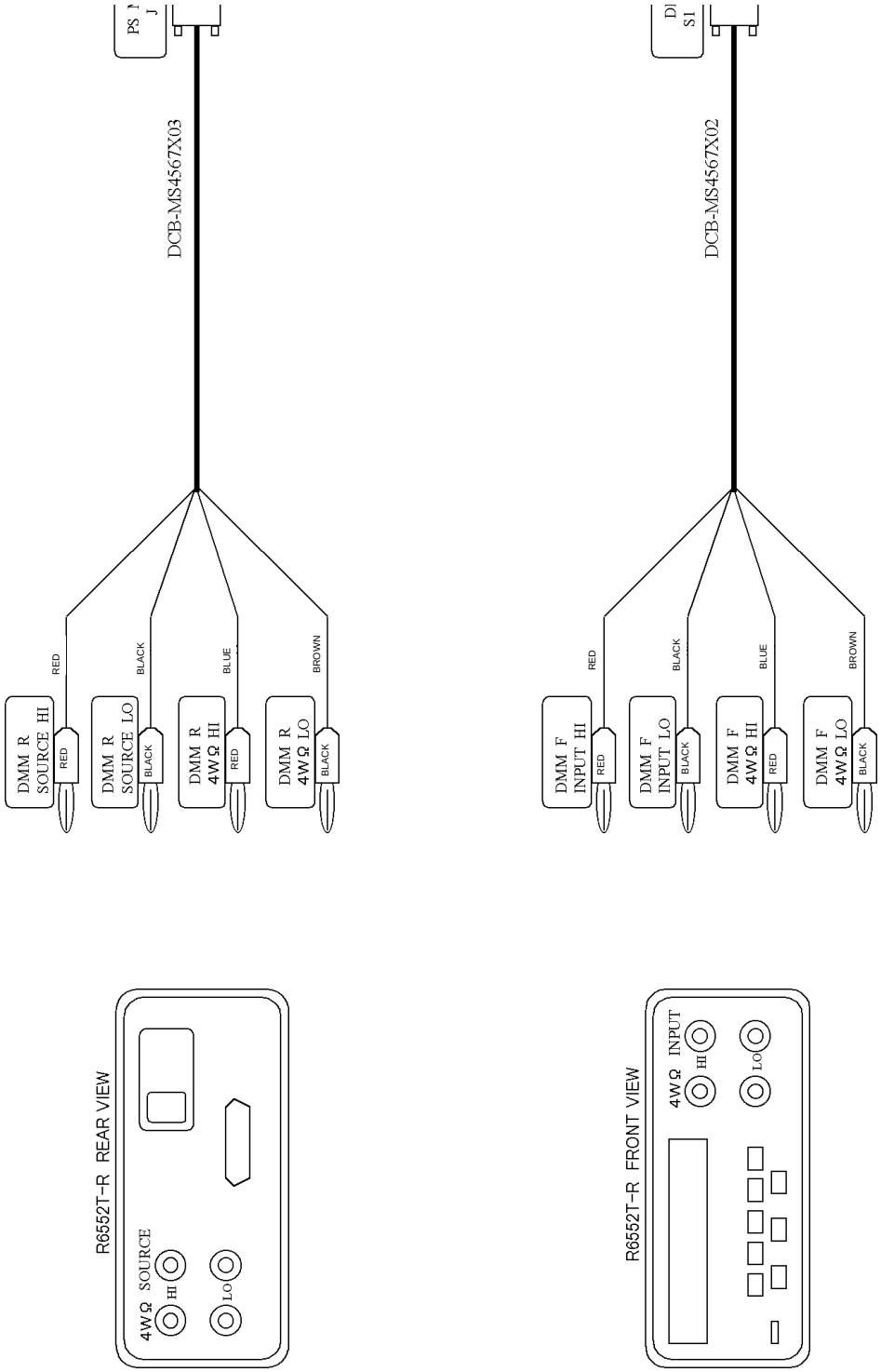
DCB-MS4567X03
DCB-MS4567X02
DMM R SOURCE HI
DMM R SOURCE LO
DMM R 4WΩ HI
DMM R 4WΩ LO
DMM F INPUT HI
DMM F INPUT LO
DMM F 4WΩ HI
DMM F 4WΩ LO
RED
BLACK
BLUE
BROWN
R6552T-R REAR VIEW
R6552T-R FRONT VIEW
4WΩ SOURCE
4WΩ INPUT
HI
LO

DMM INPUT

1. Mount the smoke sensors corresponding positions in the frame shown left.

2. Setting of Smoke Receiver

DETECTOR NUMBERS

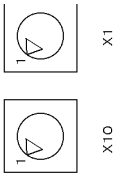

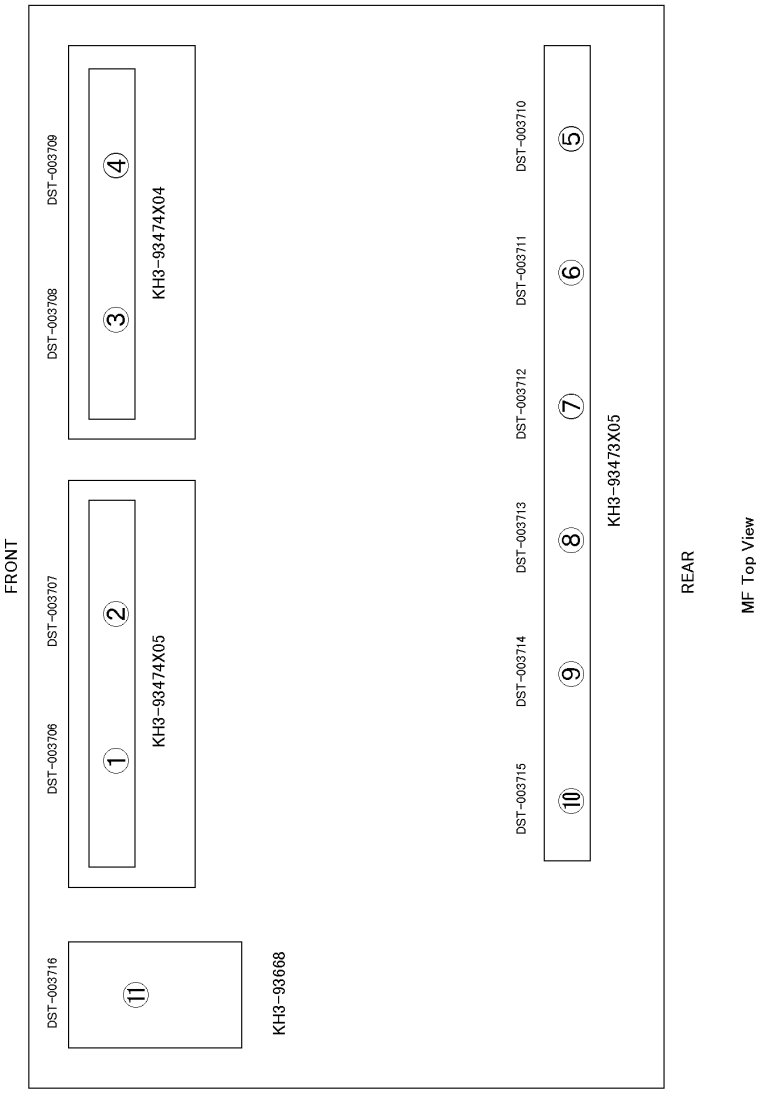

MF Top View

Smoke Sensor Layout

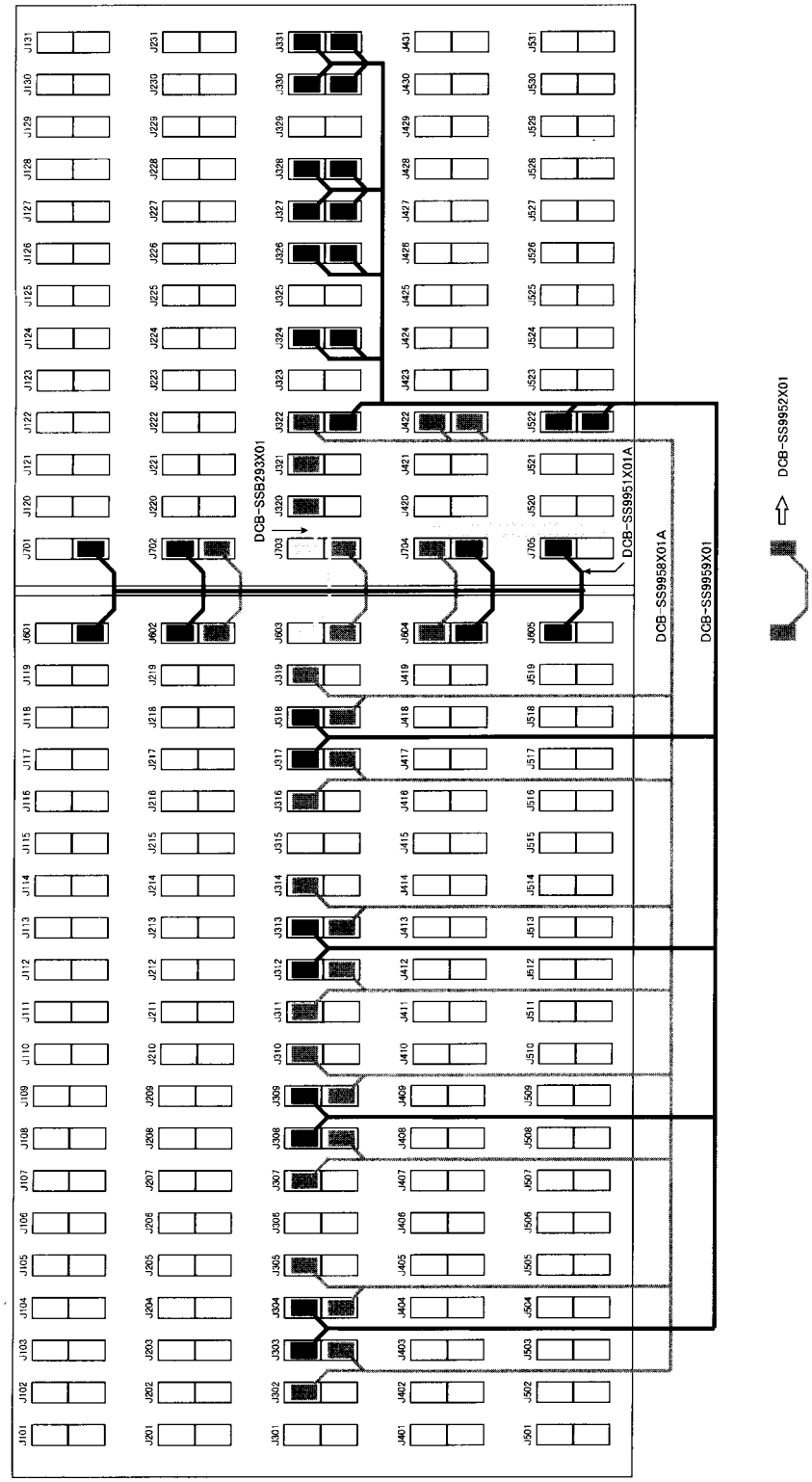

BWB CABLE Connection

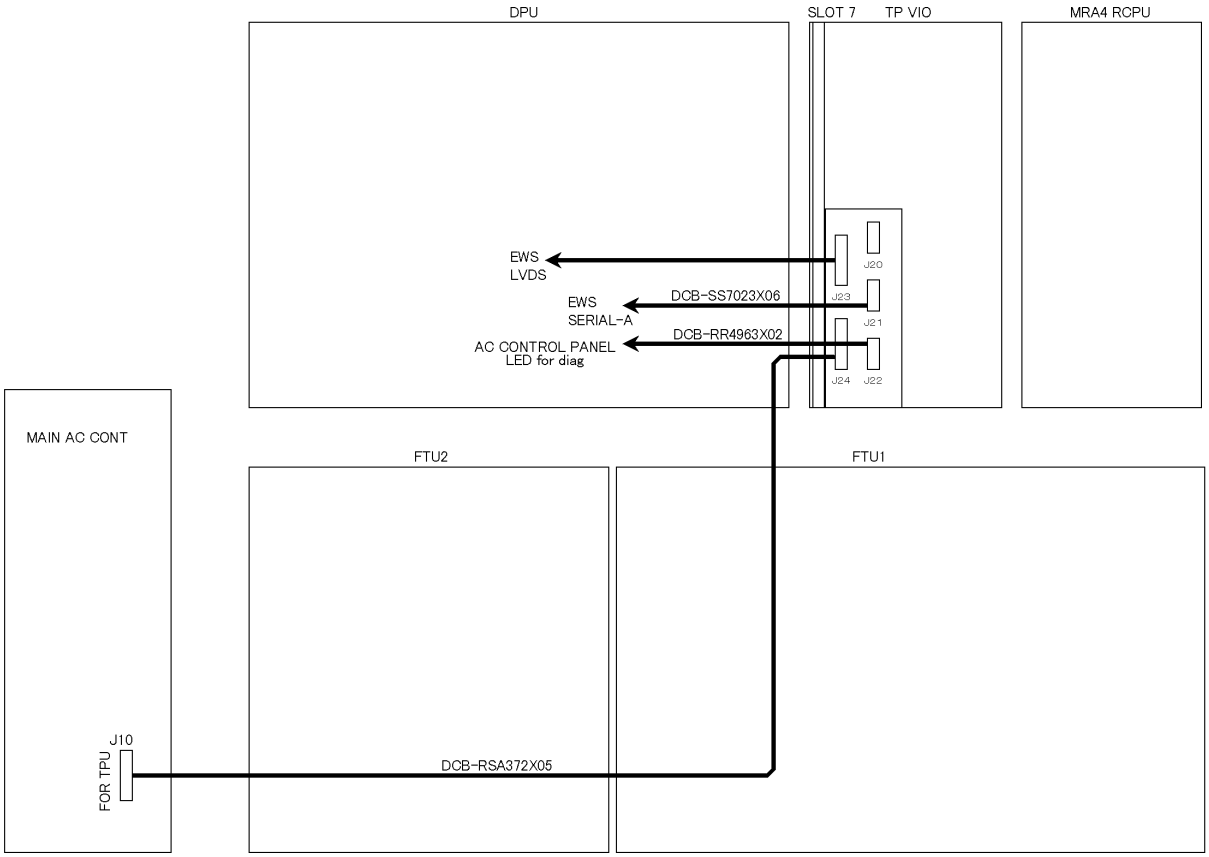

TP5 CABLE CONNECTION

For systems with MRA4 installed

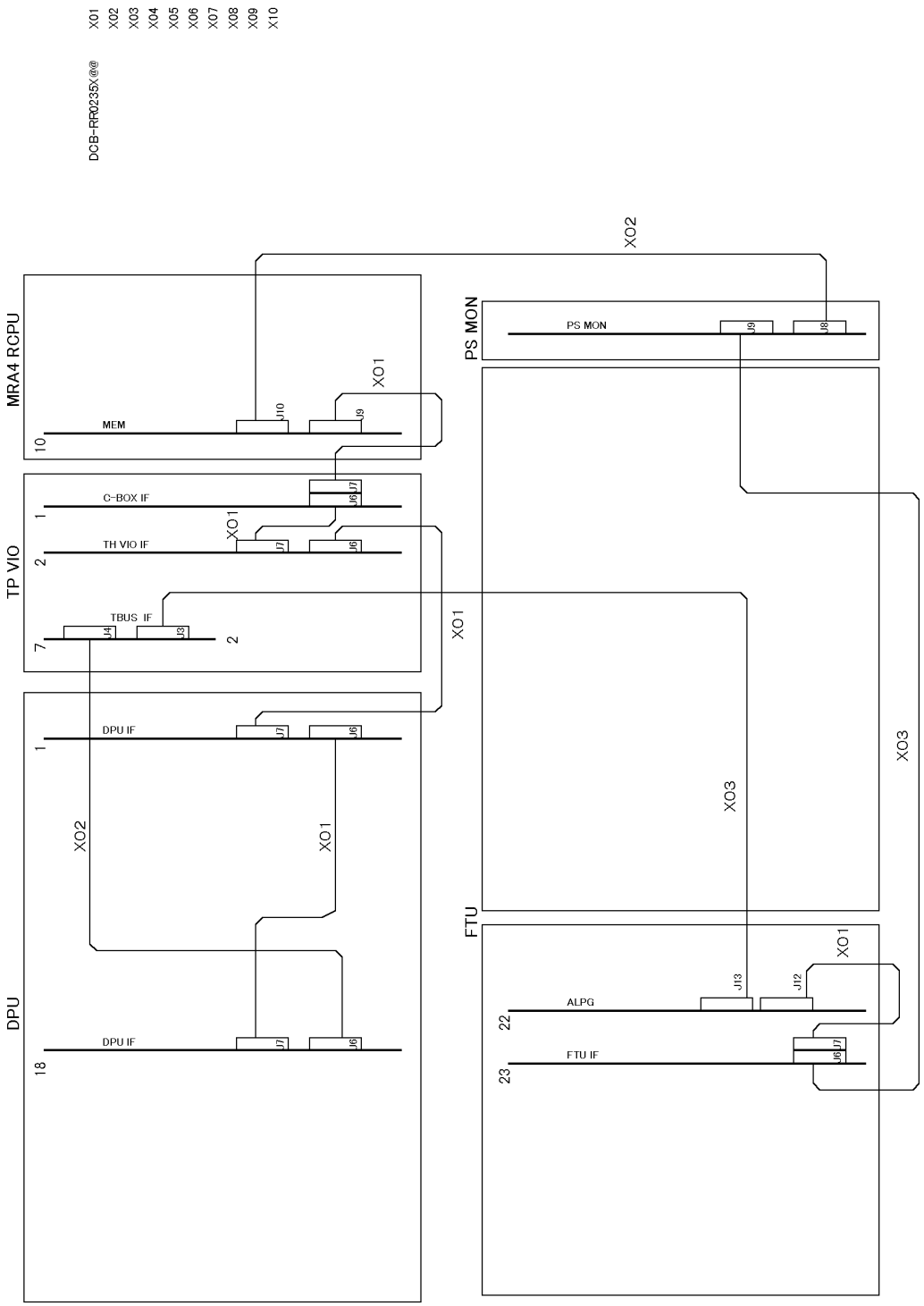

TESTER BUS CONNECTION (TP5) (1/2)

For systems without MRA4

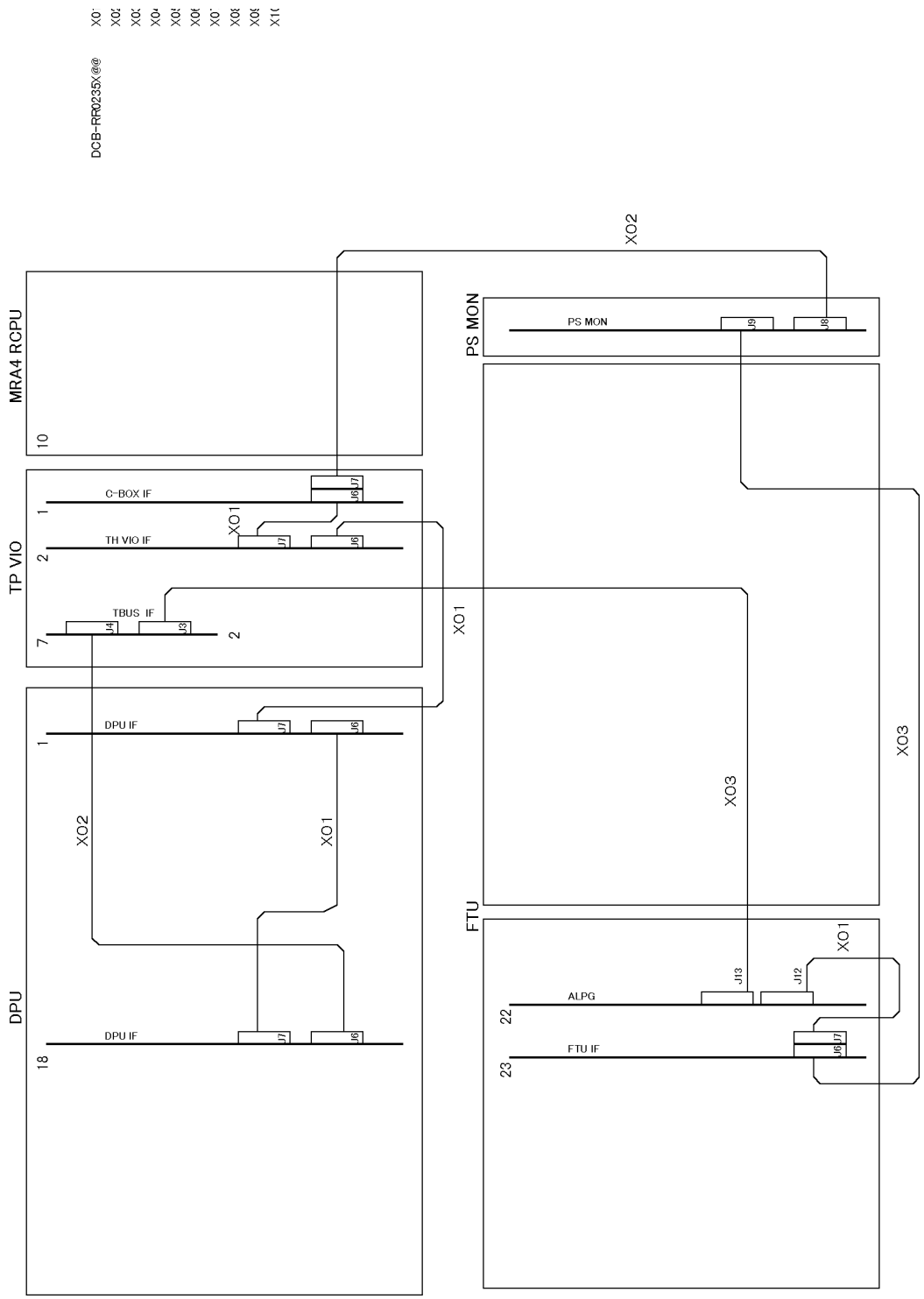

TESTER BUS CONNECTION (TP5) (2/2)

For systems with TP5 installed

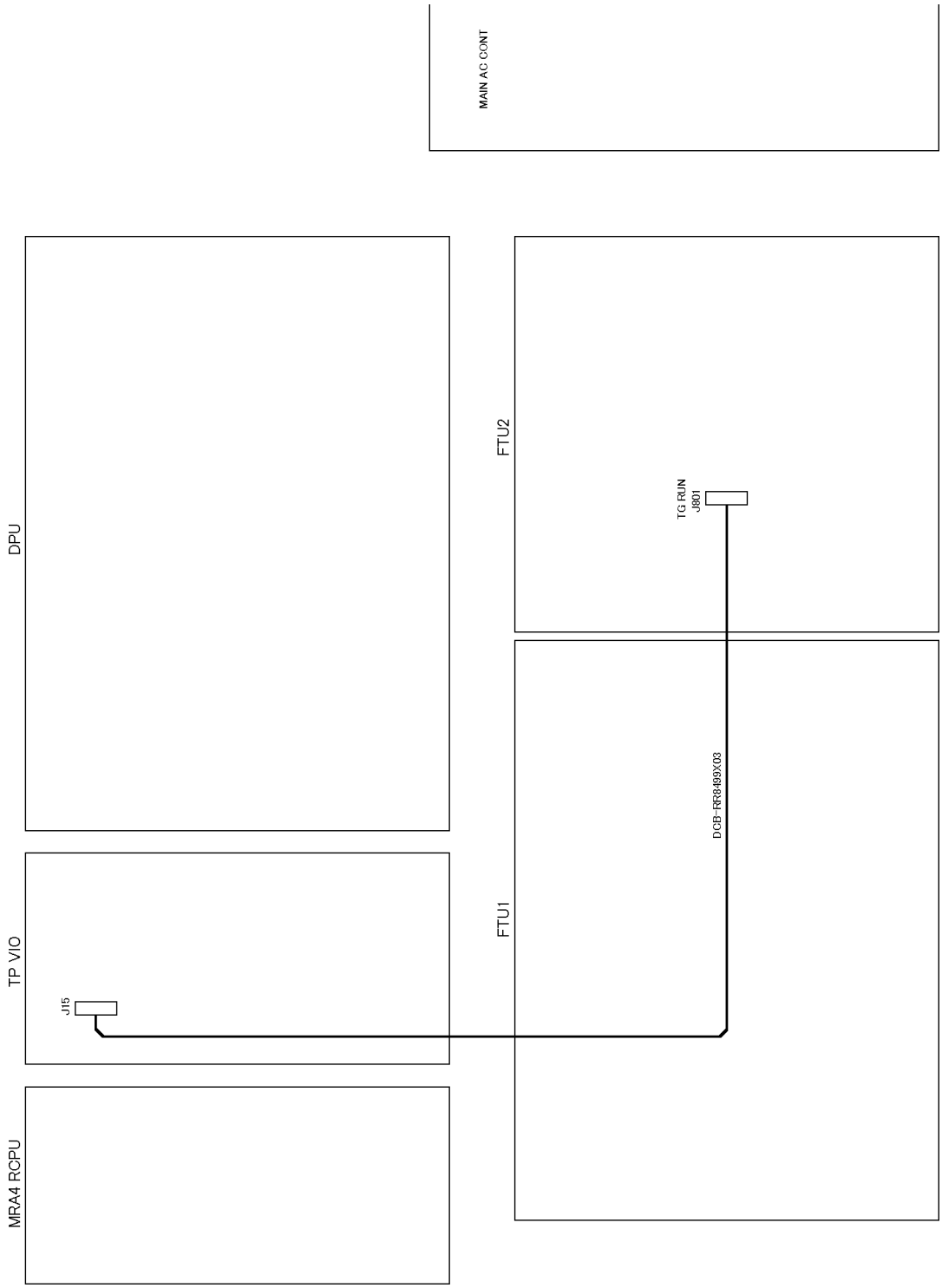

BWB CABLE CONNECTION (1/1)

APPENDIX 4 MAINTENANCE OF AIR CONTROL PANEL UNIT

A4.1 Setting Air Pressure

(1) Connect the air supply with the high coupler (YEE-001065) to provide the air pressure of approximately 0.49MPa.

(2) Adjust the meter of the first regulator to 0.49MPa with the valve.

(3) Adjust the meter of the secondary regulator to 0.69MPa with the valve.

Note: ***Not building up the pressure, the air pressure is set at 0.49MPa.***
In order to adjust the air pressure, one person must press and hold in the LOCK SWITCH so the other can change the settings.

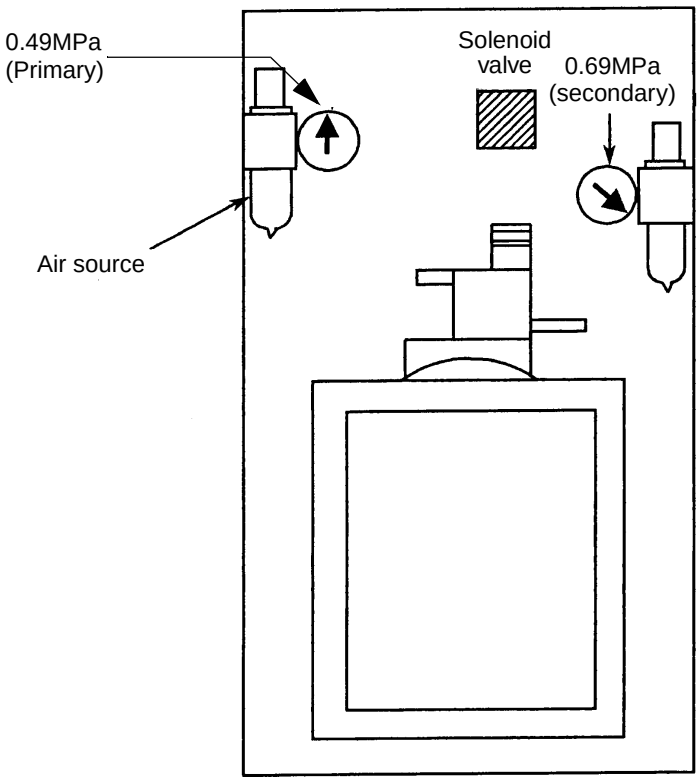

Figure A4-1 Air Control Panel Unit (Front View)

A4.2 Cable Connection of Air Control Panel

① At maintenance

(a) When the system configuration is 2 stations

Insert the short connectors (DCB-RR5236×01) into the J5(TH1), J6(TH1), J7(TH2) and J8(TH2) or turn the 1 and 2 of the maintenance switch (S1) ON.

(b) When the system configuration is 1 station

Insert the short connectors (DCB-RR5236×01) into the J5(TH1) and J6(TH1).
Do not insert the short connectors (DCB-RR5236×01) into the J7(TH2) and J8(TH2).
Or turn the 1 of the maintenance switch (S1) ON.

(Remarks)

If the short connectors have been attached to J7(TH2) and J8(TH2) without connecting the cable to connector J4(TH2 side), TH2 will continue to read the MB FREE signal.
To resolve this, disconnect the short connectors attached to J7(TH2) and J8(TH2).
And it have maintenance switches for each station.
The first switch is for TH1 and the second is for TH2.

CAUTION!
When the 1 or 2 of the maintenance switch(S1) turns ON, surely turns OFF after the maintenance is completed.
Turning on the maintenance switch disables the security circuit of the air control panel board.

② Connecting cables with surrounding units.

(a) When the system configuration is 2 stations.

	When peripheral units are not connected during maintenance	Connecting with TH-STAND	Connecting with Prober HIFIX (used for the PCZIF connector)	Connecting with Prober HIFIX (used for PC pogo contact pins)	Connecting with Others
J1 (TH1)	×	×	○ (DCB-SSC288X03)	×	×
J2 (TH1)	○ (DCB-RR4286X14B)	○ (DCB-RR4286X14B)	○ (DCB-RR4286X14B)	○ (DCB-RR4286X14B)	○ (DCB-RR4286X14B)
J3 (TH2)	×	×	○ (DCB-SSC288X03)	×	×
J4 (TH2)	○ (DCB-RR4286X14B)	○ (DCB-RR4286X14B)	○ (DCB-RR4286X14B)	○ (DCB-RR4286X14B)	○ (DCB-RR4286X14B)
J5 (TH1)	○ (DCB-RR5236X01)	○ (DCB-RR5235X01)	○ (DCB-RR5236X01)	○ (DCB-RR5236X01)	○ (DCB-RR5236X01)
J6 (TH1)	○ (DCB-RR5236X01)	○ (DCB-RR5236X01)	○ (DCB-SSC288X03)	○ (DCB-RR5580X01A)	○ (DCB-RR5235X01)
J7 (TH2)	○ (DCB-RR5236X01)	○ (DCB-RR5235X01)	○ (DCB-RR5236X01)	○ (DCB-RR5236X01)	○ (DCB-RR5236X01)
J8 (TH2)	○ (DCB-RR5236X01)	○ (DCB-RR5236X01)	○ (DCB-SSC288X03)	○ (DCB-RR5580X01A)	○ (DCB-RR5235X01)

(b) When the system configuration is 1 station.

	When peripheral units are not connected during maintenance	Connecting with TH-STAND	Connecting with Prober HIFIX (used for the PCZIF connector)	Connecting with Prober HIFIX (used for PC pogo contact pins)	Connecting with Others
J1 (TH1)	×	×	○ (DCB-SSC288X03)	×	×
J2 (TH1)	○ (DCB-RR4286X14B)	○ (DCB-RR4286X14B)	○ (DCB-RR4286X14B)	○ (DCB-RR4286X14B)	○ (DCB-RR4286X14B)
J3 (TH2)	×	×	×	×	×
J4 (TH2)	×	×	×	×	×
J5 (TH1)	○ (DCB-RR5236X01)	○ (DCB-RR5235X01)	○ (DCB-RR5236X01)	○ (DCB-RR5236X01)	○ (DCB-RR5236X01)
J6 (TH1)	○ (DCB-RR5236X01)	○ (DCB-RR5236X01)	○ (DCB-SSC288X03)	○ (DCB-RR5580X01A)	○ (DCB-RR5235X01)
J7 (TH2)	×	×	×	×	×

	When peripheral units are not connected during maintenance	Connecting with TH-STAND	Connecting with Prober HIFIX (used for the PCZIF connector)	Connecting with Prober HIFIX (used for PC pogo contact pins)	Connecting with Others
J8 (TH2)	×	×	×	×	×

○ : The cable in brackets is connected.
× : No cable is connected.

Note 1: Check to see if "DCB-RR5236x01" short cables are not connected to J6 and J8 when the "DCB-SS9793x03" is used with the PCZIF-type HIFIX prober.

Note 2: Check to see if no cables are connected to J1 and J3 when the PC pogo-type prober is used.

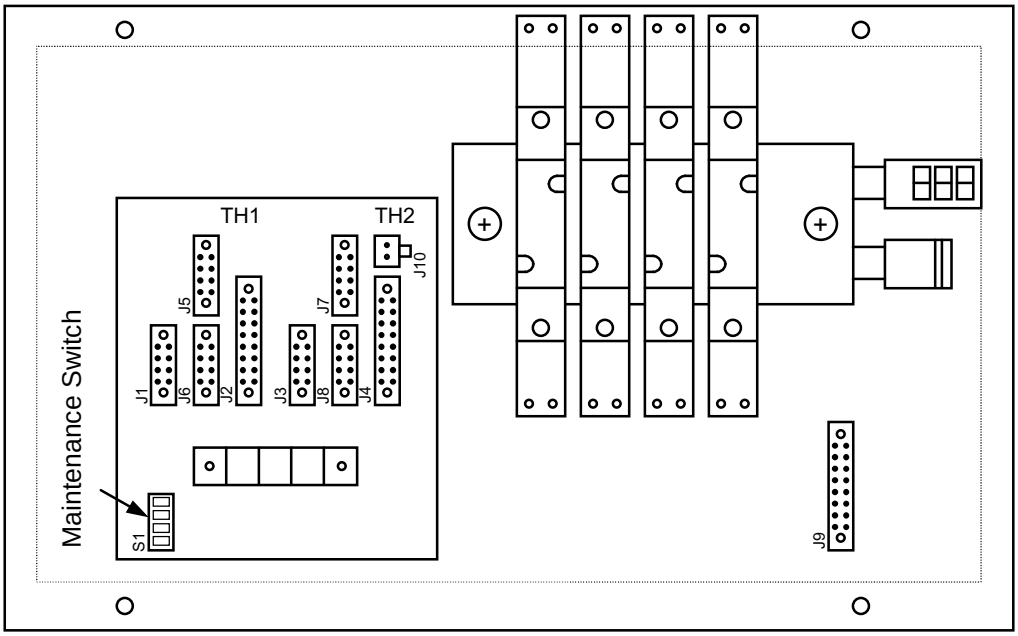

Figure A4-2 BLG-025612 Air Control Panel Assembling Figure (Front View)

A4.3 Booster Valve Check Procedure

Check the booster valve according to the following check list:

Table A4-1 Booster Valve Check List

Symptom	Cause	Corrective action
The air does not flow to the outlet (secondary side).	Inlet and outlet are connected reversely to each other.	Correct the connection.
The pressure does not rise.	The centrifugal spark advancer is not adjusted.	Correct the piston mounting position so that the piston is leveled. Because the piston cycle movement propagates to the mounting bolts, tighten them firmily. To prevent the vibration propagation, put a rubber cushion between the bolt and nut.
	The flow rate is too much.	Refer to the flow rate characteristics.
	The selector valve does not work normally due to a foreign matter.	Close the E port with your fingers to raise the exhause pressure, then release the E port. Discharge the air from the inlet and outlet, and feed the air again suddently.
Leakage from the centrifugal spark advancer is always seen.	Leakage from the centrifugal spark advancer fixing O ring.	Contact ADVANTEST.
	A foreign matter is caught by aaa washer.	
The specified characteristics cannot be obtained.	There is a problem in air exhaust method (clogging).	Replace the silencer exhaust cleaner.
	The inlet and outlet connection pipe diameter is small.	Connect wider pipes.

A4.4 Residual Air Pressure Treatment

(1) Close the front stage regulator unit valves as shown in Figure A4-1.

(2) Open the rear stage regulator unit drain valves as shown in Figure A4-1.

APPENDIX 5 PHOTOELECTRIC SMOKE DETECTION SYSTEM

A5.1 Maintenance for Environmental Processor

Turn the receiver off and set the number of smoke sensors connected to the receiver using the DETECTOR NUMBERS knobs.

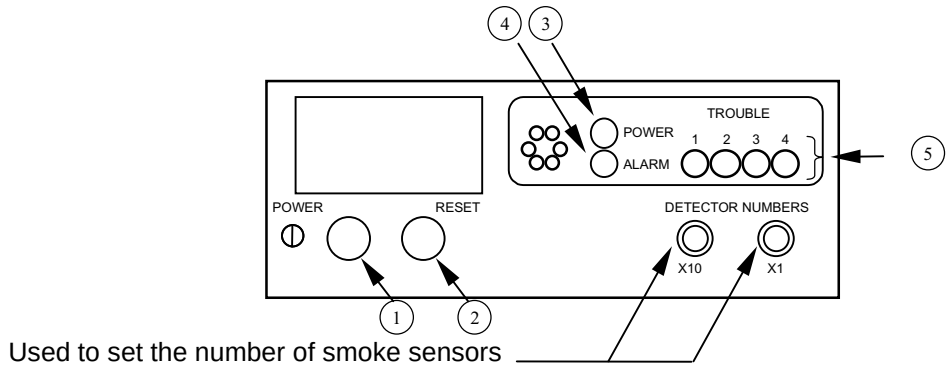

① POWER SW : Turns the detector system on or off.

② RESET SW : Resets smoke sensors which have caused alarms.

③ POWER Light : Turns on when the power is turned on.

④ ALARM Light : Turns on when smoke is detected.

⑤ TROUBLE Light : Turns on when a problem such as a wiring break occurs. (Refer to the Section A5.4, ”Workaround List.”)

- When the POWER switch is turned on, the ALARM and TROUBLE lights turn on in the order and the receiver is initialized for approximately one minute.
- After that, check that the ALARM and TROUBLE lights turn off.

- Be sure to turn the POWER switch off more than one minute after the switch was turned on. When the ALARM light turns on, an alarm sounds continuously. When TROUBLE lights are on, a beeping sound is activated.
- The sensor where the same address is assigned cannot be connected to the same receiver. (You can randomly assign the address number to sensors without duplicating an address.)
- Do not connect a terminator to the end of every smoke sensor.

A5.2 Smoke Sensor Specifications

Normal Operation:	The sensor LED turns on every ten seconds.
Alarm Condition:	The sensor LED turns on every two seconds.
Abnormal Condition:	The sensor LED does not turn on.

Note: Alarms occur when smoke is detected.

A5.3 Smoke Detection System Block Diagram

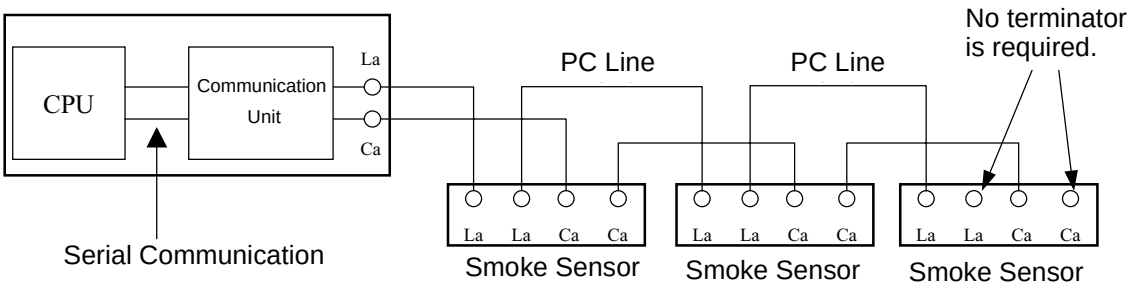

A5.4 Workaround List

5.4.1 When TROUBLE Light Turns On

TROUBLE Light No. in the Receive	Smoke Sensor LED	Possible Causes	Suggested Courses of Action
1	OFF	•PC lines may be broken. •Smoke sensor lines may be broken. • The power may be abnormal on a PC line. • The smoke sensor voltage may drop to less than 9 V. • RCU test failure • A problem may have occurred in the smoke sensor E2PROM. • A write error may have occurred in the smoke sensor E2PROM. • The smoke sensor sensitivity may be inferior to its specification.	• Make sure that the PC lines are connected to the terminals of the receiver correctly. • Make sure that the PC lines are connected to the terminal of each smoke sensor correctly. • Check to see if any PC lines are broken. • Make sure that the smoke sensors are properly attached to each base correctly. • If any smoke sensors are not functioning, they must be replaced. (Contact ADVANTEST for more information.)
2	ON	The number of smoke sensors the receiver identifies is larger than the DETECTOR NUMBERS setting.	Change the setting to the current number of smoke sensors.
3		The number of smoke sensors the receiver identifies is smaller than the setting in DETECTOR NUMBERS.	
2,3	OFF	PC lines short-circuited.	Wire PC lines correctly.

TROUBLE Light No. in the Receive	Smoke Sensor LED	Possible Causes	Suggested Courses of Action
4	ON	• DETECTOR NUMBERS is set at zero in the receiver. • DETECTOR NUMBERS is set at 22 or more in the receiver. • A communication unit error occurred.	• Check the DETECTOR NUMBERS setting in the receiver. • If there is something wrong with the communication unit, the receiver must be replaced. (Contact ADVANTEST for more information.)
		The receiver accepted alarm signal from more than four sensors. However, the amount of smoke detected was not high enough to activate an alarm. If this occurred, TROUBLE lights 1, 2 and 3 blink.	If this occurs, please contact ADVANTEST.

5.4.2 When TROUBLE Lights are Flashing

TROUBLE Light No. in the Receive	Smoke Sensor LED	Possible Causes	Suggested Courses of Action
1,2,3,4	OFF	Though the receiver accepted an alarm signal from a sensor, the beeper did not sound and the internal TROUBLE relay does not open because the amount of smoke detected was not high enough to activate an alarm.	If this occurs, please contact ADVANTEST .