ADVANTEST®

ADVANTEST CORPORATION

T6575/T6565/T6535
VLSI TEST SYSTEM
TESTER SECTION
MAINTENANCE MANUAL

MANUAL NUMBER 8431578-10

Applicable Systems

T6575
T6565
T6535

NOTE: *Prior to performing any maintenance tasks described in this manual, thoroughly read the information related to the safety of the system provided in the "IC Test System Safe Handling Guide".*

© 2002 ADVANTEST CORPORATION
All rights reserved.

First printing September 17, 2002
Printed in Japan

PREFACE

Fluorinert ™ is a registered trademark of 3M.

FC-3283 is one of 3M Fluorinert ™ model names.

For details on signal names and signal allocations on the performance board, refer to "VLSI TEST SYSTEM PERFORMANCE BOARD ASSEMBLY PROCEDURE" for each HI-FIX.

RECORD OF REVISIONS

Manual Rev	Date	Remarks	Manual Rev	Date	Remarks
01	Sep 17/02				
02	Oct 31/02				
03	Mar 20/03				
04	Apr 18/03				
05	Jun 16/03				
06	Oct 30/03				
07	Mar 15/04				
08	Feb 1/06				
09	Mar 20/06				
10	May 10/06				

LIST OF EFFECTIVE PAGES

	Preface	Jun 16/03	3-20	Feb 1/06	6-13	Oct 30/03
#	R-1	May 10/06	3-21	Feb 1/06	6-14	Oct 30/03
#	P-1	May 10/06	3-22	Feb 1/06	6-15	Oct 30/03
#	P-2	May 10/06	3-23	Feb 1/06	7-1	Oct 30/03
	C-1	Feb 1/06	3-24	Feb 1/06	7-2	Feb 1/06
	C-2	Feb 1/06	3-25	Feb 1/06	7-3	Feb 1/06
	C-3	Feb 1/06	3-26	Feb 1/06	8-1	Oct 31/02
##	C-4	May 10/06	3-27	Feb 1/06	8-2	Oct 31/02
	F-1	Mar 20/06	3-28	Feb 1/06	8-3	Oct 30/03
#	F-2	May 10/06	3-29	Feb 1/06	8-4	Feb 1/06
	T-1	Feb 1/06	3-30	Feb 1/06	8-5	Oct 30/03
	1-1	Sep 17/02	4-1	Oct 30/03	8-6	Oct 30/03
	1-2	Oct 30/03	4-2	Oct 30/03	8-7	Oct 30/03
	1-3	Sep 17/02	4-3	Oct 30/03	8-8	Oct 30/03
#	2-1	May 10/06	4-4	Oct 30/03	8-9	Oct 30/03
	2-2	Sep 17/02	5-1	Sep 17/02	8-10	Oct 30/03
	2-3	Sep 17/02	5-2	Sep 17/02	8-11	Oct 30/03
	2-4	Sep 17/02	5-3	Sep 17/02	8-12	Oct 30/03
	2-5	Sep 17/02	5-4	Sep 17/02	8-13	Oct 30/03
	2-6	Jun 16/03	5-5	Sep 17/02	8-14	Oct 30/03
	2-7	Oct 31/02	5-6	Sep 17/02	8-15	Oct 30/03
	2-8	Oct 31/02	5-7	Sep 17/02	8-16	Oct 30/03
	2-9	Sep 17/02	5-8	Sep 17/02	8-17	Oct 30/03
	2-10	Apr 18/03	5-9	Sep 17/02	8-18	Oct 30/03
	2-11	Sep 17/02	5-10	Sep 17/02	8-19	Oct 30/03
	3-1	Sep 17/02	5-11	Oct 30/03	8-20	Oct 30/03
	3-2	Sep 17/02	5-12	Oct 30/03	8-21	Oct 30/03
	3-3	Feb 1/06	5-13	Oct 30/03	9-1	Sep 17/02
	3-4	Feb 1/06	5-14	Oct 30/03	9-2	Sep 17/02
	3-5	Feb 1/06	5-15	Oct 30/03	9-3	Sep 17/02
	3-6	Feb 1/06	5-16	Oct 30/03	10-1	Feb 1/06
	3-7	Feb 1/06	5-17	Oct 30/03	10-2	Mar 15/04
	3-8	Feb 1/06	6-1	Sep 17/02	10-3	Jun 16/03
	3-9	Feb 1/06	6-2	Oct 30/03	10-4	Jun 16/03
	3-10	Feb 1/06	6-3	Oct 30/03	11-1	Oct 30/03
	3-11	Feb 1/06	6-4	Oct 30/03	12-1	Sep 17/02
	3-12	Feb 1/06	6-5	Oct 30/03	12-2	Sep 17/02
	3-13	Feb 1/06	6-6	Oct 30/03	12-3	Sep 17/02
	3-14	Feb 1/06	6-7	Oct 30/03	13-1	Feb 1/06
	3-15	Feb 1/06	6-8	Oct 30/03	13-2	Feb 1/06
	3-16	Feb 1/06	6-9	Oct 30/03	13-3	Feb 1/06
	3-17	Feb 1/06	6-10	Oct 30/03	13-4	Feb 1/06
	3-18	Feb 1/06	6-11	Mar 20/06	13-5	Feb 1/06
	3-19	Feb 1/06	6-12	Oct 30/03	13-6	Feb 1/06

Note: Pages with # are revised.
Pages with ## are added.
Pages with ( ) are deleted.

List of Effective Pages

	A1-1	Sep 17/02
	A1-2	Sep 17/02
	A1-3	Sep 17/02
	A2-1	Jun 16/03
	A3-1	Jun 16/03
	A3-2	Jun 16/03
	A3-3	Jun 16/03
	A3-4	Jun 16/03
	A4-1	Feb 1/06
	A4-2	Feb 1/06
	A4-3	Feb 1/06
	A4-4	Feb 1/06
	A4-5	Feb 1/06
	A5-1	Oct 30/03
	A5-2	Oct 30/03
	A5-3	Oct 30/03
	A5-4	Feb 1/06
	A5-5	Feb 1/06
	A6-1	Mar 15/04
	A6-2	Feb 1/06
	A7-1	Feb 1/06
	A7-2	Feb 1/06
	A7-3	Feb 1/06
	A7-4	Feb 1/06
##	A8-1	May 10/06
##	A8-2	May 10/06

Note: Pages with # are revised.
Pages with ## are added.
Pages with ( ) are deleted.

TABLE OF CONTENTS

1. OVERVIEW 1-1

1.1 General Precautions 1-1
1.1.1 Environmental Conditions 1-1
1.1.2 Handling Precautions 1-2
1.1.3 Test Precautions 1-3
1.1.4 Board Replacement Precautions 1-3
1.1.5 Precautions for Abnormal Test System Shut Down 1-3
1.1.6 Initial Settings of DMM (R6581T) 1-3

2. SYSTEM OPERATION 2-1

2.1 Operation on Performance Board (PB) Switch Panel 2-1
2.2 Starting the Test System (Normal Mode) 2-2
2.3 Resetting the EMO Switch 2-5
2.4 System Maintenance 2-6
2.4.1 Diagnosis 2-6
2.4.2 Initialization 2-6
2.4.3 Calibration 2-6
2.5 Using the Tester after Installation, Inspection, and Board Replacements 2-7
2.5.1 After Installation/System Calibrations 2-7
2.5.2 After Periodic Inspections 2-7
2.5.3 After Board Replacements 2-8
2.5.4 After Board Installation or Removal 2-11

3. MAINTENANCE OPERATION 3-1

3.1 Hot Work 3-2
3.2 Periodic Inspection Items 3-3
3.3 Replacing the Fan Block (Hot Work Type 1) 3-5
3.3.1 Replacing the Fan Block for the Unit Power Supply 3-5
3.3.2 Replacing the Fan Block for the Unit 3-6
3.4 Replacing the Unit Power Supply 3-7
3.4.1 Procedure for Removing the Unit Power Supply (Hot Work Type 1) 3-7
3.4.2 Precautions to Be Taken when Installing the Unit Power Supply 3-8
3.5 Precautions to Be Taken when Replacing AC Power Supply (AC CONT) 3-10
3.6 Opening/Closing the Frame Panel 3-10
3.7 When System Does Not Start Properly 3-14
3.7.1 When the System Monitor Does Not Start 3-15
3.7.2 Checking FATAL ERROR 3-15
3.7.3 Recovering the System after Being Shut down by the init5 Command 3-16
3.8 Starting the System Monitor DIAG 3-17
3.9 System Monitor Error Codes 3-20
3.10 Monitor Interface Error Codes 3-23

3.11 Replacing IO IF 3-25
3.11.1 Using ROM Monitor Board 3-26
3.11.2 Setting the Monitor I/F ID 3-27
3.11.3 Setting Date and Time 3-29
3.11.4 Setting the System Type 3-30

4. LED SPECIFICATIONS 4-1

4.1 Specifications of the TC6/TC7 Unit LEDs 4-1
4.2 Specifications of the DP Unit LEDs 4-3
4.3 Specifications of the Monitor I/F LEDs 4-4

5. BOARD REPLACEMENT 5-1

5.1 How to Read the Cable Marker 5-1
5.2 Detaching/Attaching Boards Mounted Inside the Frame 5-2
5.3 Detaching/Attaching the Boards Mounted in the Test Head 5-3
5.3.1 Detaching/Attaching the Mounted Board 5-3
5.4 Procedure for Replacing the Pin Electronics Card (PE) 5-4
5.5 Procedure for Replacing the Test Head Board Power Supply 5-6
5.6 Precautions to Be Taken when Carrying Boards 5-8
5.7 Operation when Replacing Boards 5-9
5.8 Removing the TC6 CPU UNIT 5-14
5.9 Removing the TC7 CPU UNIT 5-16

6. UNIT, POWER SUPPLY LAYOUT, AND VOLTAGE SPECIFICATION 6-1

6.1 System Layout 6-1
6.2 Main Frame Inside Layout 6-2
6.3 Safety Device Mounting Position 6-6
6.4 Center of Gravity, Frame Structure 6-13
6.5 Unit Power Supply Specification List 6-15

7. BOARD LOCATION 7-1

8. WIRING DIAGRAM 8-1

8.1 Signal Wiring 8-1
8.2 Power Supply Wiring 8-7

9. HANDLING OF HIFIX 9-1

10. SPARE PARTS KIT 10-1

11. MAINTENANCE PARTS 11-1

12. REPLACING PARTS 12-1
12.1 Test Head Air Coupler Replacement Procedure 12-1

13. Product Disposal and Recycle 13-1

APPENDIX 1. MAINTENANCE OF AIR COMPRESSOR PANEL UNIT A1-1
A1.1 Air Pressure Setting A1-1
A1.2 Air Compressor Panel Cable Connection A1-2

APPENDIX 2. PC CHANNEL ASSIGNMENT TABLE A2-1

APPENDIX 3. PHOTOELECTRIC SMOKE DETECTION SYSTEM A3-1
A3.1 Maintenance for Environmental Processor A3-1
A3.2 Smoke Sensor Specifications A3-2
A3.3 Smoke Detection System Block Diagram A3-2
A3.4 Workaround List A3-3
A3.4.1 What to Do When a Problem Occurs A3-3

APPENDIX 4. LCD MONITOR SETUP A4-1
A4.1 Setup for V0108A (TOTOKU 15-inch LCD Monitor) A4-1
A4.1.1 TC6/TC7 Setup A4-1
A4.1.2 Location of the Screen Setting Buttons A4-2
A4.1.3 Screen Adjustment A4-3
A4.2 Setup for SYNC MASTER 912T (SAMSUNG 19-inch LCD Monitor) A4-4
A4.2.1 Turning on the SYNC MASTER 912T Power A4-4
A4.3 Setting the Resolution A4-5

APPENDIX 5. DISK STORAGE JUMPER SETTING A5-1
A5.1 AHN-DK32DJ*36 and AHN-DK32EJ*36 ..... A5-1
A5.2 WBL-H3610190BLK A5-4

APPENDIX 6. HOW TO USE TC7 CD-RW A6-1
A6.1 Notes on Using CD-RW A6-1
A6.2 How to Use a CD-RW A6-2

APPENDIX 7. NOTES AND SOLUTIONS THAT SHOULD BE TAKEN WHEN THE TC7 IS REPLACED A7-1
A7.1 The Error that Occurs when Solaris Starts after the TC7 Is Replaced ... A7-1
A7.2 Graphic Card A7-2
A7.3 Solutions A7-3

APPENDIX 8. HOW TO DRAIN THE FILTER REGULATOR A8-1

A8.1 Removing the AIR CONTROL UNIT and Air Control Meter Unit A8-1

A8.2 Draining the Filter Regulator A8-2

LIST OF ILLUSTRATIONS

No.	Title	Page
2-1	The PB Control Switches	2-1
2-2	AC CONT Panel	2-2
3-1	Removing the Fan Block for the Unit Power Supply	3-5
3-2	Removing the Fan Block for the DPU Unit	3-6
3-3	Removing the Unit Power Supply	3-7
3-4	Marker on A Cable	3-8
3-5	Terminal Numbers on Unit Power Supply (1)	3-8
3-6	Terminal Numbers on Unit Power Supply (2)	3-8
3-7	Terminal Numbers on Unit Power Supply (3)	3-9
3-8	AC CONT Panel and MODE SELECT Switch Panel	3-11
3-9	TC6 CPU UNIT	3-12
3-10	TC7 CPU UNIT	3-13
5-1	Board Handle (KH9-90287)	5-2
5-2	Detaching and Attaching the Board	5-2
5-3	Test Head Board Handle	5-3
5-4	Detaching/Attaching Test Head Board	5-3
5-5	TH (1)	5-4
5-6	How to Take Out the Tube	5-5
5-7	Procedure for Replacing the Test Head Board Power Supply	5-7
6-1	System Layout	6-1
6-2	TC6 Main Frame Layout (Front View)	6-2
6-3	TC7 Main Frame Layout (Front View)	6-3
6-4	Arrangement Inside the Main Frame (REAR VIEW)	6-4
6-5	Main Frame Power Supply Layout	6-5
6-6	TC6 MF Safety Device Mounting Position (Front View when Setting UP FLOW)	6-6
6-7	TC7 MF Safety Device Mounting Position (Front View when Setting UP FLOW)	6-7
6-8	MF Safety Device Mounting Position (Rear View when Setting UP FLOW)	6-8
6-9	TC6 MF Safety Device Mounting Position (Front View when Setting DOWN FLOW)	6-9
6-10	TC7 MF Safety Device Mounting Position (Front View when Setting DOWN FLOW)	6-10
6-11	MF Safety Device Mounting Position (Rear View when Setting DOWN FLOW)	6-11
6-12	TH Safety Device Mounting Position	6-12
6-13	Main Frame Center of Gravity Diagrams	6-13
6-14	Main Frame Structure Diagram	6-14
8-1	Tester Bus Wiring Diagram	8-1
8-2	TC6 Wiring Diagram	8-2
8-3	TC7 Wiring Diagram	8-3
8-4	DPU Wiring Diagram	8-4
8-5	TH BWB Cable Wiring Diagram (1)	8-5
8-6	TH BWB Cable Wiring Diagram (2)	8-6
8-7	200 V AC Connection Diagram (1)	8-7
8-8	200 V AC Connection Diagram (2)	8-8
8-9	270 V DC Wiring Diagram (1)	8-9

List of Illustrations

No.	Title	Page
8-10	270 V DC Wiring Diagram (2)	8-10
8-11	SYSTEM ON/OFF Wiring Diagram (1)	8-11
8-12	SYSTEM ON/OFF Wiring Diagram (2)	8-12
8-13	SYSTEM ON/OFF Wiring Diagram (3)	8-13
8-14	DC Power Supply Wiring Diagram (1)	8-14
8-15	DC Power Supply Wiring Diagram (2)	8-15
8-16	DC Power Supply Wiring Diagram (3)	8-16
8-17	Sensor Cable Wiring Diagram	8-17
8-18	AC CONT Wiring Diagram	8-18
8-19	DMM Wiring Diagram	8-19
8-20	FG Wiring Diagram	8-20
8-21	IDDQ Cable Connection	8-21
12-1	Air Connector A Removal	12-1
12-2	Air Connector B and Coupler Base Removal	12-2
12-3	Coupler Removal	12-3
A1-1	AIR CONTROL UNIT	A1-2
A4-1	Location of the LCD Monitor Setup Buttons	A4-2
A5-1	Hard Disk Top View	A5-1
A5-2	Hard Disk Bottom View	A5-2
A5-3	Mini Jumper Setting	A5-3
A5-4	Hard Disk Top View	A5-4
A5-5	Jumper Location	A5-4
A5-6	Jumper	A5-5
A5-7	Jumper Pin Locations and Default Values	A5-5
A5-8	Mini Jumper Setting	A5-5
A8-1	Removing the Screws	A8-1
A8-2	Removing Units	A8-2
A8-3	Draining	A8-2

LIST OF TABLES

No.	Title	Page
2-1	Boards for the Procedure (1)	2-8
2-2	Boards for the Procedure (2)	2-9
2-3	Boards for the Procedure (3)	2-10
3-1	Periodic Inspection Items	3-3
3-2	MODE SELECT SW Code	3-11
3-3	Relationship between LEDs code and START DIAG	3-17
3-4	Relationship between STATUS Codes and System Monitor Self-diagnosis	3-18
3-5	Relationship between STATUS Codes and Monitor I/F Communication Diagnosis	3-18
3-6	Relationship between STATUS Codes and TC Communication Diagnosis	3-18
3-7	Relationship between STATUS Codes and Error Processing Sequence	3-19
3-8	Relationship between the STATUS Codes and Suggested Actions	3-20
3-9	Monitor Interface Error Code	3-23
4-1	Specifications of the TC6 Unit LEDs	4-1
4-2	Specifications of the TC7 Unit LEDs	4-1
4-3	Specifications of the DP Unit LEDs	4-3
4-4	Specifications of the Monitor I/F LEDs (TC6)	4-4
4-5	Specifications of the Monitor I/F LEDs (TC7)	4-4
6-1	Main Frame Unit Power Supply Specification Table	6-15
6-2	TH Unit Power Supply Specification Table	6-15
7-1	TC6/TC7 Mounting Board Location	7-1
7-2	MONITOR IF and IO IF Mounting Board Location	7-1
7-3	DPU Mounting Board Location	7-1
7-4	TH Mounting Board Location	7-2
A1-1	Prober Control Cable Connection	A1-3

1. OVERVIEW

Please read the “IC TEST SYSTEM SAFE HANDLING GUIDE” before reading this manual.

1.1 General Precautions

1.1.1 Environmental Conditions

(1) Use your test system within the scope of environmental conditions that are specified in the “T6573/T6563/T6533 Production Description Manual (8350430).” Note that using the test system in areas with temperatures exceeding the recommended range can shorten the operating life of the system.

(2) If the ambient humidity exceeds the operating humidity range when the system is idle, wait until the humidity falls within the operating range before turning on the power. When installing an air conditioning system, make sure it has a humidifier.

(3) Since the magnetic disk drive is susceptible to vibration, be careful not to apply vibration to it, even when it is not operating. If the magnetic disk drive needs to be moved and exposure to vibration is unavoidable, please contact ADVANTEST.

(4) The test system generates a large amount of heat and as a result uses a fan cooling system to prevent overheating. Dust and dirt may collect in the test system over time, causing the degrading the effectiveness of the cooling system, and this may eventually shorten the equipment life. To help prevent this, keep the room where the test system is installed as clean as possible, and prohibit smoking.

1.1.2 Handling Precautions

(1) When using the test system software, follow instructions in the “Viewpoint System Startup Guide (8335054).”

(2) To change the TC host name, refer to the “Viewpoint System Startup Guide (8335054).” Also, if the test system has a HRS, change its settings referring to the “HRS Software User’s Manual (8269048).”

(3) When not using the magnetic tape drive or line printer, turn off the power to these pieces of equipment. Remove the tape from the drive and keep it in a safe place.

(4) When using the test system, always make sure its doors, panels, and station covers are attached properly.

(5) The performance board has device power supply outputs and driver outputs terminals. Do not short these together or to the ground unless absolutely necessary. Do not use external power supplies for the performance board. The performance board contains utility power supplies VCC, VEE, +15 V, and -15 V. If additional power supplies are required, use a DC-DC converter with VCC or VEE, etc. Furthermore, RLVCC is provided for relays control.

(6) Minimize the number of times the test system is turned on and off.

(7) Make sure the fans are stopped before you insert or remove a connector or board to and from the test system.

(8) If you are going to move the test system, always contact ADVANTEST beforehand.

(9) For details on the HSCLK option, refer to “VLSI TEST SYSTEM High speed clock option REFERENCE MANUAL (8700067)”.

(10) Lithium batteries are used in the TC6 and TC7. When disposing of the test system, follow the industrial waste disposal laws and regulations in your company.

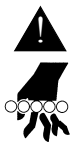

WARNING!
When working with more than two person, make sure safety of others.

1.1.3 Test Precautions

(1) Most devices, not only MOS but bipolar devices as well, may be damaged by static induction during handling. When handling devices, always be sure to wear the included grounding wristband.

(2) When using an oscilloscope or similar unit to observe the input/output waveforms of a device during testing, connect the ground terminal to the tester's ground before connecting the probe. Detach ground connections after you have finished disconnecting the probe and all other units.

(3) After starting the tester, wait for at least 30 minutes before using the system.

1.1.4 Board Replacement Precautions

(1) Before inserting or removing a board, always make sure the power supply to the test system is turned off. Insert or remove the board gently and never place a charged material on the board.

(2) The boards used in the test system are interchangeable and can easily be replaced as long as they have been manufactured to the same standard. When replacing boards, execute the initialize/calibration sequence to update the system board information files. (Refer to Section 2.4, "System Maintenance," and Section 5.7, "Operation when Replacing Boards.")

1.1.5 Precautions for Abnormal Test System Shut Down

If the power supply is shut down by external factors (e.g., lightning), the files may be damaged. When the system is restarted, the command fsck (file system check) automatically repairs as much damage as possible. However, if the system is severely damaged, you will be asked by fsck for instructions. For details, refer to the explanation for fsck in the "Command Reference Manual" from Sun Microsystems, Inc.

1.1.6 Initial Settings of DMM (R6581T)

(1) Setting GPIB addresses

Press the [MENU] key.

Choose GPIB using the ◁ and ▷ keys, then press the [ENTER] key.

Choose ADDRESS using the ◁ and ▷ keys, then press the [ENTER] key.

Set ADDRESS to 24 using the △ and ▽ keys, then press the [ENTER] key.

Choose LANGUAGE using the ◁ and ▷ keys, then press the [ENTER] key.

Choose ADVANTEST using the ◁ and ▷ keys, then press the [ENTER] key.

Press the [HOME] key.

2. SYSTEM OPERATION

2.1 Operation on Performance Board (PB) Switch Panel

(1) Locking/ unlocking the performance board (see Figure 2-1.)

During manual testing, use the switches at the front of the test head. The switches located here are MB LOCK and MB FREE, the appropriate light turns on depending on whether the performance board is locked or free.

(2) The utility power supply (see Figure 2-1.)

During manual testing, use the UTILITY PS switch located at the front of the test head. This switch allows you to turn the utility power supplies fed to the performance board (±15 V, VCC, VEE, RLVCC) on or off. However, this switch can only be used if the performance board is locked.

The UTILITY PS switch automatically goes on when the performance board is locked and goes off when the performance board is unlocked.

Note: ***The UTILITY PS switch cannot be used while using the handler remote control box.***

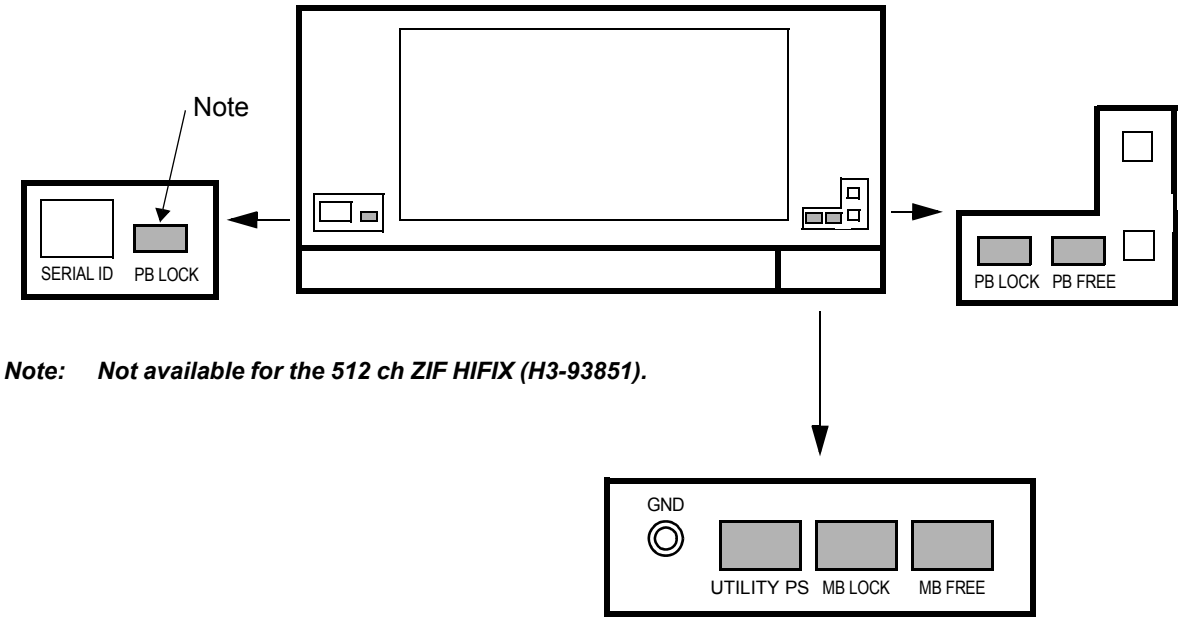

Note: ***Not available for the 512 ch ZIF HIFIX (H3-93851).***

Figure 2-1 The PB Control Switches

2.2 Starting the Test System (Normal Mode)

All test system startup operations are managed by the system monitor. Sensors and power supply faults are checked by the system monitor and monitor interface. If no faults are found, the test system starts up normally. If a fault is found when starting the system, the power supply goes off automatically.

System monitor documentation rules

□ mark:	Denotes information that needs to be verified.
△ mark:	Denotes the method of operation.
▲ mark:	Denotes possible work around or solution.
LED:	Denotes the STATUS message display by LED on the AC CONT panel unless otherwise noted.
Monitor I/F:	Denotes the monitor interface unless otherwise noted.
0xXX:	Denotes hexadecimal representation of numbers.

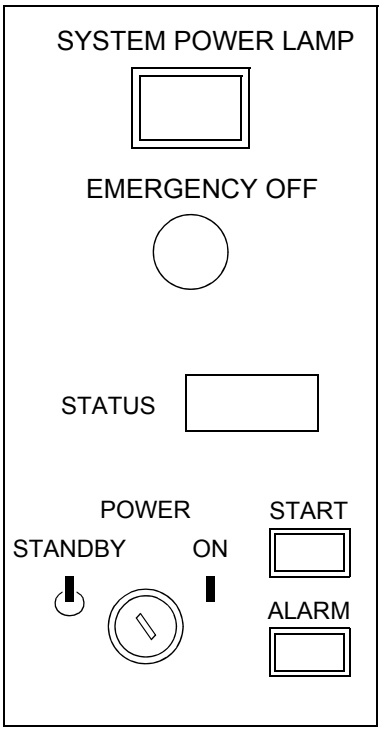

Figure 2-2 AC CONT Panel

(1) Power On Procedure

□ Check 1:	Make sure that the EMERGENCY OFF (EMO) switch has been reset.
□ Check 2:	Make sure that the key switch on the AC CONT panel is in the off position.
△ Operation 1:	Hold down the START switch on the AC CONT panel while you perform check 4.
□ Check 4:	Make sure that the LED and ALARM lamps on the AC CONT panel are lit.
△ Operation 2:	Turn the key switch on. The TC and MF are powered on in that order.
□ Check 5:	Make sure that the LED lamp on the AC CONT panel reads 0 x 108.

This completes the procedure for turning the power on.

0x000:	Waiting status for the key switch to be turned on.
0x100:	Waiting status for the key switch to be turned on.
0x101:	The power supply to the TC is turned on.
0x102:	When the ALARM lamp on the AC CONT panel is lit, only the TC is turned on, with the system waiting for a ready signal from the ENGINE. When the ALARM lamp on the AC CONT panel is off, both TC and MF are turned on, with the system waiting for a ready signal from ENGINE.
0x103:	When the ALARM lamp on the AC CONT panel is lit, only the TC is turned on, with the system waiting for a ready signal from TC. (ready from the ENGINE passed the diagnosis.) When the ALARM lamp on the AC CONT panel is off, both TC and MF are turned on, with the system waiting for a ready signal from TC. (ready from the ENGINE passed the diagnosis.)
0x104:	When the ALARM lamp on the AC CONT panel is lit, only the TC is turned on, and a ready signal from both TC and the ENGINE both passed the diagnosis. When the ALARM lamp on the AC CONT panel is off, both TC and MF are turned on, and ready from TC and ready from the ENGINE both passed the diagnosis.
0x106:	The AC CONT panel may be faulty.
0x107:	Only the TC is turned on.
0x108:	Both TC and MF are powered on.

(2) Power Off Procedure

△ Operation 1: Shut down the TC.

□ Check 1: Make sure that the shutdown operation is completed.

△ Operation 2: Turn the key switch off. The MF and TC are turned off in that order.

□ Check 2: Make sure that the STATUS display changes to 0x100 and that the fans stops (30 seconds later).

△ Operation 3: Press the EMO switch to turn the main power supply off.

This completes the procedure for turning the power off.

2.3 Resetting the EMO Switch

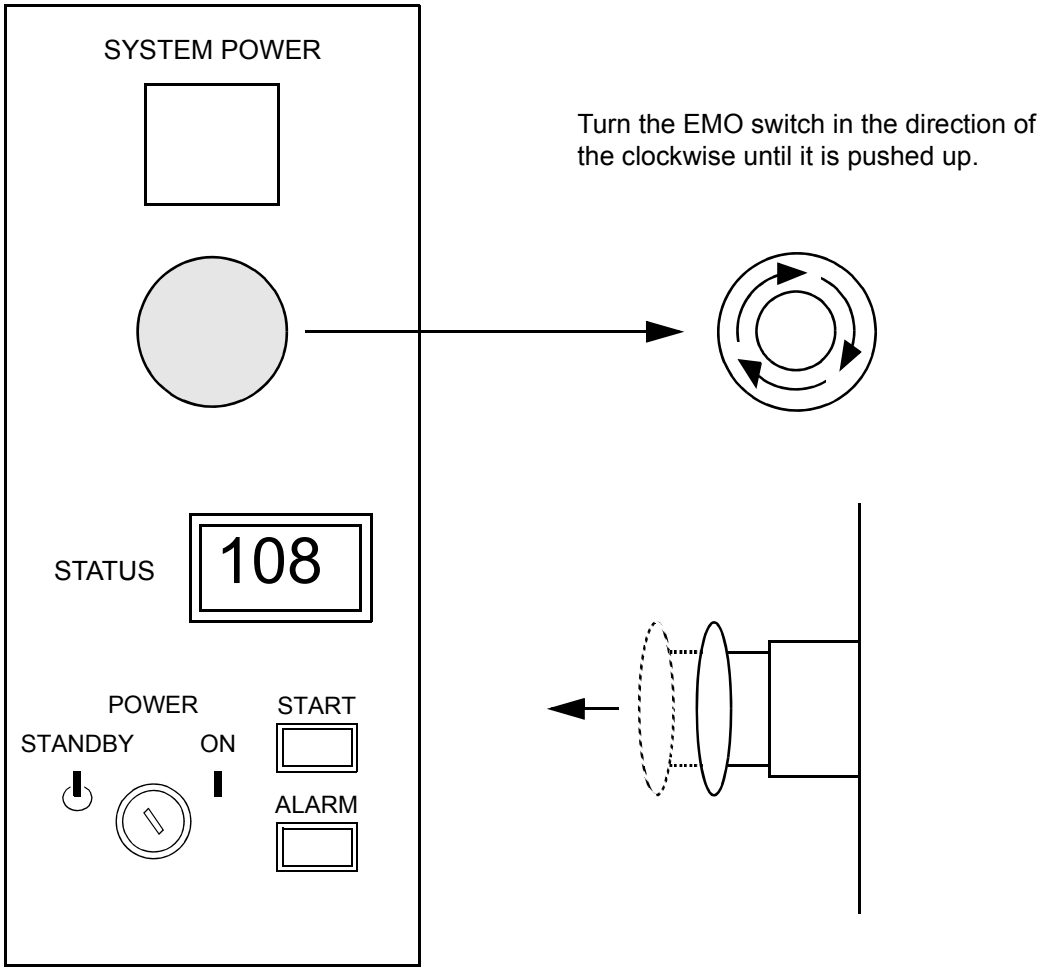

2.4 System Maintenance

To perform a system diagnosis, follow the procedure below.

1. Diagnosis (initialization)
2. Calibration

2.4.1 Diagnosis

Perform diagnosis as described below.

(1) Periodic inspection

The should be checked periodically to make sure its performance has not degraded.

(2) Board Replacement

Check the new board to see that it operates normally.

For details on how to perform this check, refer to each diagnose manual.

2.4.2 Initialization

In diagnose sessions, the initialization data required for tester operation is generated. You can perform an initialization only. Since this data is not retained after tester startup, always be sure to perform diagnosis, initialization, or initialization recovery. The initialization data is specific to each board, so there is no need to save it during periodic inspection.

For details on how to perform the above, refer to the “Initialization/calibration Operating Procedure (8350438).”

2.4.3 Calibration

Perform calibration as described below.

(1) Long-term periodic inspection

To prevent the tester’s performance degradation due to changes with the passage of time, perform calibration along with diagnosis. Be sure to save the calibration data during this calibration.

(2) Calibration at board replacement

When the PC (pin card) card, the HIFIX and the stick board has been replaced, the tester needs to be calibrated.

For details on how to perform the above, refer to the “Initialization/calibration Operating Procedure (8350438).”

* HSCLK option
  If the HSCLK_CONTACT board has been replaced, the HSCLK needs to be calibrated.
  For details on the calibration method, refer to "High speed clock option TIMING CALIBRATION OPERATING PROCEDURE (8700070)".

2.5 Using the Tester after Installation, Inspection, and Board Replacements

2.5.1 After Installation/System Calibrations

Follow the procedure shown below.

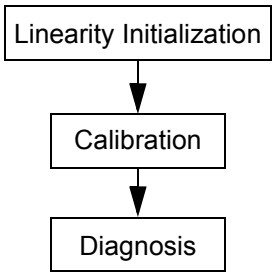

2.5.2 After Periodic Inspections

Execute the diagnostic program.

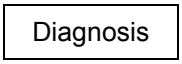

2.5.3 After Board Replacements

Use one of the following procedures (1), (2) and (3) depending on the board type.

(1) When the boards listed in Table 2-1 have been replaced, perform the work using the following procedure.

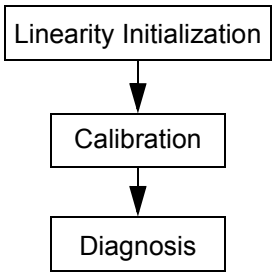

Table 2-1 Boards for the Procedure (1)

Unit Name	Slot No.	Board No.	Circuit Name
TH	4	BIS-029043	STICK (T6575)
		BIS-029043X02	STICK (T6565)
		BIS-029043X03	STICK (T6535)
TH	7, 8, 9, 10, 11, 12, 13, 14	BMS-029040	PC (64 MW)
TH	16	BIS-029044	DCAP + AFM
		BIS-029044X02	DCAP
TH	1	WUN-11V2R5VDM3V5VA	TH BPS1
TH	2	WUN-11V2R5V5V2R5V5A	TH BPS2
TH	3	WUN-5V2R5V3B3VA	TH BPS3
TH	19	WUN-11V2R5V3V5V2BA	TH BPS4
TH	20	WUN-11VDM3B2R5VA	TH BPS5

(2) When the boards listed in Table 2-2 have been replaced, perform the work using the following procedure.

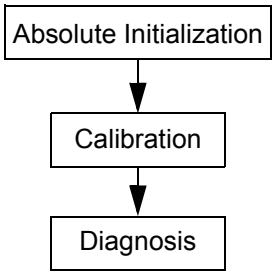

Table 2-2 Boards for the Procedure (2)

Unit Name	Slot No.	Board No.	Circuit Name
HIFIX		H3-93806X02	512 ch HIFIX
HIFIX		H3-94021	512+AV HIFIX
HIFIX		H3-93851	512 ZIF HIFIX

(3) When the boards listed in Table 2-3 have been replaced, perform the work using the following procedure.

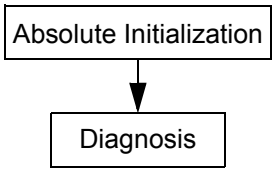

Table 2-3 Boards for the Procedure (3)

Unit Name	Slot No.	Board No.	Circuit Name
DPU	13	BGR-026245	DPU IF
DPU	15	BGR-023713X02	UDC
DPU	14	BGR-023712	UDC CONT
DPU	16, 17, 18, 19	BGR-023711X02	MDC
DPU	1	WUN-11V4B18V	DPU BPS1
DPU	2	WUN-11V2B5V2B3V	DPU BPS2
THPS	UPS11	DPS-001615	THPS 11.5 V
THPS	UPS18	DPS-001742	THPS -8 V
TH	15	WUN-T6500IDDQX02	IDDQ
TH	17	BIS-026339X02	AD/DA (500k Sampling)

(4) When a board not listed in Table 2-1, Table 2-2 and Table 2-3 or the power supply has been replaced, perform the work using the following procedure.

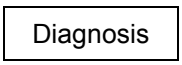

2.5.4 After Board Installation or Removal

After a board has been installed or removed from the DPU or TH unit, follow the procedure shown below.

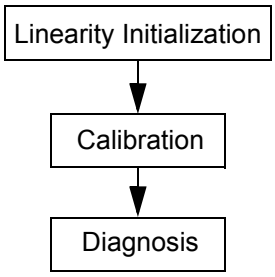

Make sure that the above procedure has been performed. While any boards you have installed or removed may not affect system's measurement accuracy, they may still affect temperatures of other boards in the rack.

3. MAINTENANCE OPERATION

CAUTION!
The fault repairs described in this and following chapters can only be performed by those who have taken lectures in the ADVANTEST maintenance courses, and should not be attempted by anyone else.
When performing maintenance on the test system, put up a warning tag on the AC control panel indicating that the tester should not be operated to prevent the power from being inadvertently turned on.
Be sure to lock the breaker using a padlock.
The procedure for putting up a warning tag and locking out the system are detailed in paragraph (4) of Chapter 3, "BASIC PRECAUTIONS," in the "IC TEST SYSTEM SAFE HANDLING GUIDE."

Board replacement Precautions

Always turn the power supply off and make sure that the fan has stopped before attempting to replace boards (Before actually replacing the board, read Section 3.7, "When System Does Not Start Properly")
If the board has a cable attached at the top, detach the cable, remove the board from the tester and then insert the new board.

When replacing the IO IF, monitor interface, or TC unit, turn the key switch off and then press the EMERGENCY OFF switch to turn the main power off.

3.1 Hot Work

Hot work refers to performing system calibration or maintenance while the power to the test system is turned on. The following categories are used to describe the situation such work is performed under. Hot work classification is indicated in each maintenance or calibration procedure. For categories 3 to 5, there is a danger of receiving an electric shock during work, so please use caution under these circumstances.

Type 1: No power is being applied to the unit at all.

Type 2: Although the power to the unit is turned on, there is no possibility of touching current-conducting parts.

Type 3: The power to the unit is on and there is a possibility of touching current-conducting parts. The voltage present at these locations is 30 rmsV, 42.2 peakV, 240 VA or less.

Type 4: The power to the unit is on and there is a possibility of touching current-conducting parts. The voltage present at these locations is 30 rmsV, 42.2 peakV, 240 VA or more or RF energy exists.

Type 5: The power to the unit is on and it is necessary that a person puts a part of his body in the frame.

3.2 Periodic Inspection Items

CAUTION!

Maintenance procedures should only be used by persons who have received maintenance training at an authorized technical training center.

To prevent the test system power from being turned on accidentally, a warning tag saying, "Maintenance service is under way. The test system is not available" must be attached to the AC control panel before starting any maintenance inside the test system.

Make sure that the circuit breaker is locked with a padlock.

For information on how to lock and tag a circuit breaker, refer to paragraph (4) in Chapter 3, "Basic Precautions" of "IC Test System Safe Handling Guide."

(1) Periodic inspections are necessary to maintain the performance of the test system. Periodic inspection items are listed in Table 3-1.

(2) Reed relays are used at the STICK in the test station. Lifetime of the reed relays is approximately 3 x 10^8 (at no load).

(3) In the test station, to remove or mount the HIFIX by using the air, the following air source is required.

Air source: 0.49 MPa to 0.69 MPa dry air
Air consumption: 5 Nl/min to 10 Nl/min

If the drain pipe is filled with the moisture and oil, which were contained in the air, place a cloth around the drain outlet to prevent the moisture and oil from adhering to the electronic components (boards and cables) at the bottom of the test station, then drain the moisture and oil.

Table 3-1 Periodic Inspection Items

Weekly inspection	• Check operation using the diagnostic program.
Monthly inspection	• Check the operation of the test system's internal cooling fan.
Semi-annual inspection	• Clean the air filter mounted in the main frame. • Clean the air filter for the rotating frame. • Clean the test head air filter.

① Board unit air filter

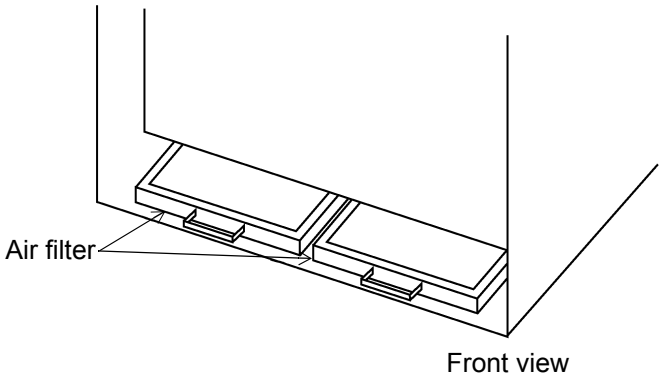

② Power supply unit air filter

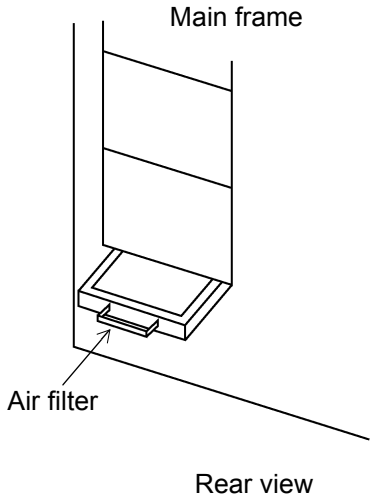

③ Test head unit air filter

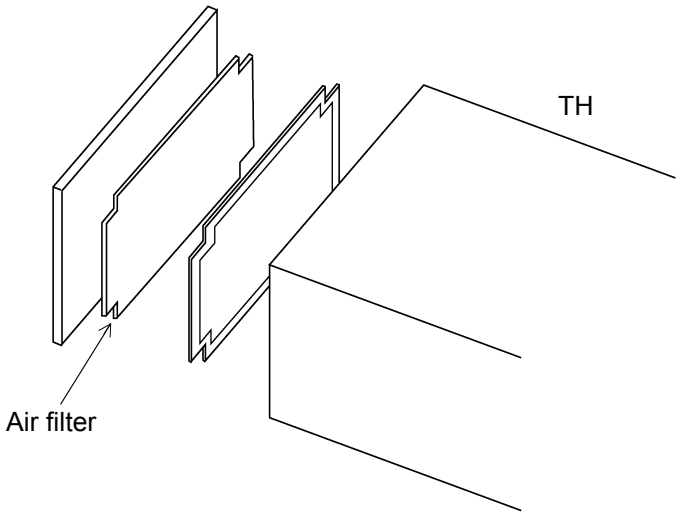

Remove the air filter from the unit and clean it using a vacuum cleaner.

3.3 Replacing the Fan Block (Hot Work Type 1)

WARNING!
Turn off the AC control panel breaker from which power is fed and make sure that the fans have completely stopped. Before you start work, lock out the breaker and put a warning tag. For details about lock-out and tag-out procedures, refer to paragraph (4) of Chapter 3, "BASIC PRECAUTIONS," in the "IC TEST SYSTEM SAFE HANDLING GUIDE."

If you used the power-on key switch to shut off the system's power supply, note that the fan will continue to run for about 30 seconds after the switch has been turned off.

3.3.1 Replacing the Fan Block for the Unit Power Supply

(1) Remove all cables connecting to the fan block.

(2) Unfasten four screws on the front of the fan block (① in Figure 3-1).

(3) Pull the fan block toward you to remove it.

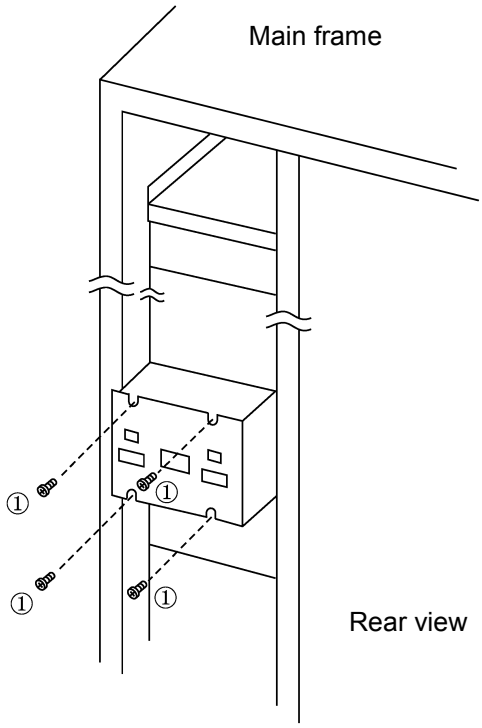

Figure 3-1 Removing the Fan Block for the Unit Power Supply

3.3.2 Replacing the Fan Block for the Unit

(1) Remove all cables connected to the fan block.

(2) Unfasten screws of the fan block (① in Figure 3-2).

(3) Pull out the fan block toward you.

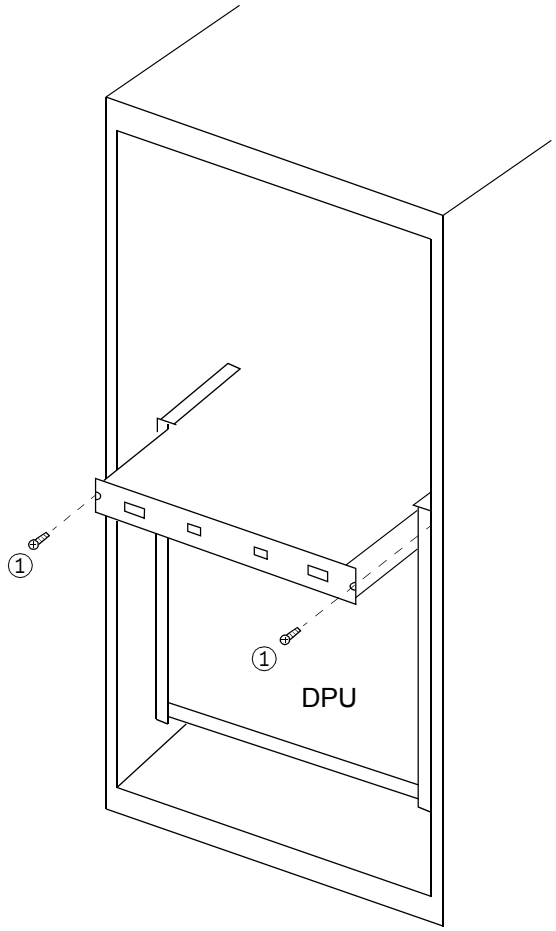

Figure 3-2 Removing the Fan Block for the DPU Unit

3.4 Replacing the Unit Power Supply

CAUTION!
Turn off the AC control panel breaker from which power is fed and make sure that no current is flowing on the AC input side of the unit power supply. Before you start work, lock out the breaker and put up a warning tag. For details about lock-out and tag-out procedures, refer to paragraph (4) of Chapter 3, "BASIC PRECAUTIONS," in the "IC TEST SYSTEM SAFE HANDLING GUIDE."

For power supply layout and power supply standards, refer to Chapter 6, "UNIT, POWER SUPPLY LAYOUT, AND VOLTAGE SPECIFICATION."

3.4.1 Procedure for Removing the Unit Power Supply (Hot Work Type 1)

(1) Remove all cables connected to the unit power supply.

(2) Remove the four screws on the front of the unit power supply (① in Figure 3-3).

(3) Pull the unit power supply toward you to remove it.

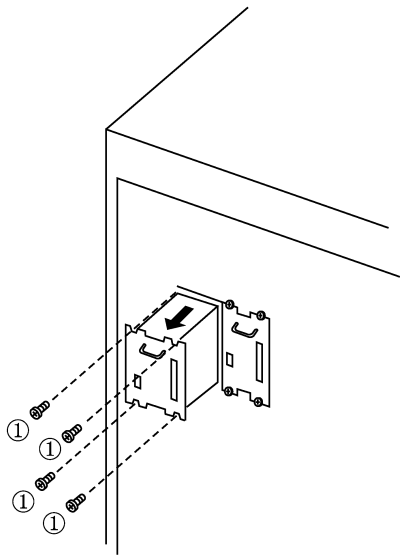

Figure 3-3 Removing the Unit Power Supply

3.4.2 Precautions to Be Taken when Installing the Unit Power Supply

Each cable has a cable marker which has the location number.

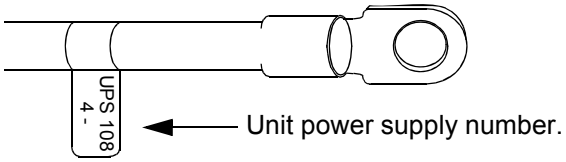

Figure 3-4 Marker on A Cable

Connect the cable with its terminal number marked with “+” to the “+” output terminal of the unit power supply and one marked with “-” to the “-” output terminal of the unit power supply. For power supply terminal numbers, see Figure 3-5 through Figure 3-7.

(1) AC-DC Power supply

WBL-PS3750W

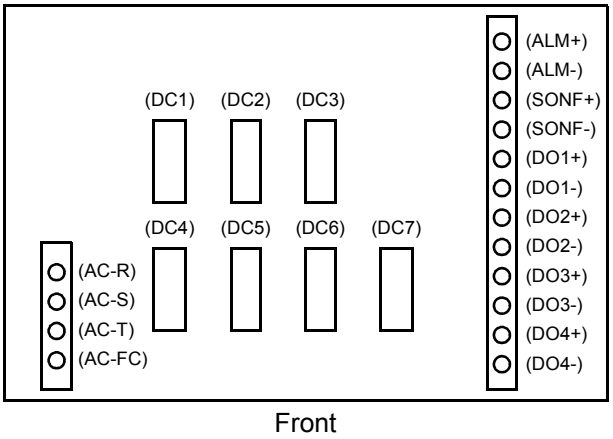

Figure 3-5 Terminal Numbers on Unit Power Supply (1)

(2) DC Power supply

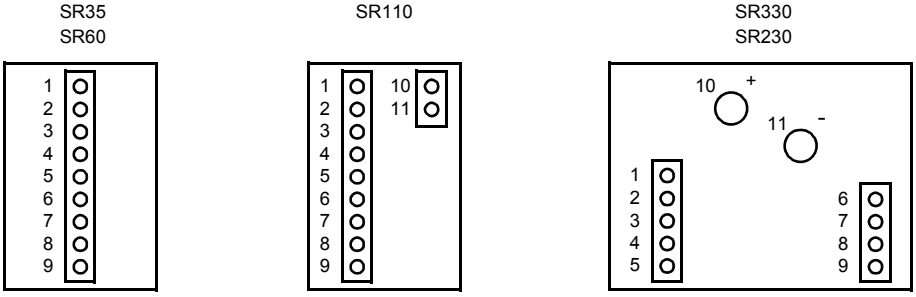

Figure 3-6 Terminal Numbers on Unit Power Supply (2)

(3) Power Supply for boards

WBL-PSXXXX

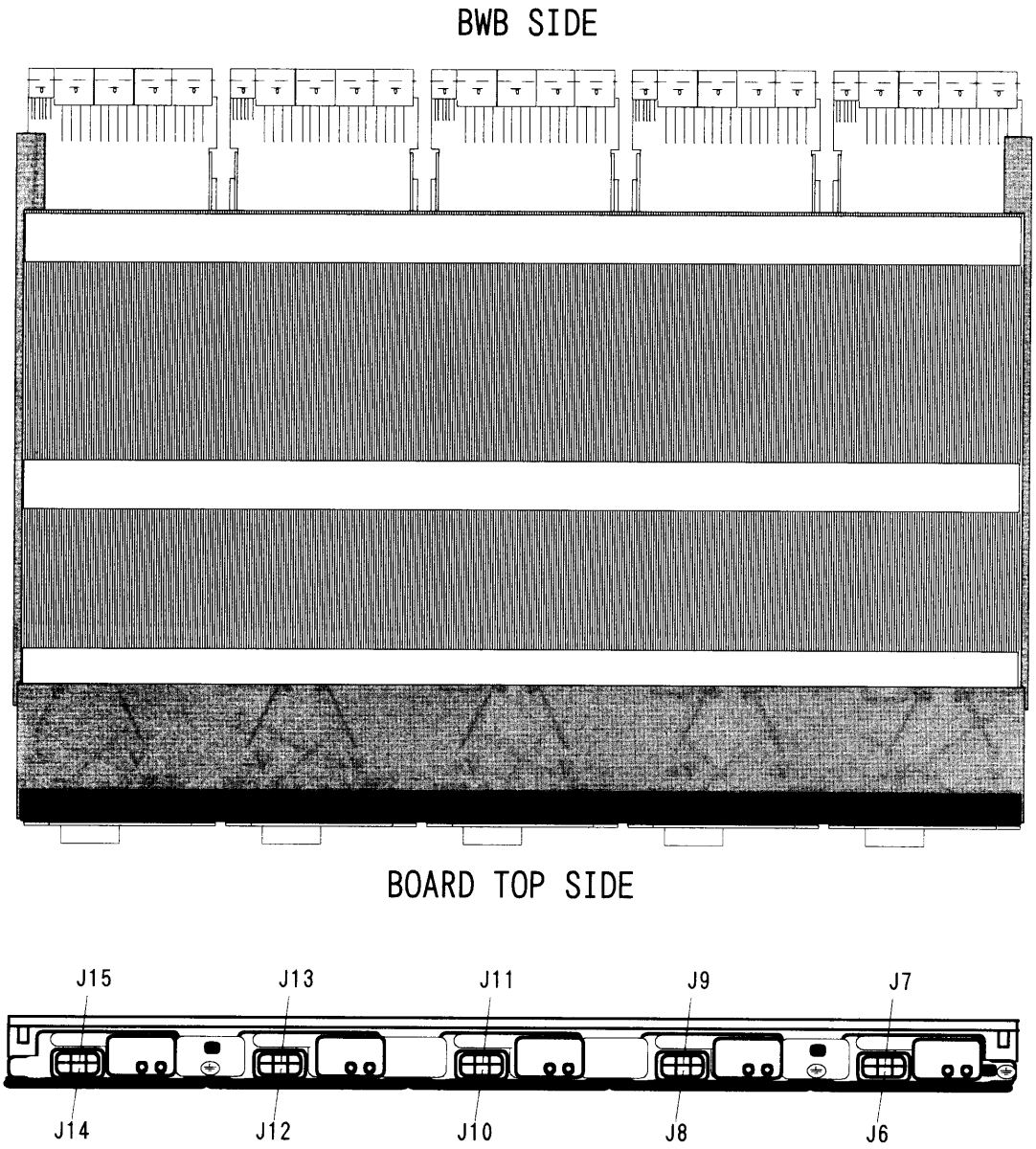

Figure 3-7 Terminal Numbers on Unit Power Supply (3)

3.5 Precautions to Be Taken when Replacing AC Power Supply (AC CONT)

When removing or attaching the AC power supply (AC CONT) for fault or other reasons, make sure it is handled by at least two people.

3.6 Opening/Closing the Frame Panel

(1) Make sure that there are hexagonal wrench keys at the top and bottom of the frame panel.

(2) Insert a 6 mm hexagonal wrench into the panel key and turn it counterclockwise to open the panel to the front.

(3) Push the panel's hinge lever downward. The hinge shaft lowers and comes off from the hinge holder.

(4) Lift the panel to remove the hinge shaft from the hinge holder. In this way, the panel can be completely removed from the frame.

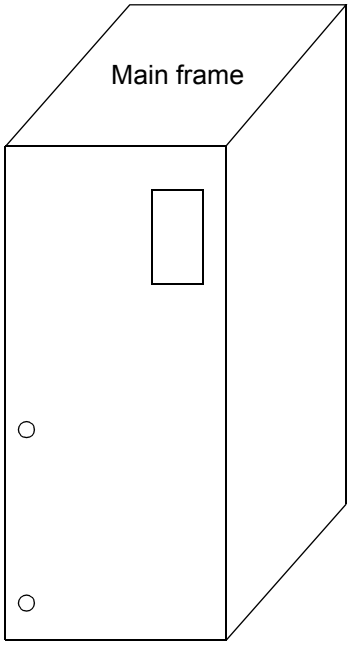

Table 3-2 MODE SELECT SW Code

Mode selection code	Explanation
0×00	Normal mode
0×D0	System monitor self-diagnosis
0×D1	Monitor I/F communication diagnosis
0×D2	TC communication diagnosis
0×D3	System type indication
0×F0 to 0×F3	Debug mode
0×FE	ROM monitor
Others	Unused

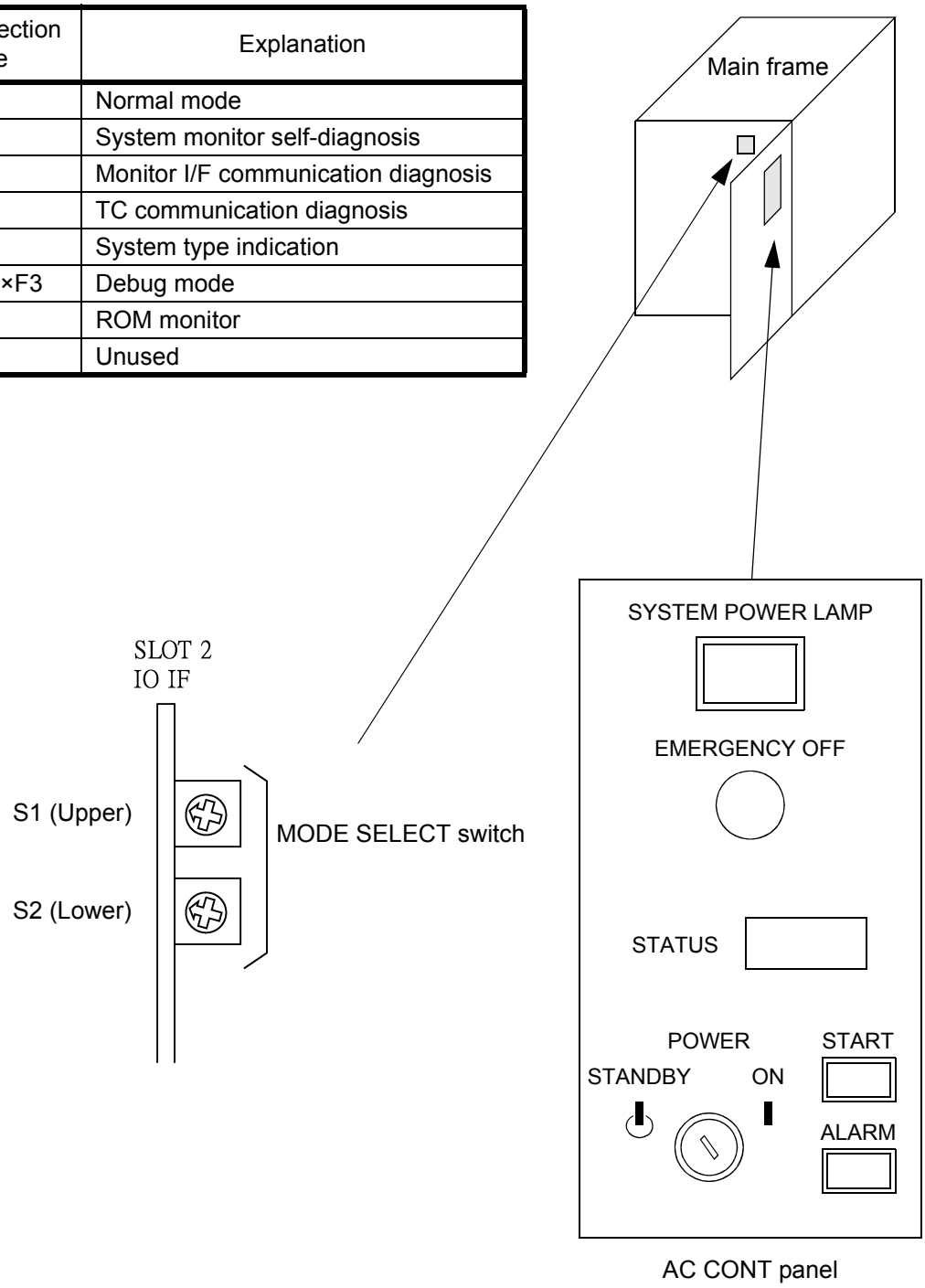

Figure 3-8 AC CONT Panel and MODE SELECT Switch Panel

TC6/TC7 CPU UNIT switch

The SW1 switch on the front of the TC6/TC7 CPU UNIT controls the CPU power supply in the CPU unit and is used to recover the system if the system is shut down by the init5 command.

CAUTION!

If the switch is pressed while the system is on, the CPU power supply is turned off and the EWS IF fatal voltage error (error code: 0x704) occurs.

To recover the system, follow the procedure described in Section 3.7.3, “Recovering the System after Being Shut down by the init5 Command.”

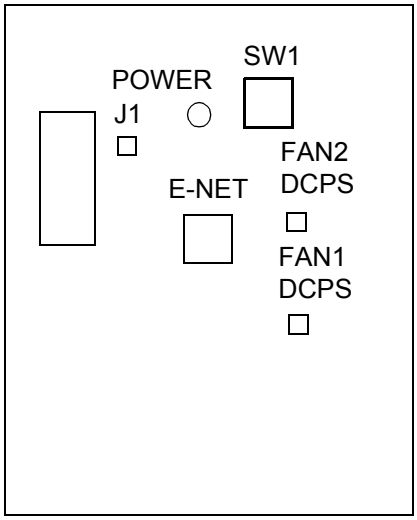

Figure 3-9 TC6 CPU UNIT

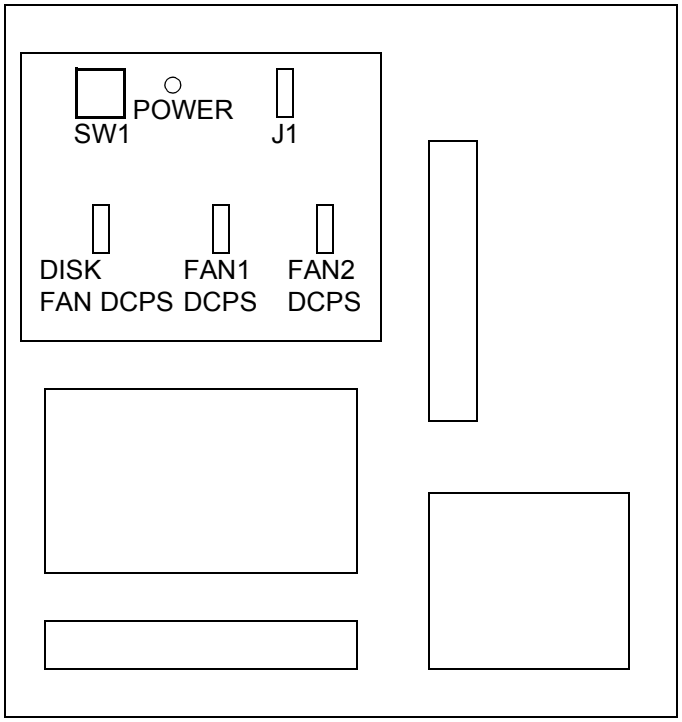

Figure 3-10 TC7 CPU UNIT

3.7 When System Does Not Start Properly

Follow Table 3-8, “Relationship between the STATUS Codes and Suggested Actions.”

- Normal mode: Monitoring the system operation. When a fault is found, the power supply is turned off.
- Debug mode: Monitoring the system operation, except for system monitor.

3.7.1 When the System Monitor Does Not Start

(1) When the power to the system monitor does not turn on

□ Check 1: The power supply is turned off after you release the START switch.

▲ Action 1: Check the pilot lamps to see that all breakers are turned on.

(2) When the power to the system monitor turns on

□ Check 1: Check the STATUS code on the AC CONT panel that was displayed last time. (See Table 3-8)

(3) When the power turns off before checking STATUS code

□ Check 1: Make sure that the power to the system monitor is off. If not, press the EMO (EMERGENCY OFF) switch to turn the power to the system monitor off.

△ Operation 1: Turn the key switch on the AC CONT panel off.

△ Operation 2: Set MODE SELECT to 0xF0. (Debug mode)

△ Operation 3: Press the START switch on the AC CONT panel.

□ Check 2: Check the STATUS code on the AC CONT panel. (See Table 3-8) Leave the key switch on the AC CONT panel turned off. If the key switch is turned on, a system error may occur.

(4) Reset Method

△ Operation 1: Press the EMO (EMERGENCY OFF) switch to turn the power to the system monitor off.

△ Operation 2: Set MODE SELECT to 0x00. (Normal mode)

△ Operation 3: Press the START switch on the AC CONT panel.

Thus, the power to the system monitor is turned on.

3.7.2 Checking FATAL ERROR

(1) When the LED lamp is on

△ Operation 1: Turn the key switch on the AC CONT panel off.

□ Check 1: Check the LED code on the AC CONT panel. (See Table 3-8)

(2) When the LED lamp is off

△ Operation 1: Turn the key switch on the AC CONT panel off.

△ Operation 2: Press the START switch on the AC CONT panel.

□ Check 1: Make sure that the ALARM lamp on the AC CONT panel is on. If the power immediately turns off even when the lamp is lit, refer to Section 3.7.1, “When the System Monitor Does Not Start.”

□ Check 2: Check the STATUS code on the AC CONT panel. (See Table 3-3)

3.7.3 Recovering the System after Being Shut down by the init5 Command

If the TC6 and TC7 CPU Units are shut down by executing (a): the init5 command (which also turns off the CPU power supply after the test system is shut down) or (b): “Suspend System...” in the pull-down menu, the built-in CPU power supply in the CPU UNIT turns off and a CPU UNIT fatal voltage error (error code: 0x704) occurs.

If this fatal error occurs, follow the procedure described below to recover the test system. The procedure is the same both the TC6 and the TC7. The following description is for the TC7 as example.

(1) Recovering the TC7 (by using the CPU UNIT SW1)

△ Operation 1: Turn off the key switch on the AC CONT panel.

△ Operation 2: Press the EMO (EMERGENCY OFF) switch.
For more information on recovering the EMO switch, refer to Section 2.3, “Resetting the EMO Switch.”

△ Operation 3: Set the MODE SELECT switch to 0xF0. (Debug mode)
For more information on the location and the setting of the MODE SELECT switch, refer to Section 3.6, “Opening/Closing the Frame Panel.”

△ Operation 4: Press the START switch on the AC CONT panel.

△ Operation 5: Set the MODE SELECT switch to 0xF3. (Debug mode)

△ Operation 6: Turn on the key switch.

△ Operation 7: Press and hold the CPU UNIT SW1 switch for approximately one second.

△ Operation 8: When the POWER indicator on the front of the CPU unit lights green and a banner is displayed on the monitor, press the A key while holding down the Stop key then display the ok prompt. If this operation is executed, Operation 9 is not necessary. Move on to Operation 10.

△ Operation 9: If the OS starts running without pressing the A key while holding down the Stop key, shut it down by using any command other than init5 (such as init0).

△ Operation 10: Turn off the key switch.

△ Operation 11: Press the EMO (EMERGENCY OFF) switch.

△ Operation 12: Set the MODE SELECT switch to 0x00. (Normal mode)

△ Operation 13: Press the START switch on the AC CONT panel.

3.8 Starting the System Monitor DIAG

When you want to diagnose the system which has already been started up and is operating, this software allows you to manually diagnose the system.

(1) System monitor self-diagnosis and Monitor I/F communication diagnosis

□ Check 1: Make sure that the STATUS on the AC CONT panel is one of the following.

0x000: During error display, with the system waiting for the key switch to be turned on (blinking)
0x100: Waiting for the key switch to be turned on
0x106: TC is on
0x107: TC is on
0x108: TC and MF are on

Note: Diagnosis is not executed unless in one of the above states.

△ Operation 1: Set the MODE SELECT switch as shown below.

0xD0: For System monitor self-diagnosis
0xD1: For Monitor I/F communication diagnosis

△ Operation 2: Press the DIAG switch.

□ Check 2: Check the STATUS on the AC CONT panel to see if the diagnosis passed or failed. (See the description below.)

When passed: The diagnosis item is displayed on the STATUS for 2 seconds, 0x000 is displayed for 2 seconds, and then the diagnosis item is displayed for another 2 seconds.
When failed: The diagnosis item is displayed on the STATUS for 2 seconds, 0xEEE is displayed for 2 seconds, and then the diagnosis item is displayed for another 2 seconds. (See Table 3-4 and Table 3-5)

Table 3-3 Relationship between LEDs code and START DIAG

Refer to the codes listed below when checking the status

0x070	Initialization check on the system boards
0x071	Read/Write check of SMONI_SYS register
0x072	Read/Write check of SEMO_SEM3 register
0x073	Read/Write check of SMONI_INIT_LVL register
0x074	Increment check of SMONI_SYS register
0x075	Interrupt (MCOM0) check from TC, the ENGINE
0x076	Status check of AC OFF(MF, TC)
0x077	Status check of FATAL EROR Mask
0x078	Read/Write check of LEDs
0x079	Read/Write check of NVRAM
0x07A	Read/Write check of the memory
0x07F	Code when the START DIAG passed

Table 3-4 Relationship between STATUS Codes and System Monitor Self-diagnosis

Refer to the codes listed below when checking the status

0x0B1	Read/write check of SMONI_SYS register
0x0B2	Read/write check of SEMO_SEM3 register
0x0B3	Read/write check of SMONI_INT_LVL register
0x0B4	Increment check of SMONI_SYS register
0x0B5	Interrupt (MCOM0) check from TC, the ENGINE
0x0B6	(Undefined)
0x0B7	(Undefined)
0x0B8	Read/write check of LED
0x0B9	Read/write check of NVRAM
0x0BA	Read/write check of memory
0x0B0	Code when system monitor self-diagnosis passed

Table 3-5 Relationship between STATUS Codes and Monitor I/F Communication Diagnosis

Refer to the codes listed below when checking the status

0x0C1	Read check of NVRAM checksum
0x0C2	Online check of monitor I/F
0x0C0	When monitor I/F communication check is passed

Table 3-6 Relationship between STATUS Codes and TC Communication Diagnosis

Refer to the codes listed below when checking the status

0x0D1	Write of SMONI_TO_TC register and read of SMONI_TO_TC register READ
0x0D2	Write of SMONI_TO_TC register and read of SMONI_TO_TC register (inc data)
0x0D3	READ (inc data)
0x0D4	Read/write of SMONI_STS
0x0D5	Read/write of SMONI_STS (inc data)
0x0D6	Interrupt check
0x0D7	Interrupt check
0x0D8	Interrupt check
0x0D0	Interrupt check When TC communication diagnosis passed

Table 3-7 Relationship between STATUS Codes and Error Processing Sequence

Refer to the codes listed below when checking the status

0x0E1	System monitor error
0x0E2	When Fail_B error is notified from monitor I/F Smoke or temperature error, DIAG, +5 V (monitor I/F power supply)
0x0E3	When Fail_A error is notified from monitor I/F DC power supply, fan, or exhaust air temperature
0x0E4	TC ALARM1 Fuse, temperature, TC main unit fan
0x0E5	TC ALARM2 TC main unit fan power supply error
0x0E6	TC power fail The +5 V, -5.2 V, or -12 V power supply used in TC is faulty
0x0E7	TINT0 error
0x0E8	Error MASK error
0x0E9	AC_CONT error
0x0EA	SYSTEM name error

3.9 System Monitor Error Codes

Table 3-8 Relationship between the STATUS Codes and Suggested Actions

0x000 - 0x00F	System monitor hard initialize	▲ Action 1
0x070 - 0x07F	Start diagnosis	▲ Action 2
0x080	Monitor I/F ONLINE check	▲ Action 3
0x08E	MODE SELECT switch failed	▲ Action 4
0x08F	Waiting for turning off the key switch	▲ Action 5
0x0B0 - 0x0BF	System monitor self-diagnosis	▲ Action 6
0x0E0 - 0x0EF	Type of error processing sequence	▲ Action 9
0x0F0	ROM monitor system monitor mode	▲ Action 10
0x100 - 0x108	Normal mode ON sequence	▲ Action 11
0x600 - 0x6FF	Error code	▲ Action 12
0x700 - 0x7FF	Error code	▲ Action 13
0x800 - 0x8FF	Error code	▲ Action 14
0x900 - 0x9FF	Error code	▲ Action 15
0xA00 - 0xAFF	Error code	▲ Action 16
0xB00 - 0xBFF	Error code	▲ Action 17
0xC00 - 0xCFF	Error code	▲ Action 18
0xD00 - 0xDFF	Error code	▲ Action 19

Corrective action procedure

▲ Action 1 Hard initializing the system monitor. If the STATUS code does not change after waiting for 10 seconds or more, some board in the system monitor may be faulty.

▲ Action 2 Performing Start diagnosis. If an error is encountered, the diagnosis item in error (Table 3-3) is displayed on the STATUS (Note 1) and start diagnosis is executed repeatedly.

▲ Action 3 Performing Monitor I/F ONLINE check. If the STATUS code does not change after waiting for 30 seconds or more, some board in the system monitor may be faulty.

▲ Action 4 The MODE SELECT switch is set to any value other than 0x00. After setting the MODE SELECT switch to 0x00, temporarily turn the key switch off. Then turn it back on again.

▲ Action 5 The key switch had already been turned on before you turned the power to the system on. Temporarily turn the key switch off and turn it back on again.

▲ Action 6 Performing System monitor self-diagnosis. When the diagnosis is completed, PASS or FAIL is displayed on the STATUS (Note 2) before returning to normal operation.

▲ Action 9 Performing the Error processing sequence. If the STATUS code does not change after waiting for 10 seconds or more, some board in the system monitor may be faulty.

▲ Action 10 Placed in ROM monitor mode. The MODE SELECT switch is set to any value other than 0x00. Press the EMO (EMERGENCY OFF) switch to temporarily turn OFF the system monitor power supply. Then set the MODE SELECT switch to 0x00.

▲ Action 11 Refer to the codes listed below when checking the status.

0x000: Waiting for the key switch to be turned on.
0x100: Waiting for the key switch to be turned on.
0x101: The power to the TC is turned on.
0x108: Both TC and MF are powered on.

▲ Action 12-19 Refer to the codes listed below when checking the status.

For the TC6/TC7

0x601:	AC CONT status error when the MF was turned off
0x602:	AC CONT status error when the MF was turned on
0x610:	AC CONT status error when the TC was turned off
0x620:	AC CONT status error when the TC was turned on
0x680:	AC cycle-omitted occurred
0x702/0x000/0x000:	TC6 Option IF voltage error
0x704/0x000/0x000:	TC6 EWS IF voltage error (includes a CPU AC error and interface cable problem)
0x708/0x000/0x000:	TC6 IOIF voltage error
0x710/0x001/0x000:	+12 V SENSE Error
0x710/0x002/0x000:	-12 V SENSE Error
0x710/0x004/0x000:	FAN SENSE Error
0x710/0x008/0x000:	TC6 IO Option SENSE Error
0x720:	TC fan error
0x801:	Monitor I/F communication error
0x802:	System monitor's MASK ENABLE/DISABLE error
0x804:	System name error
0x810:	TC6/TC7 -12 V DC error
0x820:	TC6/TC7 +12 V DC error
0x840:	TC6/TC7 -5.2 V DC error
0x880:	TC6/TC7 +5 V DC error
0x9XX:	XX denotes the unit ID when error occurred
0xA01:	MF fan error
0xA02:	MF temperature error
0xA04:	MF smoke error
0xA80:	Monitor I/F self-diagnosis error
0xB01:	Monitor I/F DC power supply error
0xB02:	Monitor I/F DC REFERENCE error
0xCXX:	XX denotes the location in MF where DC error occurred
0xDXX:	XX denotes the location in MF where DC error occurred

Refer to Section 3.10.

3.10 Monitor Interface Error Codes

Table 3-9 Monitor Interface Error Code

UNIT	ERROR CODE	A01	A02	A04	A20	A80	C01	C02	C04	C08	C10	C20	C40	C80	D01	D02	D04	D08	D10	D20	D40	D80
NC	900	–	–	–	–	DIAG MONI I/F-5 V	(J1-L)	(J1-L)	(J1-L)	(J1-L)	(J1-L)	(J1-L)	(J1-L)	(J1-L)	–	–	–	–	–	–	–	–
MF	901	(J35) FAN	(J35) TEMP	(J35) SMOKE	(J35) AUX	DIAG MONI I/F-5 V	(J1-U)	(J1-U)	(J1-U)	(J1-U)	(J1-U)	(J1-U)	(J1-U)	(J1-U)	–	–	–	–	–	–	–	–
NC	902	(J34) AUX	(J34) AUX	(J34) AUX	(J34) AUX	DIAG MONI I/F-5 V	(J2-L)	(J2-L)	(J2-L)	(J2-L)	(J2-L)	(J2-L)	(J2-L)	(J2-L)	(J2-L)	(J2-L)	(J2-L)	(J2-L)	(J2-L)	(J2-L)	(J2-L)	(J2-L)
DPU	903	(J28) AUX	–	–	–	DIAG MONI I/F-5 V	(J2-U) -60 V	(J2-U) -15 V	(J2-U) -12 V	(J2-U) -5.2 V	(J2-U) 3.3 V	(J2-U) 5 V	(J2-U) 12 V	(J2-U) 15 V	(J2-U) 17 V	(J2-U) 60 V	(J2-U)	(J2-U)	(J2-U)	(J29) HEAT	(J2-U)	(J40) AIR 24 V
NC	904	(J27) AUX	–	–	–	DIAG MONI I/F-5 V	(J3-L)	(J3-L)	(J3-L)	(J3-L)	(J3-L)	(J3-L)	(J3-L)	(J3-L)	–	–	–	–	–	–	–	–
NC	905	(J26) AUX	–	–	–	DIAG MONI I/F-5 V	(J3-U)	(J3-U)	(J3-U)	(J3-U)	(J3-U)	(J3-U)	(J3-U)	(J3-U)	–	–	–	–	–	–	–	–
NC	906	(J25) AUX	–	–	–	DIAG MONI I/F-5 V	(J4-L)	(J4-L)	(J4-L)	(J4-L)	(J4-L)	(J4-L)	(J4-L)	(J4-L)	–	–	–	–	–	–	–	–
NC	907	(J24) AUX	–	–	–	DIAG MONI I/F-5 V	(J4-U)	(J4-U)	(J4-U)	(J4-U)	(J4-U)	(J4-U)	(J4-U)	(J4-U)	–	–	–	–	–	–	–	–
NC	908	(J23) AUX	–	–	–	DIAG MONI I/F-5 V	(J5-L)	(J5-L)	(J5-L)	(J5-L)	(J5-L)	(J5-L)	(J5-L)	(J5-L)	–	–	–	–	–	–	–	–
NC	909	(J22) AUX	–	–	–	DIAG MONI I/F-5 V	(J5-U)	(J5-U)	(J5-U)	(J5-U)	(J5-U)	(J5-U)	(J5-U)	(J5-U)	–	–	–	–	–	–	–	–
NC	90A	(J21) AUX	(J21) AUX	(J21) AUX	(J21) AUX	DIAG MONI I/F-5 V	(J6-L)	(J6-L)	(J6-L)	(J6-L)	(J6-L)	(J6-L)	(J6-L)	(J6-L)	–	–	–	–	–	–	–	–
NC	90B	–	–	–	–	DIAG MONI I/F-5 V	(J6-U)	(J6-U)	(J6-U)	(J6-U)	(J6-U)	(J6-U)	(J6-U)	(J6-U)	–	–	–	–	–	–	–	–
NC	90C	(J30)	–	–	–	DIAG MONI I/F-5 V	(J7-L)	(J7-L)	(J7-L)	(J7-L)	(J7-L)	(J7-L)	(J7-L)	(J7-L)	(J7-L)	(J7-L)	(J7-L)	–	–	–	–	–
NC	90D	(J31)	–	–	–	DIAG MONI I/F-5 V	(J7-U)	(J7-U)	(J7-U)	(J7-U)	(J7-U)	(J7-U)	(J7-U)	(J7-U)	(J7-U)	(J7-U)	(J7-U)	–	–	–	–	–
TH1	90E	(J32) TH1 FAN	(J32) TH1 TEMP	–	(J32) TH1 BIE	DIAG MONI I/F-5 V	(J8-L) 15 V	(J8-L) 11.5 V (HS)	(J8-L) 11.5 V	(J8-L) 5 V	(J8-L) 3.3 V	(J8-L) 3.3 V [0.8V]	(J8-L) -2.5 V	(J8-L) -2.5 V [H]	(J8-L) -5.5 V	(J8-L) -5.2 V	(J8-L) -8 V (HS)	(J8-L) -15 V	(J8-L)	(J32)	(J8-L)	(J40) CPAN 24 V
NC	90F	(J33)	(J33)	–	(J33)	DIAG MONI I/F-5 V	(J8-U)	(J8-U)	(J8-U)	(J8-U)	(J8-U)	(J8-U)	(J8-U)	(J8-U)	(J8-U)	(J8-U)	(J8-U)	(J8-U)	(J8-U)	(J33)	(J8-U)	(J40) CPAN 24 V
SHUTDOWN		E	E	E	E	E	P	P	P	P	P	P	P	P	P	P	P	P	P	P	P	P

When the shutdown result is "P": Turn the KEY switch off.

Other codes

100 to 108	Power-on sequence
700 to 706	Power-off sequence
010 to 07F	System monitor start diagnosis
08E	Digital switch setup error
08F	Waiting for Key switch to turn off
0EX	Fail detection

000 or 100	Waiting for key switch to be turned on
101	TC powered on
102	MF powered on (normal mode) and wait time for ready flag from the Engine
103	Wait time for ready flag from TC
104 to 108	Powered on
106 to 108	Maintenance mode power-on sequence (SW1, SW2) MF: Power on/off

3.11 Replacing IO IF

When replacing the IO IF, press the EMO (EMERGENCY OFF) switch to turn the main power off.

The monitor I/F ID, date and time, and system type settings are not required when replacing the IO IF since they are already set at the factory setting.

The setting procedures are provided as shown below as references. (Refer to Section 3.11.1 through Section 3.11.4.)

3.11.1 Using ROM Monitor Board

(1) ROM monitor startup procedure

□ Check 1: Make sure that the power to the system monitor is turned off. If not, press the EMO (EMERGENCY OFF) switch to turn the power off.

□ Check 2: Make sure that the VKT is connected to the serial port J9 on the TC6 IO IF board.

□ Check 3: Make sure that the console is turned on.

□ Check 4: Make sure that the console is set as shown below.

SPEED:	9600
Parity:	None
XON/OFF:	None
RTS/CTS:	Disabled

△ Operation 1: Turn the key switch on the AC CONT panel off.

△ Operation 2: Set MODE SELECT to 0xFE.

△ Operation 3: Press the START switch on the AC CONT panel.

□ Check 5: Make sure that the STATUS code on the AC CONT panel reads 0x0F0.

The ROM monitor startup procedure is now complete.

(2) Reset Method

△ Operation 1: Press the EMO (EMERGENCY OFF) switch to turn the power to the system monitor off.

△ Operation 2: Set MODE SELECT to 0x00.

△ Operation 3: Press the START switch on the AC CONT panel.

The system monitor is now turned on.

(3) Method for using commands

Note 1: Only uppercase letters can be used.

Note 2: Use the Del key to delete characters.

□ Check 1: Make sure that the console displays the message the one shown below.

ROM Monitor Mode rev xx.xx

xx/xx/xx xx:xx:xx ← Date and time at startup

Advantest ATE development section.

Hit any key to continue. ← Blinking

△ Operation 1: Press any key.

□ Check 2: Make sure that the prompt #>> appears on the VKT screen.

The system is now ready to accept commands.

3.11.2 Setting the Monitor I/F ID

(1) Setting the monitor I/F ID to NVRAM

△ Operation 1: Start the ROM monitor. (Refer to Section 3.11.1, “Using ROM Monitor Board.”)

△ Operation 2: Enter the command “SETMIFID.”

□ Check 1: Make sure that the VKT screen looks like the one shown below.

#>>SETMIFID	(1: Available, 0: N/A, E: Forcible exit)	
mid id set (1/0 or E)	AA:	Monitor I/F ID
id_AA (1/0) [B]	B:	Whether the monitor I/F is installed (information written in NVRAM)
	Note1:	***When you enter only the return key, the value in [ ] is set.***
	Note2:	***Always set all items including the monitor I/F ID.***
	Note3:	***When you finished making this setting, the ONLINE check starts automatically.***

(Example)

```
#>>SETMIFID
mif id set (1/0 or E)
id_ 01 (1/0) [1] 1
id_ 02 (1/0) [0] 0
id_ 03 (1/0) [1] 0
        :
        :
        :
        :
id_ 1D (1/0) [1] 0
id_ 1E (1/0) [1] 0
```

□ Check 2: Make sure that the VKT screen looks like the screen shown in ① below.

① When the input information and the information from the currently connected monitor I/F match.

“mif on line check pass”

② When the input information and the information from the currently connected monitor I/F do not match.

“mif on line check fail”

③ Data was set to 0 (MIN: 1 unit).

“mif id set error (mif is all 0)”

(2) Displaying the information set in NVRAM

△ Operation 1: Start the ROM monitor. (Refer to Section 3.11.1, “Using ROM Monitor Board.”)

△ Operation 2: Enter the command “READMIFID.”

```
#>>READMIFID
mif id read

[NVRAM] id read (Mi/f)
id_ 01 = 01  id_ 02 = 00  id_ 03 = 00  id_ 04 = 00  id_ 05 = 00 ◄── (01: Available; 00: N/A)
id_ 06 = 00  id_ 07 = 00  id_ 08 = 00  id_ 09 = 00  id_ 0A = 00
id_ 0B = 00  id_ 0C = 00  id_ 0D = 00  id_ 0E = 00  id_ 0F = 00
id_ 10 = 00  id_ 11 = 00  id_ 12 = 00  id_ 13 = 00  id_ 14 = 00
id_ 15 = 00  id_ 16 = 00  id_ 17 = 00  id_ 18 = 00  id_ 19 = 00
id_ 1A = 00  id_ 1B = 00  id_ 1C = 00  id_ 1D = 00  id_ 1E = 00
```

(3) Displaying the information on the currently connected monitor I/F

△ Operation 1: Start the ROM monitor. (Refer to Section 3.11.1, “Using ROM Monitor Board.”)

△ Operation 2: Enter the command “READMIFID.”

```
#>>READMIFID1
[ONLINE] id read (Mi/f)
mif_ id = 01 ◄──────────── Displays the ID of the currently connected monitor I/F only.
```

3.11.3 Setting Date and Time

(1) Method for setting a date

△ Operation 1: Start the ROM monitor. (Refer to Section 3.11.1, “Using ROM Monitor Board.”)

△ Operation 2: Enter the command “DATE.”

date of now: (94/12/17) ← Displays the current date.
input date -> YY/MM/DD ← Enter the new value you want to set.
YY: Calendar year (2 low-order digits)
MM: Month
DD: Day

Note: When you enter only press the return, the changes you've set are not executed.

(2) Method for setting time

△ Operation 1: Start the ROM monitor. (Refer to Section 3.11.1, “Using ROM Monitor Board.”)

△ Operation 2: Enter the command “TIME.”

time of now: (13:29:13) ← Displays the current time.
input date -> HH/MM/SS ← Enter the new value you want to set.
HH: Hours (24-hour system)
MM: Minutes
SD: Seconds

Note: When you enter only press the return, the changes you've set are not executed.

3.11.4 Setting the System Type

(1) Method for setting the system type in NVRAM

△ Operation 1: Start the ROM monitor. (Refer to Section 3.11.1, “Using ROM Monitor Board.”)

△ Operation 2: Enter the command “SETSYSTEM.”

□ Check 1: Check to see that the console looks like the one shown below.

```
# >> SETSYSTEM
            1:  T6681
            2:  OTHER
      Select NO:
```

△ Operation 3: Enter “2” for Select No and choose “OTHER” for the system type.

□ Check 2: Check to see that the console looks like the one shown below.

```
      Select No. 2
      THIS SYSTEM IS OTHER
# >>
```

(2) Method for verifying the system type

△ Operation 1: Press the EMO (EMERGENCY OFF) switch to turn the power to the system monitor off.

△ Operation 2: Set MODE SELECT to 0x00.

△ Operation 3: Turn the key switch off.

△ Operation 4: Press the START switch on the AC CONT panel.

△ Operation 5: Set MODE SELECT to 0xD3 and press the DIAG switch.

□ Check 1: Check to see if the LED indicator on the AC CONT displays “0x999.” If the status is not “0x999,” a TC power supply error results when you turn the key switch on. If this happens, set the system type again.

(3) Method of resetting

△ Operation 1: Set MODE SELECT to 0x00.

Thus, the system is ready to accept your instruction to turn the key switch on.

4. LED SPECIFICATIONS

The diagram below shows specifications of each LED on the LED-fitted board.

4.1 Specifications of the TC6/TC7 Unit LEDs

Table 4-1 Specifications of the TC6 Unit LEDs

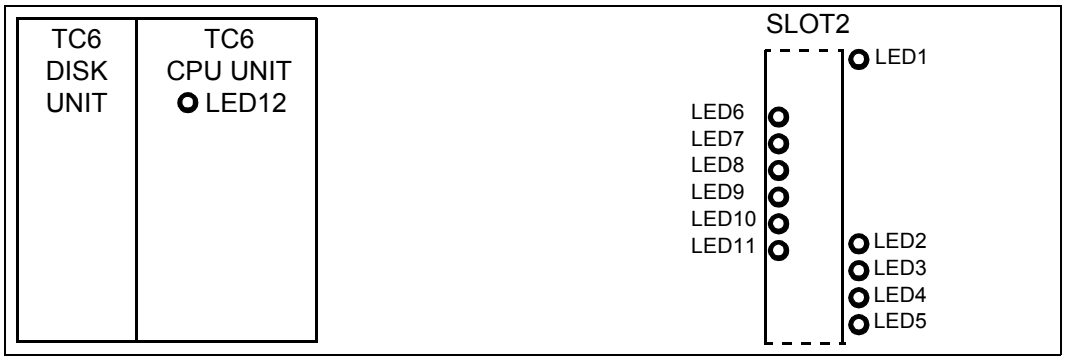

Table 4-2 Specifications of the TC7 Unit LEDs

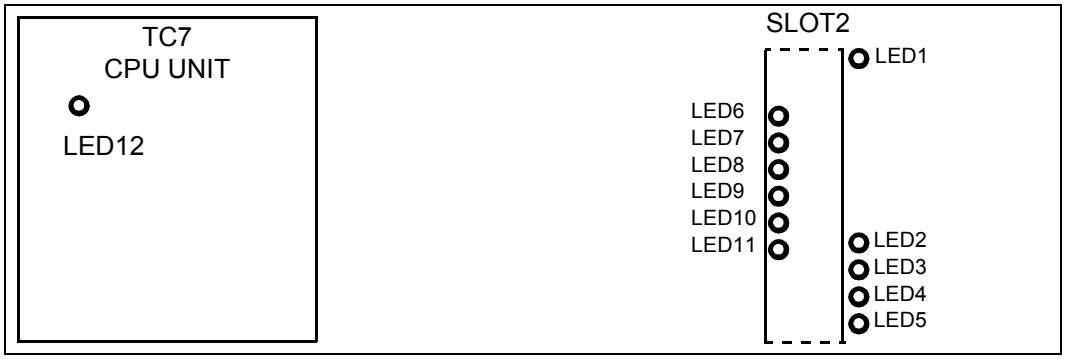

4.1 Specifications of the TC6/TC7 Unit LEDs

SLOT No.	Circuit Name	LED No.	Color	Display Description
2	TC6 IO IF board	LED1	Green	Lit when SYSMON is turned ON.
		LED2	Green	Lit when the FiFo READ cycle is active.
		LED3 LED4 LED5	Green Green Green	[D13, D14, and D15] indicate the DATA row number accumulated on the FiFo.
	TC6 IO OPTION IF board	LED6	Green	Lit when EXT Ach is Busy.
		LED7	Green	Lit when EXT Bch is Busy.
		LED8 LED9 LED10 LED11	Green Green Green Green	Not used
	TC6/TC7 CPU unit	LED12	Green	Lit after the CPU is started.

4.2 Specifications of the DP Unit LEDs

Table 4-3 Specifications of the DP Unit LEDs

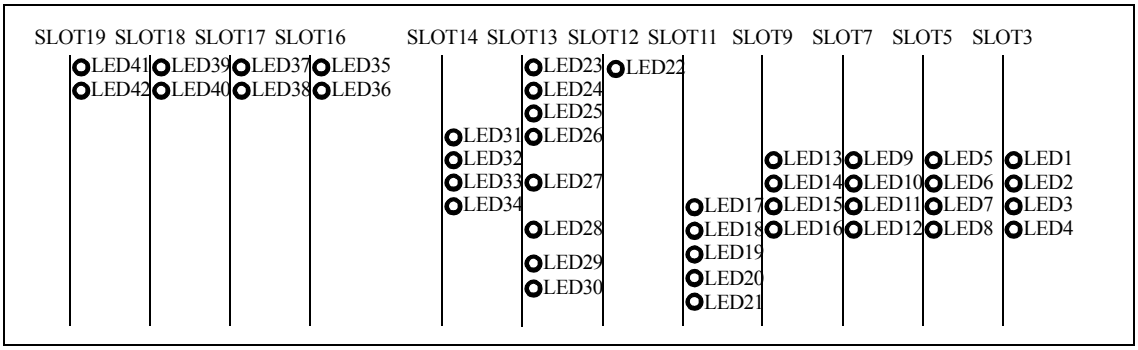

SLOT No.	Circuit Name	LED No.	Color	Description
3, 5, 7, 9	DPS-CONT	1, 5, 9,13	Green	Lit when the oscillation, guard or Kelvin alarm occurs.
		2, 6, 10,14	Green	Lit when the clamp alarm occurs.
		3, 7, 11,15	Green	Lit when the DSP is in RON.
		4, 8, 12,16	Green	Lit when the DSP is under A/D conversion.
11	40 V PPS	17	Red	Lit when the head sink alarm occurs.
		18	Yellow	Lit when the clamp alarm occurs.
		19	Green	Lit while the FPGA is being configured.
		20	Yellow	Lit when the total alarm occurs.
		21	Green	Lit while the FPGA is busy.
12	DPS MUX	22	Green	Lit when the +5 V Power is turned ON.
13	IF	23	Orange	Turns OFF when the configuration has been completed.
		24	Green	Not applicable.
		25	Green	Not applicable.
		26	Green	Not applicable.
		27	Orange	Lit when the DSP clamp alarm occurs.
		28	Red	Lit when the heat sink alarm occurs.
		29	Green	Lit when -5.2 V power supply is turned on.
		30	Green	Lit when +5 V power supply is turned on.
14	UDC-CONT	31	Green	Lit when the clamp alarm occurs.
		32	Green	Lit when the guard alarm occurs.
		33	Green	Lit when the DC is under A/D conversion.
		34	Green	Lit when the DC is in RON.
16, 17, 18, 19	MDC	35, 37, 39, 41	Orange	Lit when the clamp alarm occurs.
		36, 38, 40, 42	Orange	Lit when the guard alarm occurs.

4.3 Specifications of the Monitor I/F LEDs

Table 4-4 Specifications of the Monitor I/F LEDs (TC6)

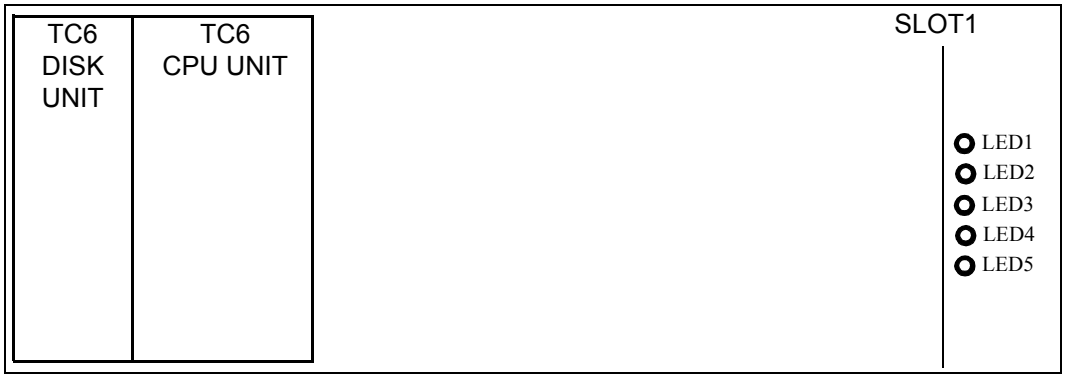

Table 4-5 Specifications of the Monitor I/F LEDs (TC7)

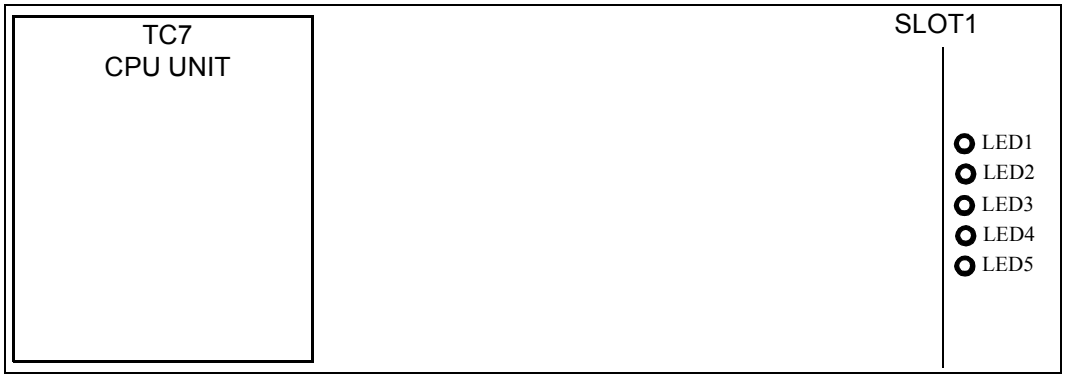

SLOT No.	Circuit Name	LED No.	Color	Description
1	MONITOR I/F	1	Green	Lit when +5 V(SYS) power supply is turned on.
		2	Green	Lit when -5.2 V(SYS) power supply is turned on.
		3	Green	Lit when +5 V(TC) power supply is turned on.
		4	Green	Lit when +5 V power supply is turned on.
		5	Green	Lit when +24 V power supply is turned on.

5. BOARD REPLACEMENT

5.1 How to Read the Cable Marker

All cables in the tester unit of this test system have cable markers attached. The cable marker has a tag indicating where each cable should be connected.

In the example below, the cable marker reads “SQPG S2, J6.” This means that the cable should be connected to connector No. 6 in slot 2 of the PG unit.

For details about unit names, slots, and connector numbers, refer to each cable connection diagram.

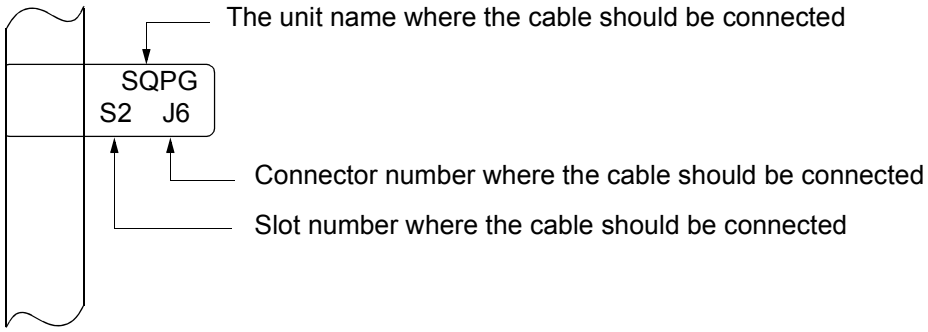

How to read the cable marker

5.2 Detaching/Attaching Boards Mounted Inside the Frame

Detachable handles, shown in Figure 5-1 are located at the top and bottom of the frame. To detach or attach a board, position the board handles so that the small slot fit over the knobs on the outside of the board frame.

When inserting the board, push the board in with your hand until the connector guide of the back board and the board are engaged.

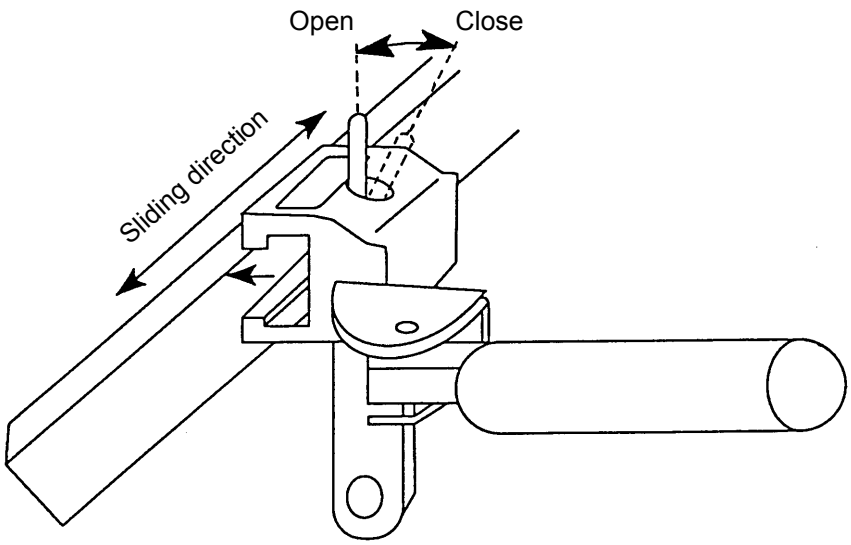

Figure 5-1 Board Handle (KH9-90287)

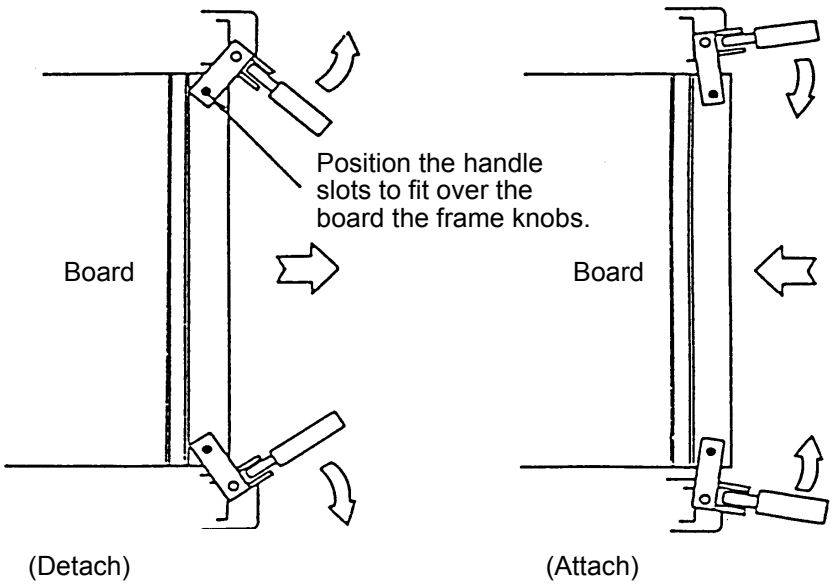

Figure 5-2 Detaching and Attaching the Board

5.3 Detaching/Attaching the Boards Mounted in the Test Head

5.3.1 Detaching/Attaching the Mounted Board

To detach or attach a board from the test head, use the jig provided (shown in Figure 5-3).

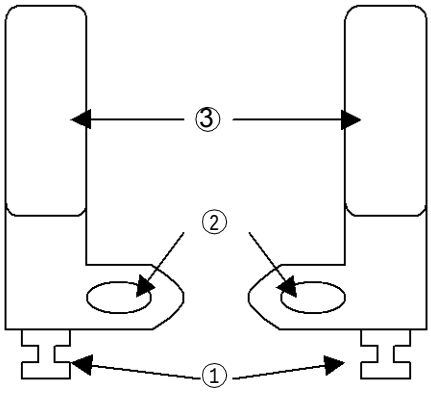

Figure 5-3 Test Head Board Handle

To remove the pin electronics card, insert ① the pulling jig into the rail, place ② on the pin at the top of the pin electronics card, then grasp ③ and push outward.

To insert the pin electronics card, grasp ③ and pull inward.

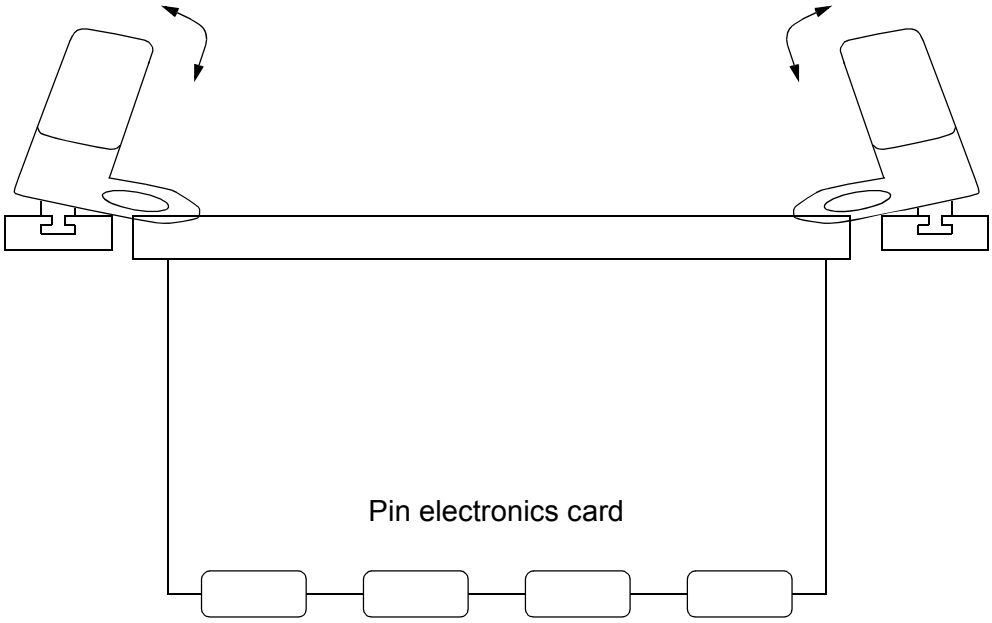

Figure 5-4 Detaching/Attaching Test Head Board

5.4 Procedure for Replacing the Pin Electronics Card (PE)

Use the following procedure to replace pin electronics cards. Be extremely careful with pin electronics cards which are precision products.

(1) Press button ① in Figure 5-5 to let the performance board free, then remove the performance board.

(2) Press the MB FREE button (button ② in Figure 5-5) to let the HIFIX free.

(3) Unscrew the four screws on the outer panel of the HIFIX, then remove the outer panel.

(4) Remove the air hose connected to ③ in Figure 5-5 using shown in Figure 5-6. (Note 1)

Note1: Use the appropriate procedure to remove the air hoses, or they may be damaged.

(5) Hold the handles and the levers ④ in Figure 5-5 and remove the HIFIX. (Note 2)

Note2: Since the HIFIX is heavy, make sure two people remove it.
Connect or disconnect the HIFIX in a horizontal position, since it is positioned precisely using guide pins.

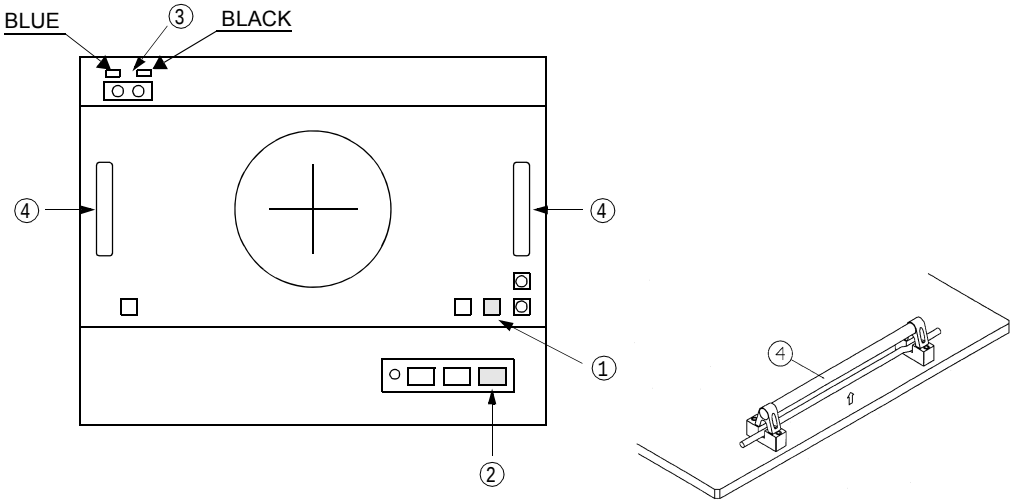

Figure 5-5 TH (1)

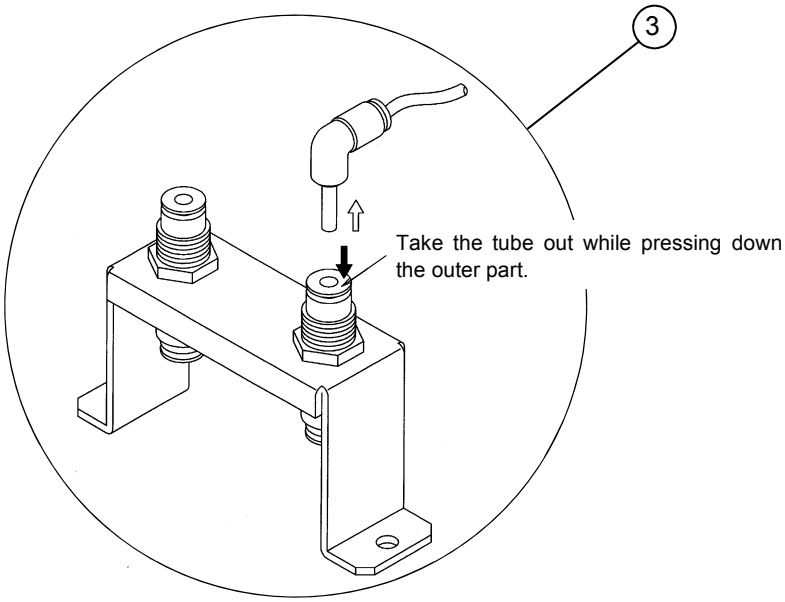

Figure 5-6 How to Take Out the Tube

(6) Extract the PE using the jig provided shown in Figure 5-3 (Note3)

Note3: Always be sure to wear a earth clip when replacing the PE.

(7) To assemble, reverse the sequence of steps (1) through (6). Check to see that the PE is firmly inserted. (Note4)

Note4: When inserting PEs, hold them securely with your hands until they are completely pushed in. Otherwise they may drop due to their weights.
Be careful not to catch your finger between the board and the support bar.
Use an air hose of the specified color.

5.5 Procedure for Replacing the Test Head Board Power Supply

(1) Press button ① in Figure 5-5 to let the performance board free, then remove the performance board.

(2) Press the MB FREE button (button ② in Figure 5-5) to let the HIFIX free.

(3) Unscrew the four screws on the outer panel of the HIFIX, then remove the outer panel.

(4) Remove the air hose connected to ③ in Figure 5-5 using shown in Figure 5-6. (Note1)

Note1: Use the appropriate procedure to remove the air hoses, or they may be damaged.

(5) Hold the handles ④ in Figure 5-5 and remove the HIFIX. (Note2)

Note2: Since the HIFIX is heavy, make sure two people remove it.
Connect or disconnect the HIFIX in a horizontal position, since it is positioned precisely using guide pins.

(6) Use the procedure below to remove a cylinder from each side of the Test Head (as a result, two cylinders must be removed from both sides of the Test Head).

- Remove two M8 hexagon socket screws from each side.
- Remove two air tubes (one blue tube and one black tube).

Note3: Remove the tubes as shown in the diagram, or the nipples may be damaged.

(7) Disconnect the cables from the board power supply.

(8) Use the jig to remove the Test Head board power supply.

Note4: Always use the included grounding wrist band when replacing the Test Head board power supply.

(9) Perform Steps (1) thru (8) in reverse order to install the Test Head board power supply, and confirm that it has been inserted correctly.

Note5: Hold the board power supply securely to prevent it from falling during the installation. In addition, connect the air hoses using their colors as a guide.

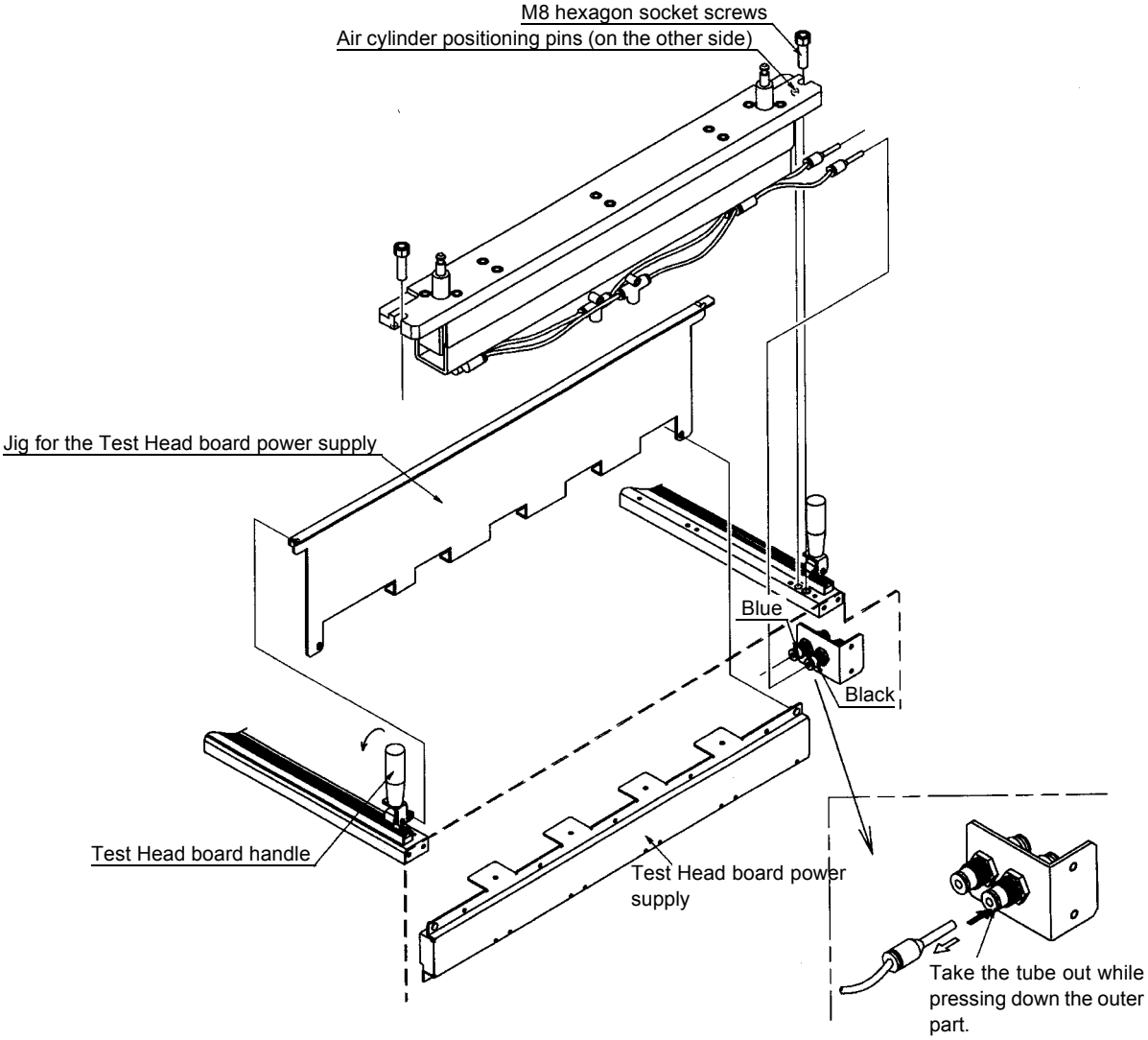

Figure 5-7 Procedure for Replacing the Test Head Board Power Supply

5.6 Precautions to Be Taken when Carrying Boards

Always be sure to use the rack provided when transporting the circuit boards listed below.

Name	Trunk Case Type
Pin electronics card	H9-91631
Board power supply	H9-91632

5.7 Operation when Replacing Boards

(1) Before replacing the monitor I/F, press the EMO (EMERGENCY OFF) switch to turn the main power supply off.

(2) Make sure the fan has stopped before you remove or insert a connector or board.

(3) After replacing the board, change the board's revision setting.

The following shows how to change the configuration data.

The underlined part denotes a string to be entered from the keyboard.

① Log in to Engine as a general user.

② Move the directory to $ADVANTEST_HOME/data/host/<host>/sys_data.

```
% cd $ADVANTEST_HOME/data/host/<host>/sys_data
```

③ Copy the revision number setup file of the board before creating a backup. This helps to prevent the data from an operational mistake, power outage, or unexpected damage.

```
% cp atd boarddatn.db atd boarddatn.db.BAK
```

④ Start the boardrev program. Then choose menu "3."

```
% boardrev
  ----------------------------------------------------------------

          T6575 Board Revision Program Rev0.1

         Database File                     Working File
      +------------------+  --- 1--->  +----------------+
      | atd_boarddatn.db |             | at_boardch.dat |
      +------------------+  <---2 ---  +----------------+

  1. extract working file from database file
  2. recreate database file from working file
  3. 1 + 2 (using editor)
  4. 1 + 2 (interactive operation)
  q. quit from menu

  Please input a number that selected from the menu: 3
```

⑤ The vi editor starts and when the board REVISION data (before any corrections) appears, make the necessary changes.

```
<UNIT>     <SLOT>     <BOARD>        <FUNCTION>     <REV>     <SER>
[TOP]-------------------------------------------------------------
DPU1       DMM        R6581T         DMM            -         -
DPU1       3          BGR-024897     DPS_CONT       -         -
DPU1       4          BGR-023715¥02  DPS1           -         -
DPU1       5          BGR-024897     DPS_CONT       -         -
DPU1       6          BGR-023715×02  DPS2           -         -
DPU1       7          BGR-024897     DPS_CONT       -         -
DPU1       8          BGR-023715×02  DPS3           -         -
DPU1       9          BGR-024897     DPS_CONT       -         -
DPU1       10         BGR-023715×02  DPS4           -         -
DPU1       12         BGR-024899     IFL            -         -
DPU1       13         BGR-023709     IFA            -         -
...
...
[EOF]-------------------------------------------------------------
```

In the following explanation, the word “row” refers to a horizontal list and the word “column” refers to a vertical list. <UNIT>, <SLOT>, etc. in the first row are not displayed. Rows [TOP]--- and [EOF]--- are not displayed either.
The <REV> column lists the previous revision numbers. The <SER> column lists the previous serial Nos. Change the data in the <REV> and <SER> columns only, and no other data. Rows that contain data you do not change can be deleted. For details on how to use the vi editor, refer to the manual included with your vi editor.

Here, it is assumed that you have corrected the data as follows.

```
[TOP]-------------------------------------------------------
DPU1       7          BGR-024897     DPS_CONT     ABC     3150
DPU1       9          BGR-024899     IFL          ABD     3420
[EOF]-------------------------------------------------------
```

Save the contents you’ve corrected and exit the editor.

⑥ When you are back at the boardrev menu, choose “y” to have the corrections to board revision numbers reflected in the file. When you are back at the menu again after the corrections are reflected, choose “q” to quit the menu.

```
create new board.db? [y or n]:y

DPU1        7           BGR-024897     DPS_CONT       ABC      3150
DPU1        9           BGR-024899      IFL           ABD      3420
  ---------------------------------------------------------------------

        T6575 Board Revision Program Rev0.1

       Database File                      Working File
    +------------------+ --- 1--->  +----------------+
    | atd_boarddatn.db |            | at_boardch.dat |
    +------------------+ <---2 ---  +----------------+

1. extract working file from database file
2. recreate database file from working file
3. 1 + 2 (using editor)
4. 1 + 2 (interactive operation)
q. quit from menu

Please input a number that selected from the menu:q

%
```

⑦ Delete the previous file.

```
% rm atd boarddatn.db.BAK
%
```

When replacing the board, back up the configuration data by using the following procedures.

(a) Saving the backup copy on a floppy disk (TC6-equipped system)

① Move the directory to $ADVANTEST_HOME/data/host/<host>/sys_data.

```
% cd $ADVANTEST HOME/data/host/<host>/sys data
```

② Change to the root directory.

```
% su
Password:_______
#
```

③ Check that hwconfig.dat, atd_boarddatn.db exists in the file.

```
# ls hwconfig.dat atd boarddatn.db
```

④ Insert a floppy disk into the drive.

⑤ Enter the volcheck command.

```
# volcheck
```

⑥ Use the tar command to save the configuration data to the floppy disk.

```
# tar cvf /vol/dev/aliases/floppy0 hwconfig.dat atd boarddatn.db
```

⑦ Enter the eject command.

```
# eject
```

⑧ Remove the floppy disk from the drive.

(b) Saving the backup copy on a CD-RW (TC7-equipped system)

① Move the directory to $ADVANTEST_HOME/data/host/<host>/sys_data.

```
% cd $ADVANTEST_HOME/data/host/<host>/sys_data
```

② Change to the root directory. The following procedure must be performed as the root user.

```
% su
Password:___________
#
```

③ Check that hwconfig.dat, atd_boarddatn.db exists in the file.

```
# ls hwconfig.dat atd_boarddatn.db
```

④ Insert the CD-RW in the drive.

⑤ Enter the following command to delete the data on the CD-RW.
If the cdrom file manager starts, quit the file manager.

```
# cdrw -b session
```

⑥ If the data on the CD-RW is deleted and the CD-RW is ejected from the drive, re-insert the CD-RW.

⑦ Change the directory to the home directory.

```
# cd
```

⑧ To save the backup copy, enter the following command.

```
# $ADVANTEST_HOME/bin/sys_data_back
```

⑨ If the process complete, the CD-RW is ejected from the drive. Remove the CD-RW and press the eject button on the drive to close the disk tray.

5.8 Removing the TC6 CPU UNIT

① Turn OFF the system power switch. (Also, turn OFF the main breaker.)

② Remove the four TC6 CPU UNIT supplied cables from the DISK UNIT side.

③ Remove DCB-MM10405X02A from the CPU UNIT and DISK UNIT side.

④ Remove DCB-MM10517X01A from the CPU UNIT side.

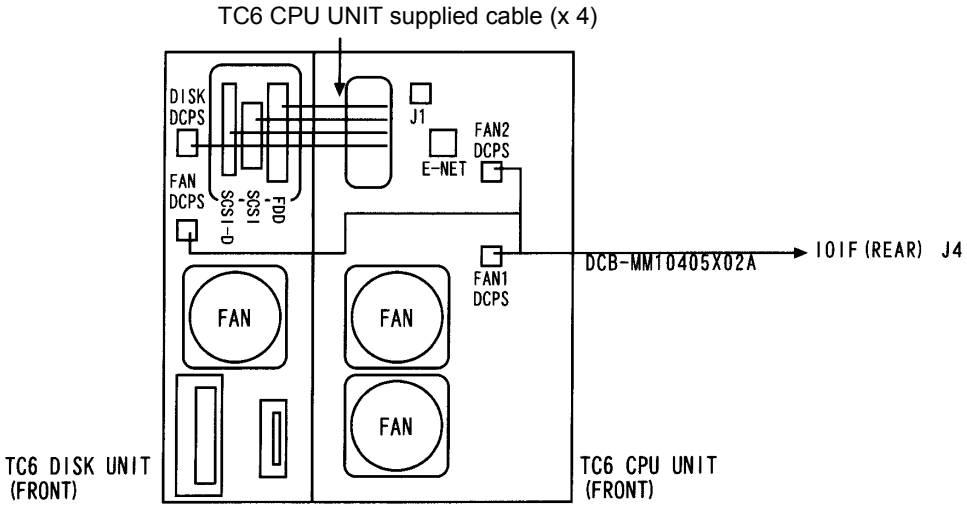

TC6 CPU UNIT and DISK UNIT Front View

⑤ Remove the MF (left) side panel and (upper) internal cover.

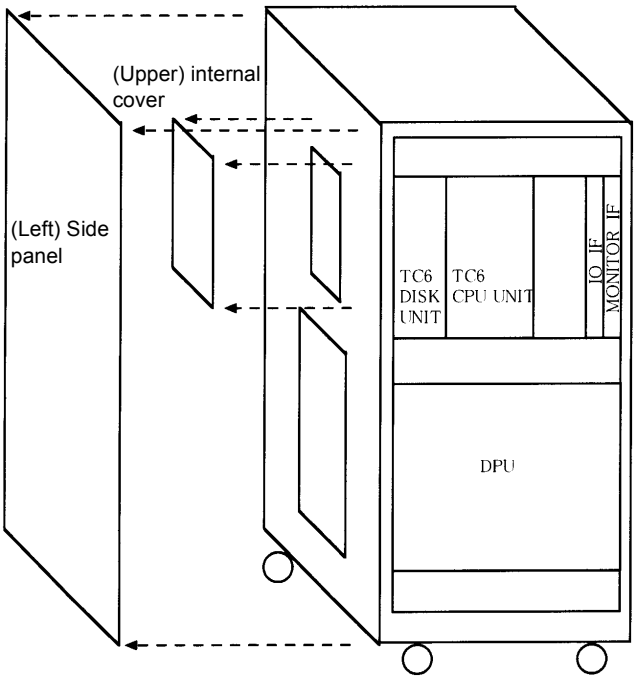

MF Side Panel and Internal Cover Removal

⑥ Remove the four screws which secure the DMM and pull out the DMM 10 cm away from the REAR panel.

⑦ Remove the four screws which secure the TC6 CPU UNIT and pull out the TC6 CPU UNIT 10 cm away from the FRONT panel.

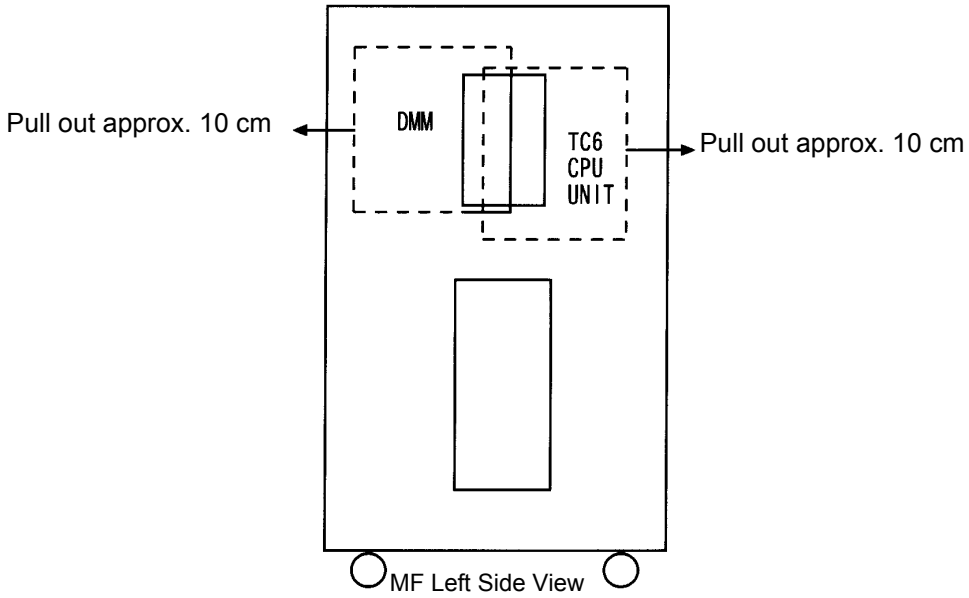

⑧ Remove the KB conversion BOX supplied cable, MONITOR cable, DCB-SSE208X01, and the power cable, which are connected to the TC6 CPU UNIT REAR side, from the through hole on the upper left side of the MF.

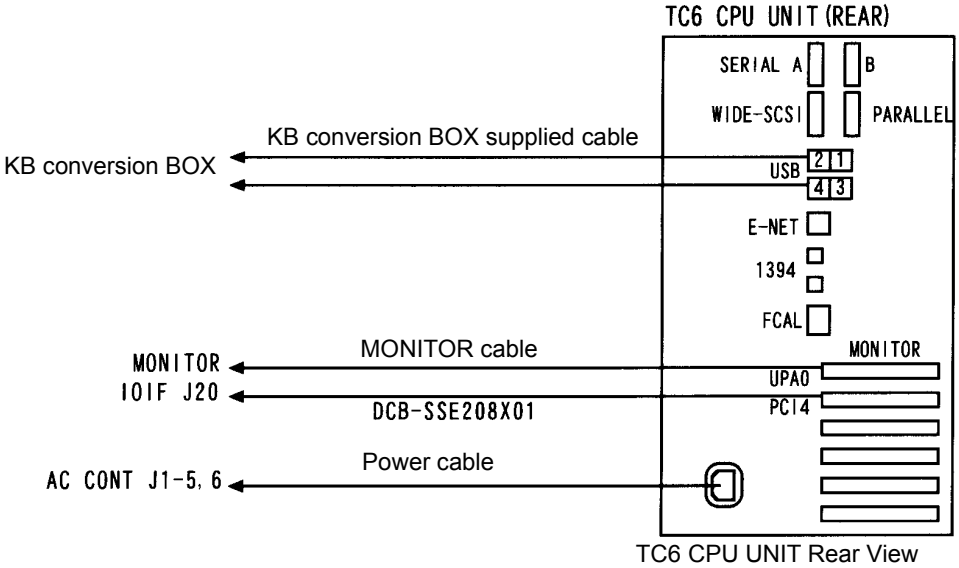

⑨ Remove the TC6 CPU UNIT from the MF (two persons are required).

5.9 Removing the TC7 CPU UNIT

① Turn OFF the system power switch. (Also, turn OFF the main breaker.)

② Disconnect the KB Conversion BOX cables, MONITOR cable, TC supplied monitor conversion cable, DCB-SSE208X01, and DCB-MM10405X02A from the TC7 CPU UNIT front side.

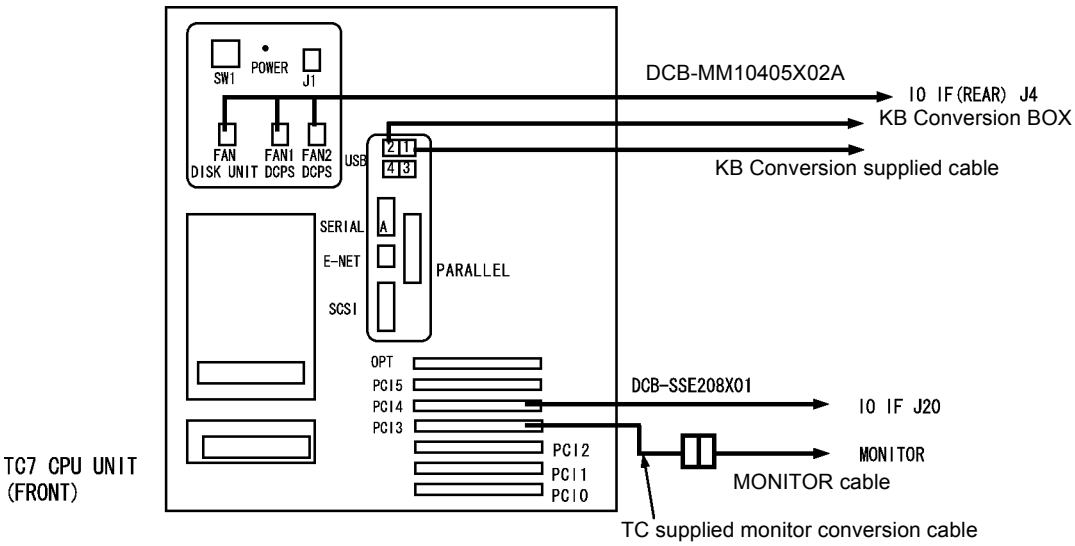

③ Remove the MF (left) side panel and (upper) internal cover.

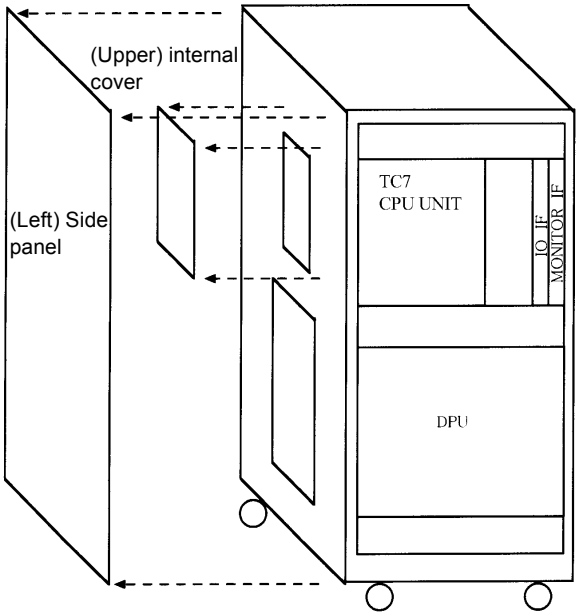

MF Side Panel and Internal Cover Removal

④ Remove the four screws which secure the DMM and pull out the DMM 10 cm away from the REAR panel.

⑤ Remove the eight screws which secure the TC7 CPU UNIT and pull out the TC7 CPU UNIT 10 cm away from the FRONT panel.

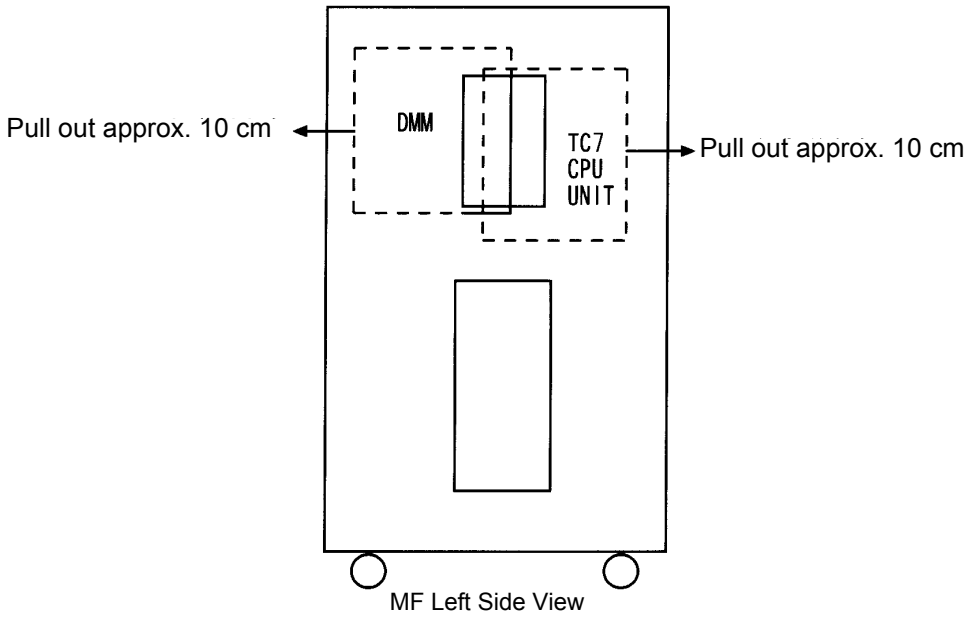

⑥ Remove the power cable, which are connected to the TC7 CPU UNIT REAR side, from the through hole on the upper left side of the MF.

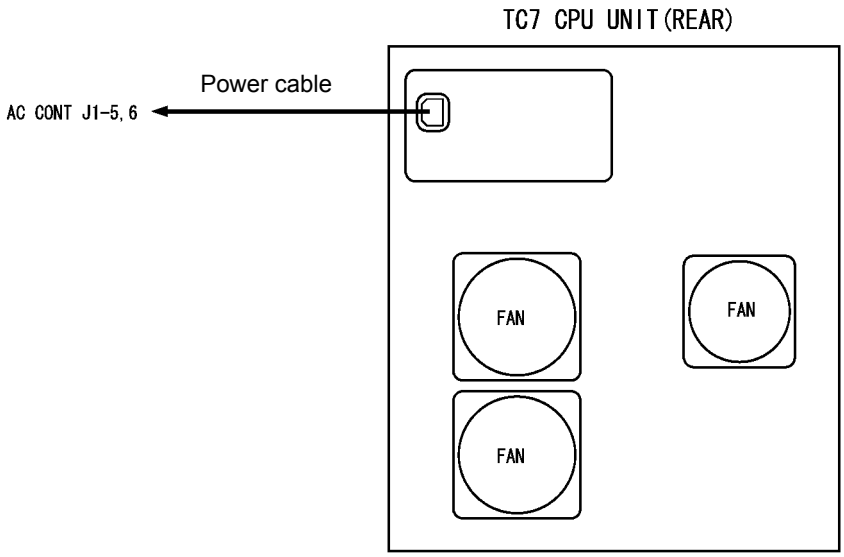

⑦ Remove the TC7 CPU UNIT from the MF (two persons are required).

6. UNIT, POWER SUPPLY LAYOUT, AND VOLTAGE SPECIFICATION

6.1 System Layout

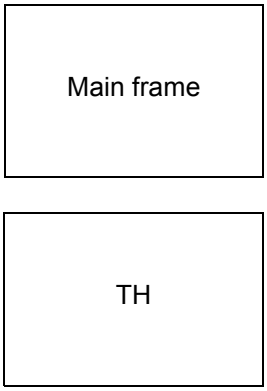

Figure 6-1 System Layout

6.2 Main Frame Inside Layout

MF FRONT VIEW (TC6)

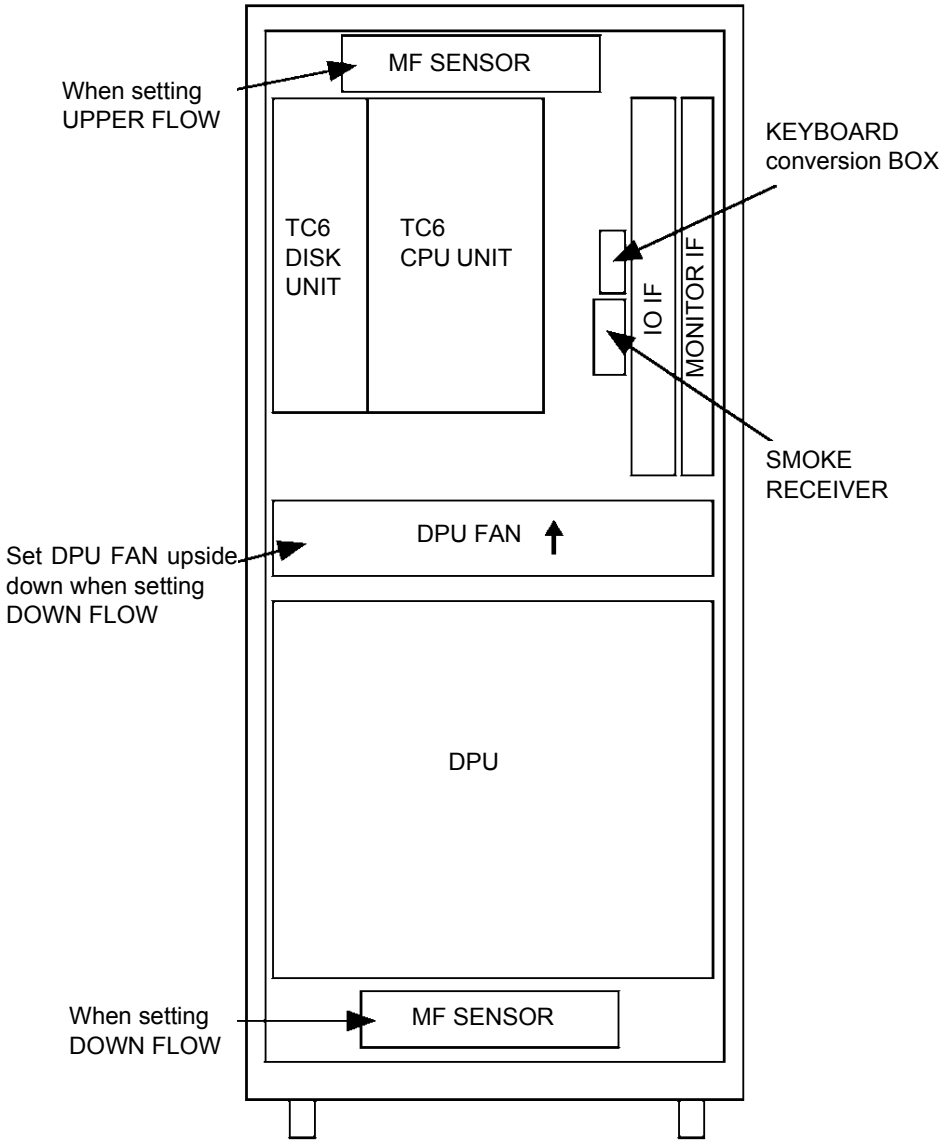

Figure 6-2 TC6 Main Frame Layout (Front View)

MF FRONT VIEW (TC7)

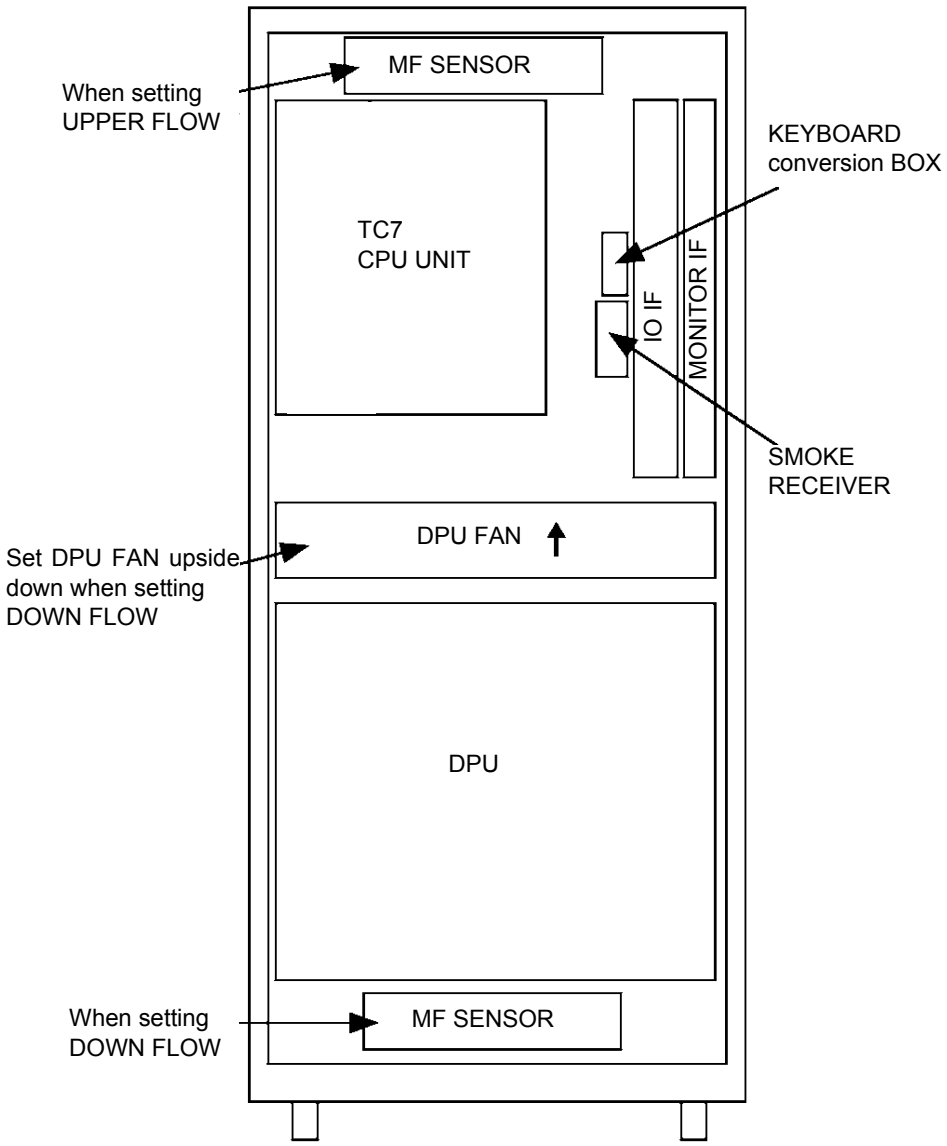

Figure 6-3 TC7 Main Frame Layout (Front View)

MF REAR VIEW

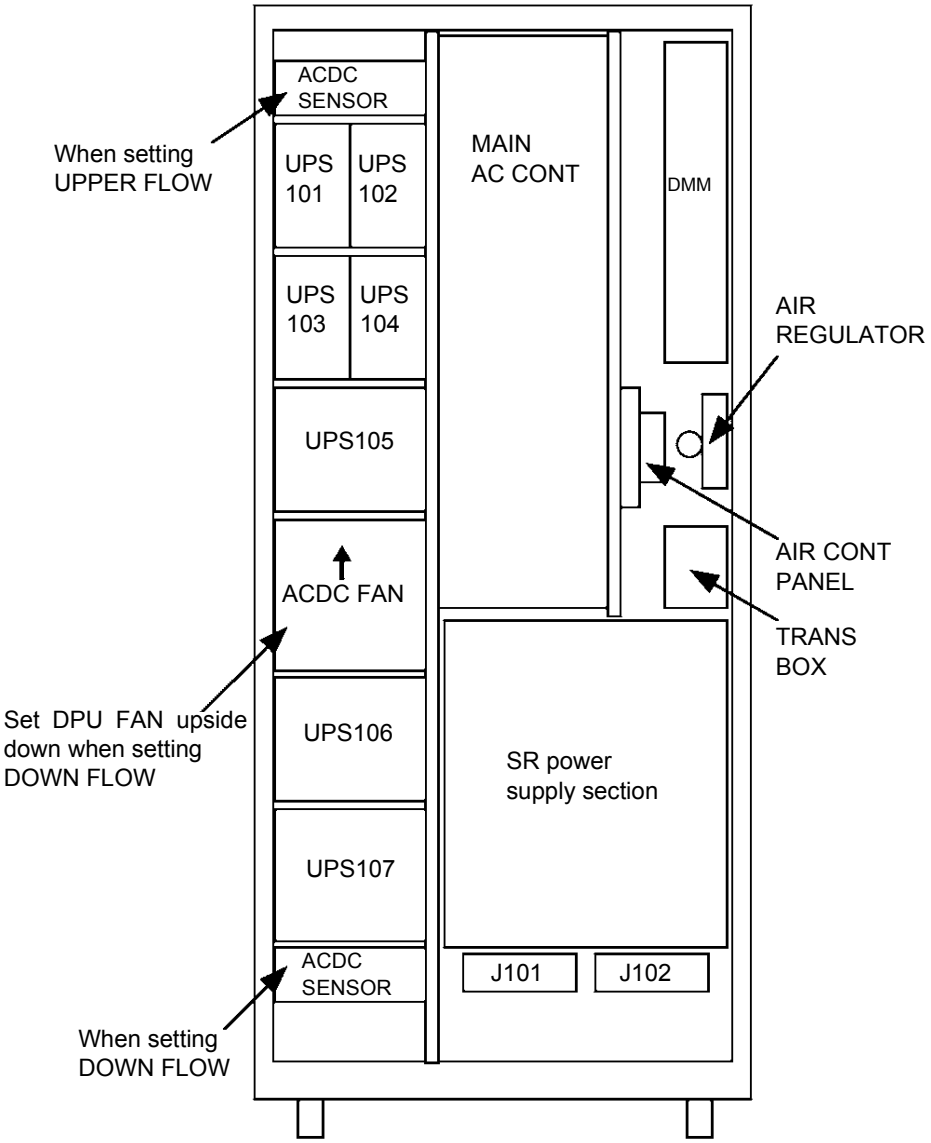

Figure 6-4 Arrangement Inside the Main Frame (REAR VIEW)

MF REAR VIEW

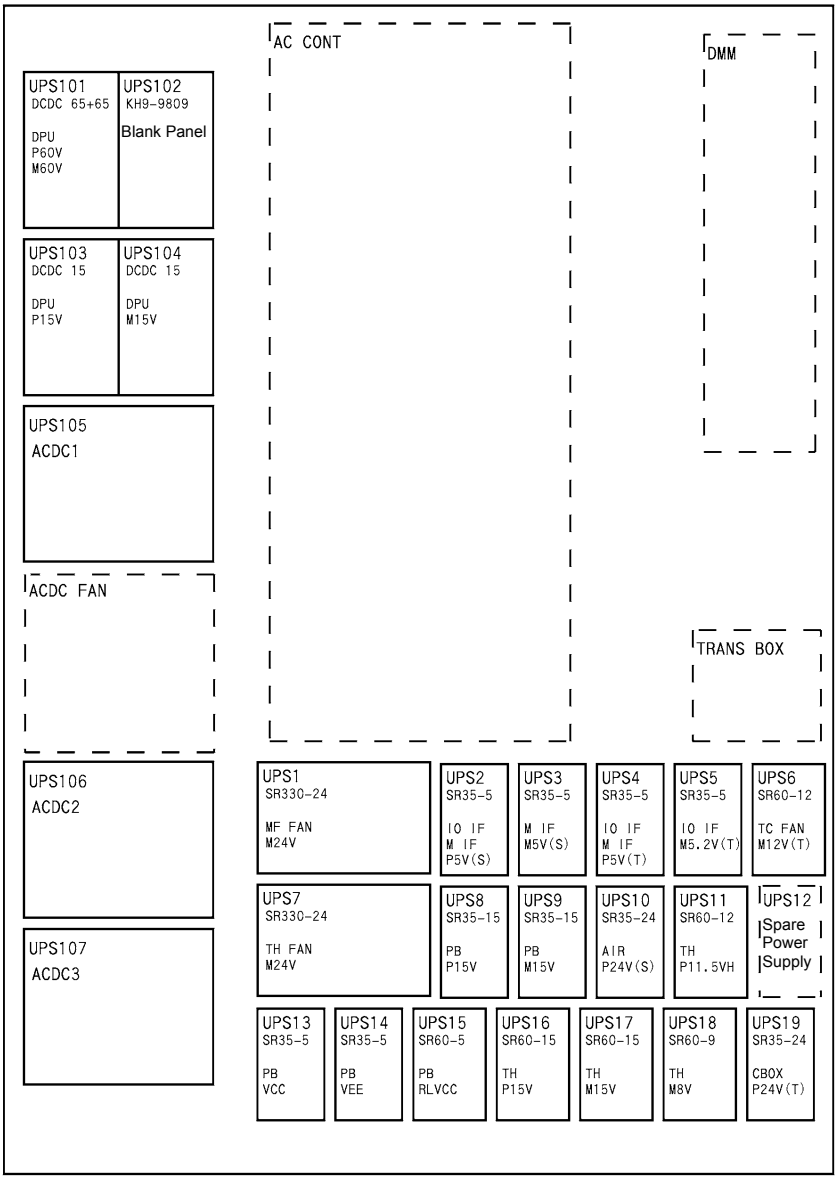

Figure 6-5 Main Frame Power Supply Layout

6.3 Safety Device Mounting Position

MF FRONT VIEW (TC6)

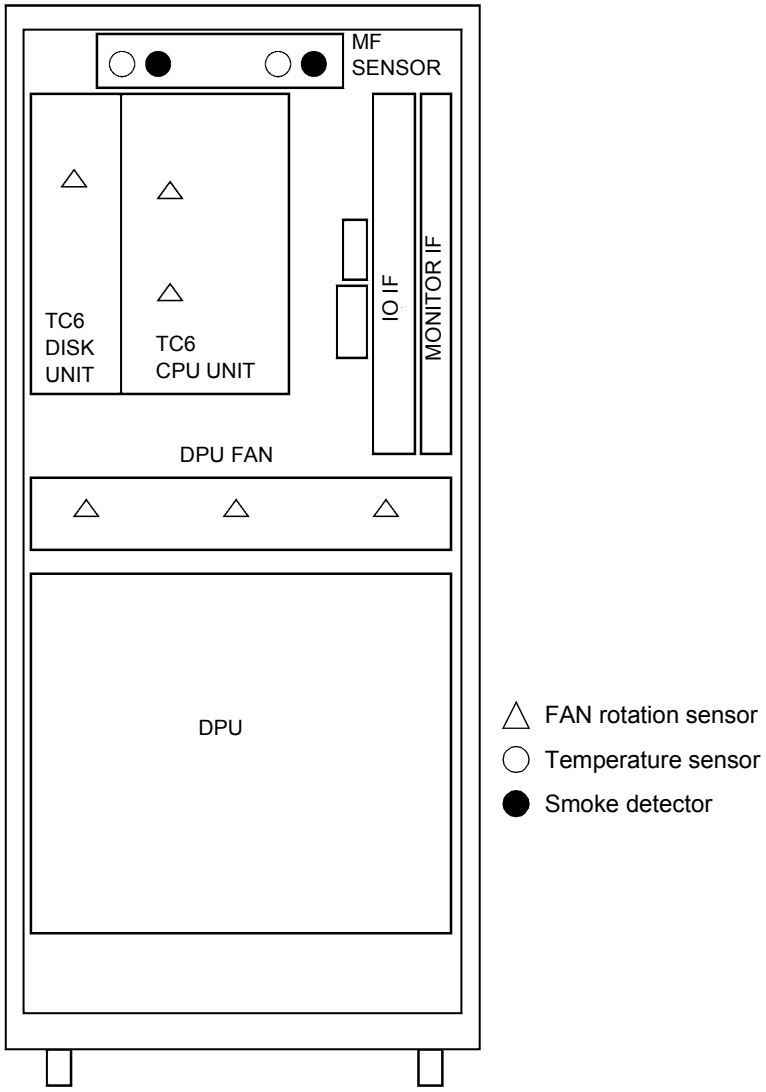

Figure 6-6 TC6 MF Safety Device Mounting Position (Front View when Setting UP FLOW)

MF FRONT VIEW (TC7)

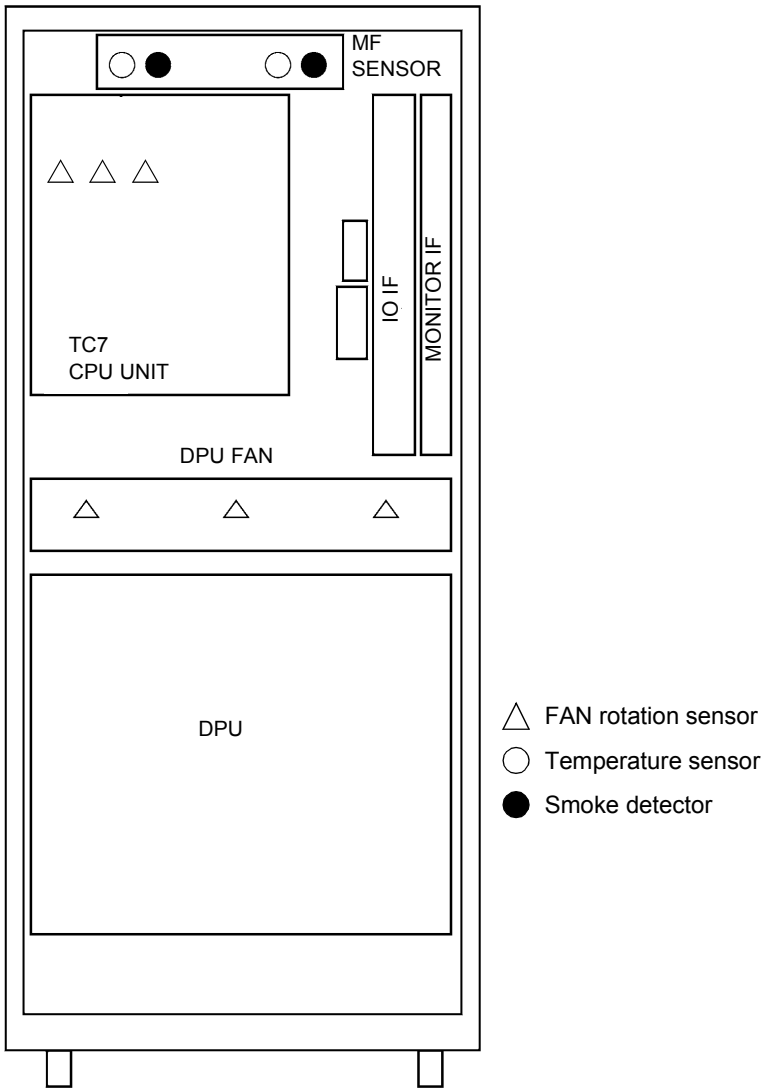

Figure 6-7 TC7 MF Safety Device Mounting Position (Front View when Setting UP FLOW)

MF REAR VIEW

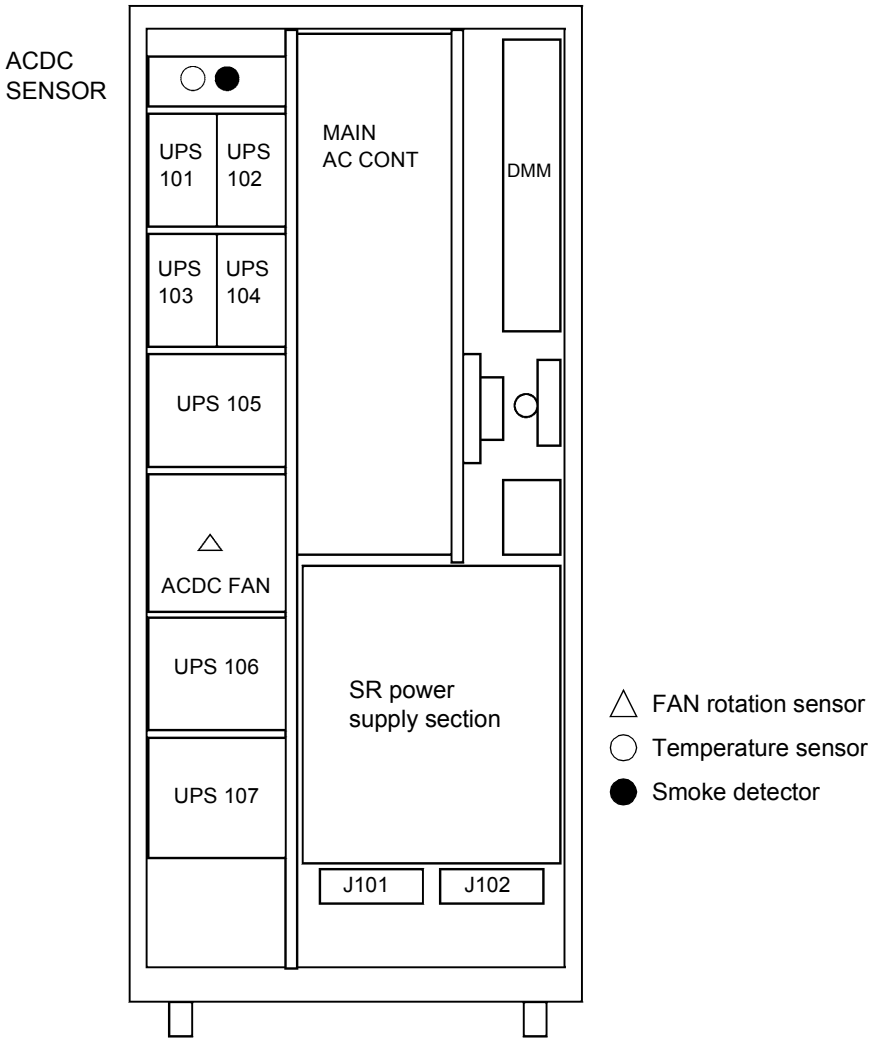

Figure 6-8 MF Safety Device Mounting Position (Rear View when Setting UP FLOW)

MF FRONT VIEW (TC6)

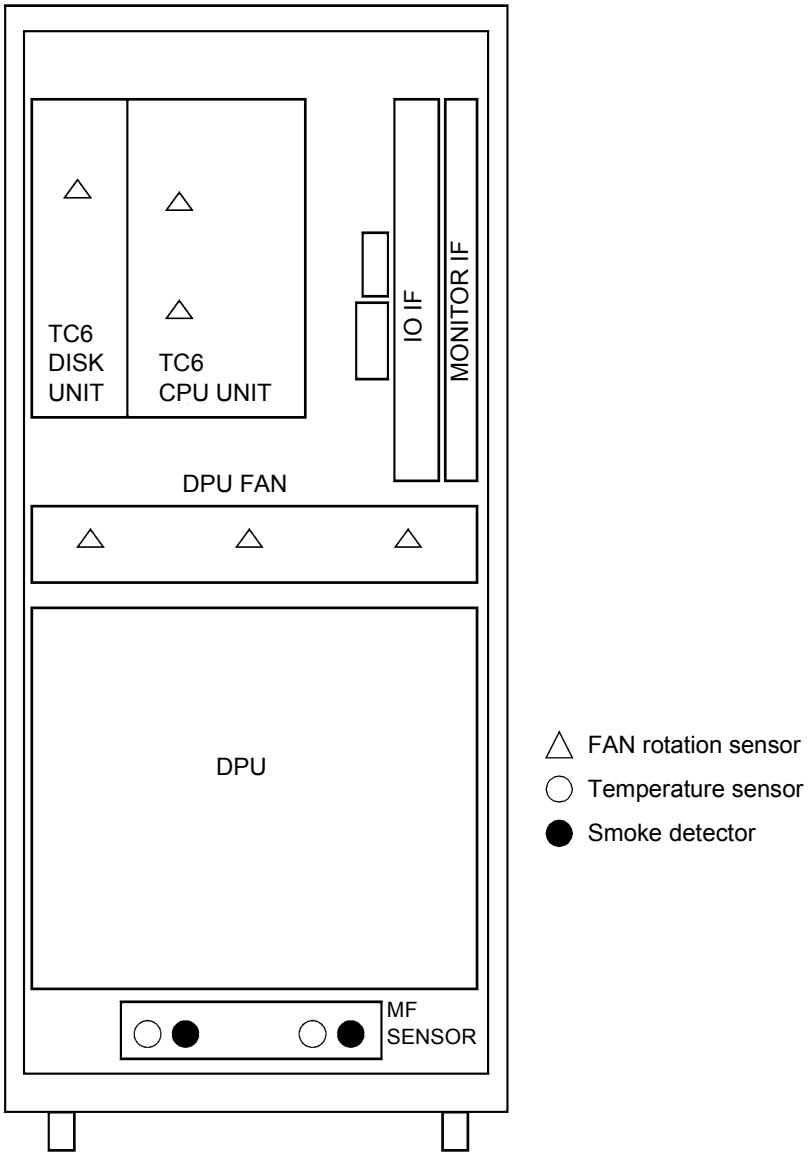

Figure 6-9 TC6 MF Safety Device Mounting Position (Front View when Setting DOWN FLOW)

MF FRONT VIEW (TC7)

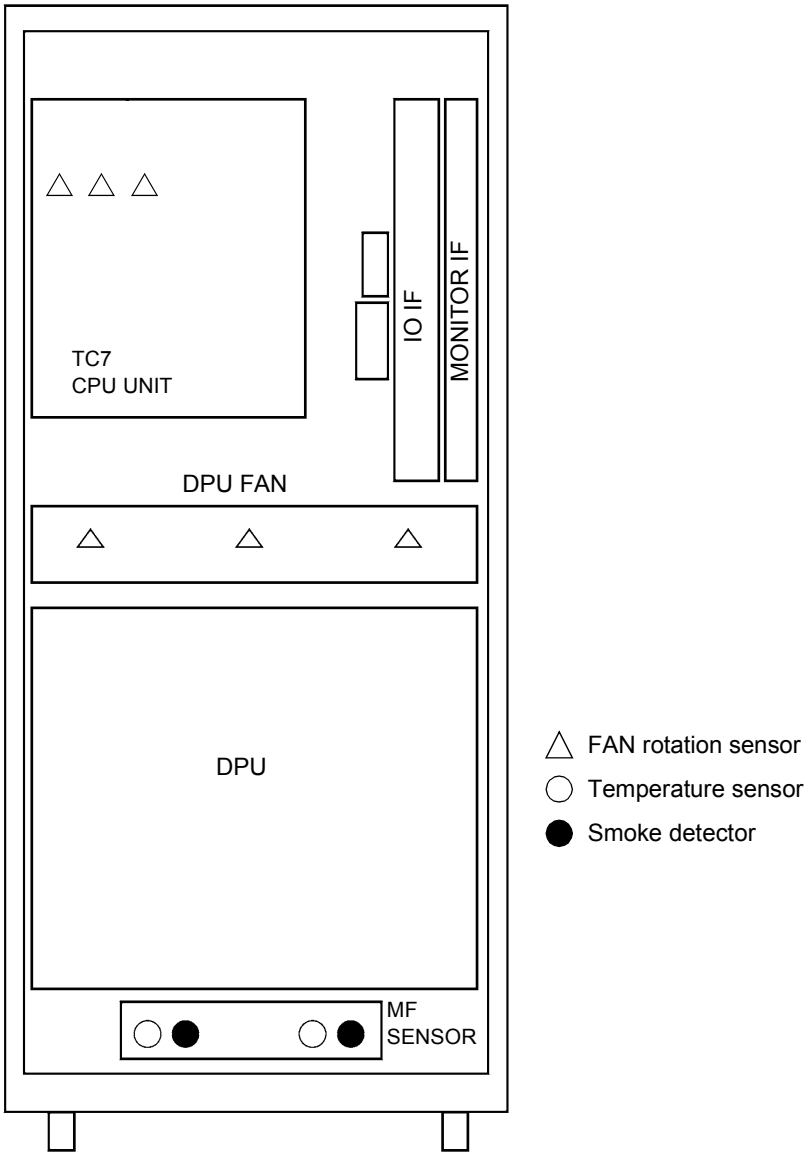

Figure 6-10 TC7 MF Safety Device Mounting Position (Front View when Setting DOWN FLOW)

MF REAR VIEW

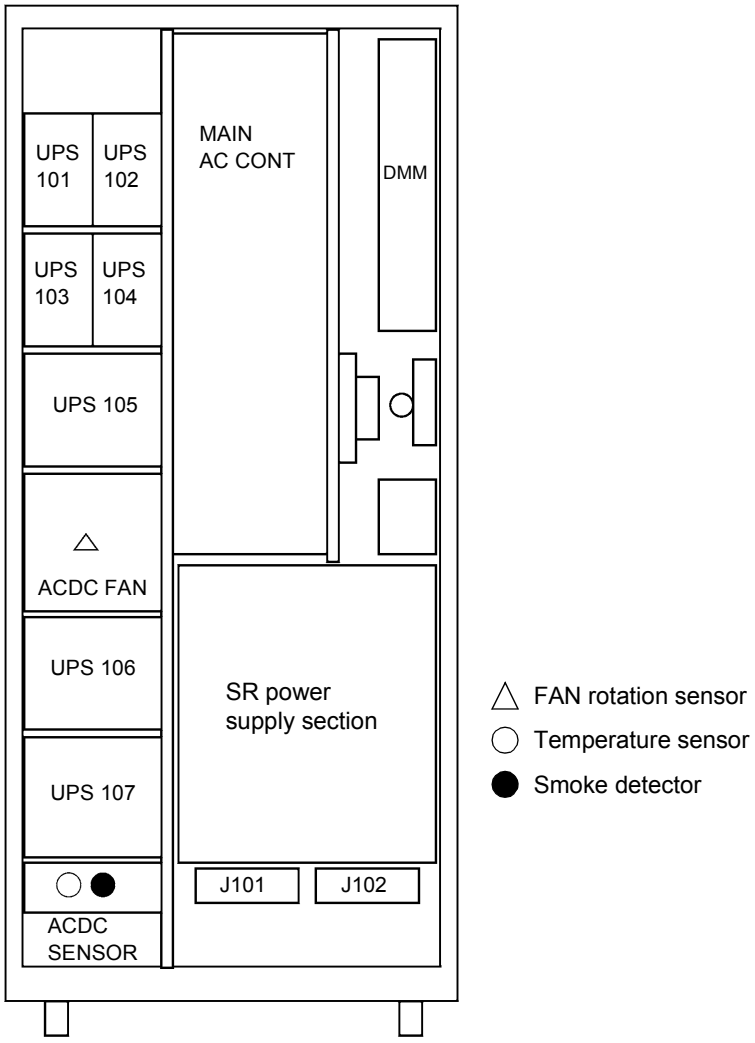

Figure 6-11 MF Safety Device Mounting Position (Rear View when Setting DOWN FLOW)

TH TOP VIEW

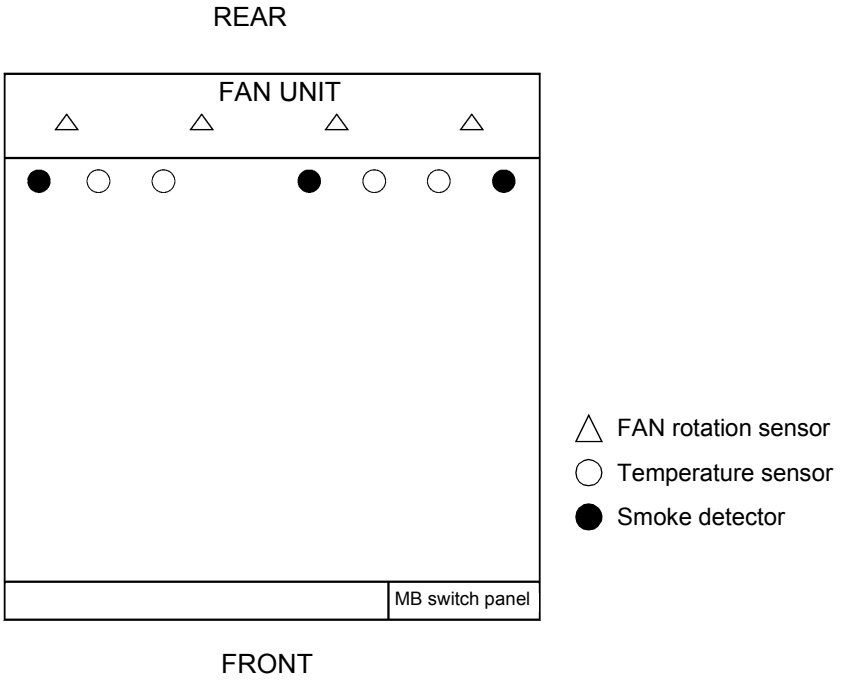

Figure 6-12 TH Safety Device Mounting Position

6.4 Center of Gravity, Frame Structure

Main Frame Center of Gravity Diagrams

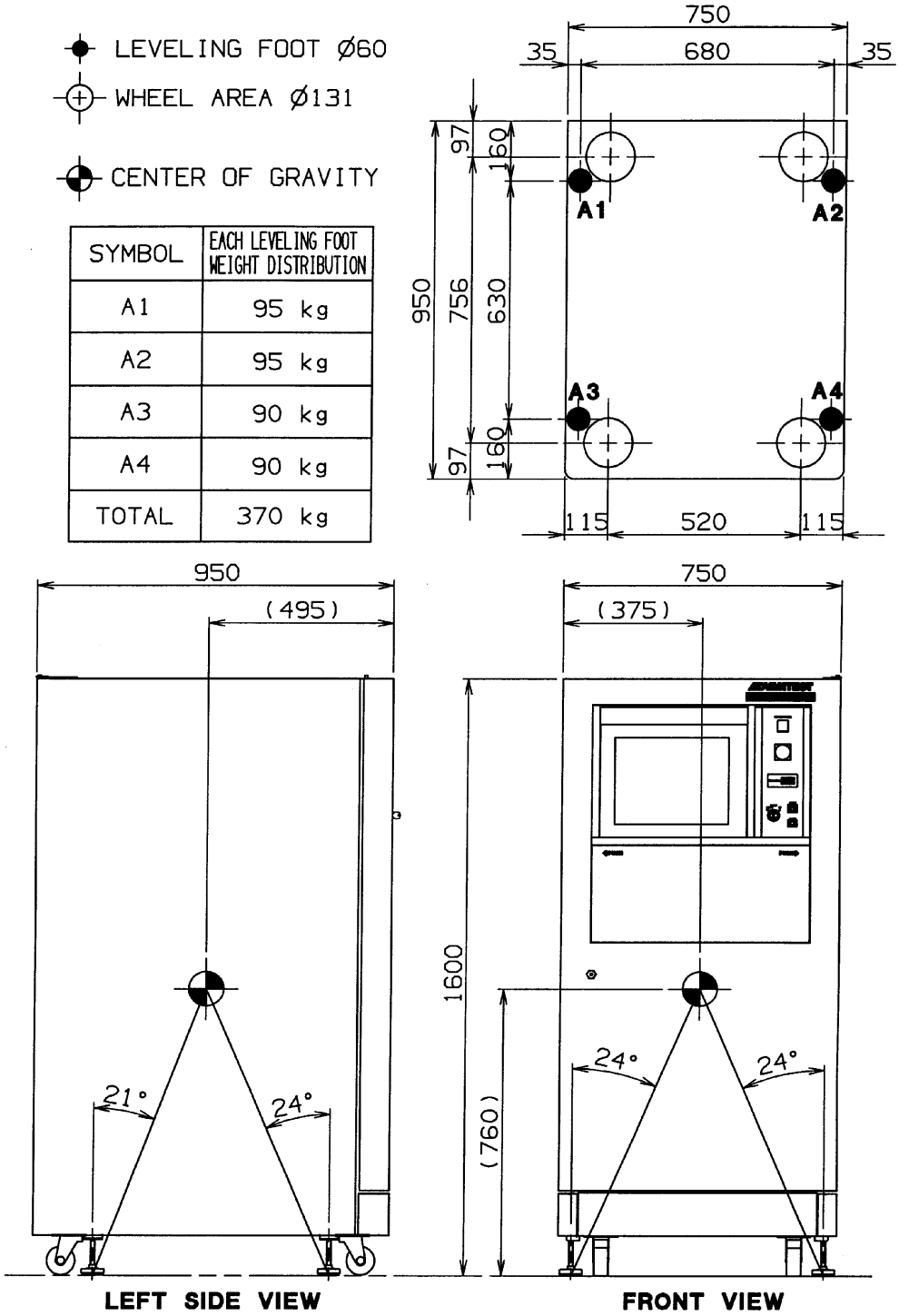

SYMBOL	EACH LEVELING FOOT WEIGHT DISTRIBUTION
A1	95 kg
A2	95 kg
A3	90 kg
A4	90 kg
TOTAL	370 kg

Figure 6-13 Main Frame Center of Gravity Diagrams

Main Frame Structure Diagram

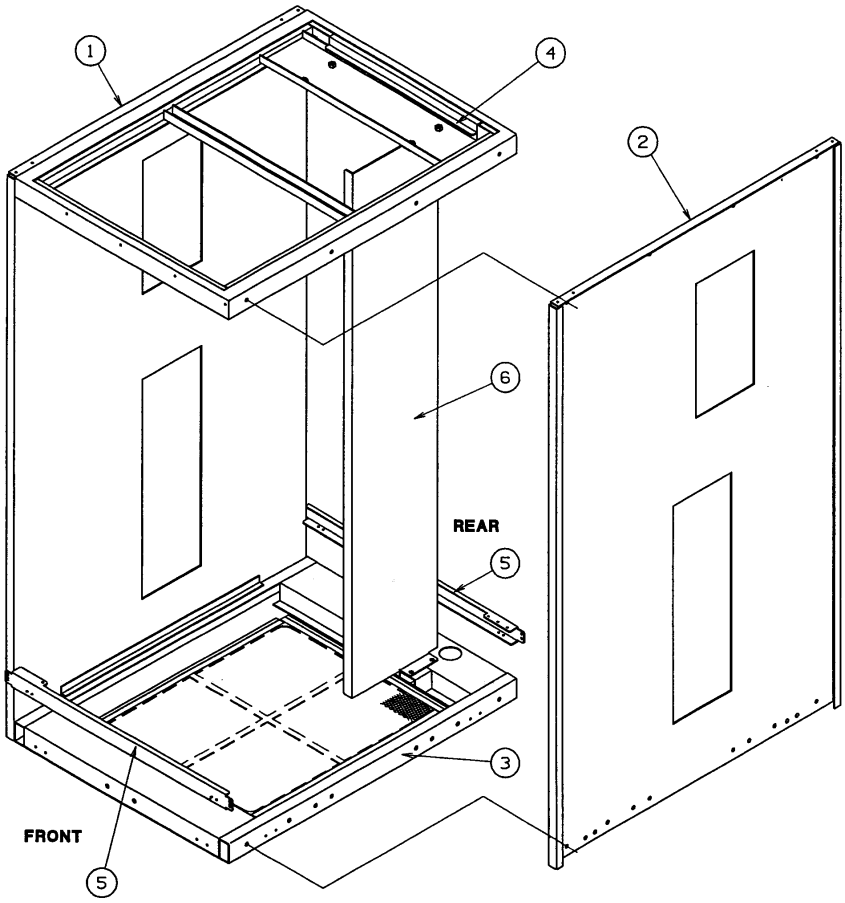

No.	TITLE	MATERIAL	MEASURE
1	SIDE FRAME L	SPCC-SD	25×890×1494, t2.6
2	SIDE FRAME R	SPCC-SD	25×890×1494, t2.6
3	BASE FRAME	SPCC-SD	50×890×650, t2.6
4	TOP FRAME	SPCC-SD	50×890×650, t2.6
5	DOOR HOLDER	SPCC-SD	27.5×42×689, t2.6
6	CTR FRAME RM	SPCC-SD	25×265×1400, t2.6

Figure 6-14 Main Frame Structure Diagram

6.5 Unit Power Supply Specification List

The unit power supply specifications are listed below.

Table 6-1 Main Frame Unit Power Supply Specification Table

UPS No.	Power Supply Specification	Power Supply Name	Voltage	Remarks
UPS1	DPS-001627	SR330-24	-24 V	MF FAN
UPS2	DPS-001895	SR35-5	+5 V	IO IF/M IF (SYS sync.)
UPS3	DPS-001895	SR35-5	-5 V	IO IF (SYS sync.)
UPS4	DPS-001895	SR35-5	+5 V	IO IF/M IF (TC sync.)
UPS5	DPS-001895	SR35-5	-5.2 V	IO IF (TC sync.)
UPS6	DPS-001615	SR60-12	-12 V	TC FAN (TC sync.)
UPS7	DPS-001627	SR330-24	-24 V	TH FAN
UPS8	DPS-001904	SR35-15	+15 V	PBP15V
UPS9	DPS-001904	SR35-15	-15 V	PBM15V
UPS10	DPS-002504	SR35-24	+24 V	AIR CONT (SYS sync.)
UPS11	DPS-001615	SR60-12	+11.5 V (HS)	TH
UPS12	Spare Power Supply			
UPS13	DPS-001895	SR35-5	+5 V	PBVCC
UPS14	DPS-001895	SR35-5	-5.2 V	PBVEE
UPS15	DPS-001614	SR60-5	+5 V	PBRLVCC
UPS16	DPS-001616	SR60-15	+15 V	TH
UPS17	DPS-001616	SR60-15	-15 V	TH
UPS18	DPS-001742	SR60-9	-8 V (HS)	TH
UPS19	DPS-002504	SR35-24	+24 V	CBOX
UPS101	DPS-001798	DCDC65+65	+60 V/-60 V	DPU
UPS102	KH9-9809	Blank Panel		
UPS103	DPS-001786	DCDC15	+15 V	DPU
UPS104	DPS-001786	DCDC15	-15 V	DPU
UPS105	WBL-PS3750WX2	ACDC		
UPS106	WBL-PS3750WX2	ACDC		
UPS107	WBL-PS3750WX2	ACDC		
DPU UPS1	WUN-11V4B18V	Power Supply Board		DPU
DPU UPS2	WUN-11V2B5V2B3V	Power Supply Board		DPU

Table 6-2 TH Unit Power Supply Specification Table

UPS No.	Power Supply Specification	Power Supply Name	Remarks
BPS1	WUN-11V2R5VDM3V5VA	Power Supply Board	For the TH (When using 512 pins)
BPS2	WUN-11V2R5V5V2R5V5A	Power Supply Board	For the TH (When using 256 pins or more)
BPS3	WUN-5V2R5V3B3VA	Power Supply Board	For the TH (When using 128 pins or more)
BPS4	WUN-11V2R5V3V5V2BA	Power Supply Board	For the TH (When using 128 pins or more)
BPS5	WUN-11VDM3B2R5VA	Power Supply Board	For the TH (When using 384 pins or more)

7. BOARD LOCATION

TC6/TC7 mounting board

Table 7-1 TC6/TC7 Mounting Board Location

Slot No.	Board No.	Circuit Name	Remarks
	BGC-027896	EWS IF	

MONITOR IF and IO IF mounting board

Table 7-2 MONITOR IF and IO IF Mounting Board Location

Slot No.	Board No.	Circuit Name	Remarks
1	BGR-024885X08	MONITOR IF	
2	BGR-027897	IO IF	
	BGR-027898	IO OPTION IF	OPTION

DPU mounting board

Table 7-3 DPU Mounting Board Location

Slot No.	Board No.	Circuit Name	Remarks
1	WUN-11V4B18V	DPU UPS1	
2	WUN-11V2B5V2B3V	DPU UPS2	
3	BGR-024897	DPS CONT1	
4	BGR-023715X03	DPS1 (1-8)	
5	BGR-024897	DPS CONT2	
6	BGR-023715X03	DPS2 (9-16)	
7	BGR-024897	DPS CONT3	
8	BGR-023715X03	DPS3 (17-24)	
9	BGR-024897	DPS CONT4	If the boards are mounted in SLOT11 and SLOT12, SLOT9 and SLOT10 cannot be used.
10	BGR-023715X03	DPS4 (25-32)	
11	BGR-026706	40VPPS	
12	BGR-029220	DPSMUX	
13	BGR-026245	IFL	
14	BGR-023712	UDC CONT	
15	BGR-023713X02	UDC	
16	BGR-023711X02	MDC1	1-128ch TH1 (Use revision number BGC or later)
17	BGR-023711X02	MDC2	129-256ch TH1 (Use revision number BGC or later)
18	BGR-023711X02	MDC3	257-384ch TH1 (Use revision number BGC or later)
19	BGR-023711X02	MDC4	385-512ch TH1 (Use revision number BGC or later)
20	BGR-026240	BUS IF	

TH mounting board

Table 7-4 TH Mounting Board Location (1 of 2)

Slot No.	Board No.	Circuit Name	Remarks
1	WUN-11V2R5VDM3V5VA	TH BPS1	When configured with 512 pins.
	KH9-91533	BPS dummy	When configured with 128, 256, or 384 pins.
2	WUN-11V2R5V5V2R5V5A	TH BPS2	When configured with 256, 384, or 512 pins.
	KH9-91533	BPS dummy	When configured with 128 pins.
3	WUN-5V2R5V3B3VA	TH BPS3	
4	BIS-029043	STICK	For the T6575
	BIS-029043X02		For the T6565
	BIS-029043X03		For the T6535
5	BPR-033286 or (BIR-027900)	SQPG	BIR-027900 cannot be ordered because parts used on this board have been discontinued.
6	BGR-029053	OPPG dummy	
	BIR-027902	OPPG	OPTION (SCPG4G+ALPG)
	BIR-027902X02		OPTION (SCPG16G+ALPG)
7	BMS-029040 (STE64MW)	PE08	417-448, 481-512ch
	KH9-91531	PE dummy	When configured with 128, 256, or 384 pins.
8	BMS-029040 (STE64MW)	PE06	289-320, 353-384ch
	KH9-91531	PE dummy	When configured with 128 or 256 pins.
9	BMS-029040 (STE64MW)	PE04	161-192, 225-256ch
	KH9-91531	PE dummy	When configured with 128 pins.
10	BMS-029040 (STE64MW)	PE02	33-64, 97-128ch
11	BMS-029040 (STE64MW)	PE01	1-32, 65-96ch
12	BMS-029040 (STE64MW)	PE03	129-160, 193-224ch
	KH9-91531	PE dummy	When configured with 128 pins.
13	BMS-029040 (STE64MW)	PE05	257-288, 321-352ch
	KH9-91531	PE dummy	When configured with 128 or 256 pins.
14	BMS-029040 (STE64MW)	PE07	385-416, 449-480ch
	KH9-91531	PE dummy	When configured with 128, 256, or 384 pins.
15	BGS-026357	TERM (IDDQ dummy)	
	WUN-T6500IDDQX02	IDDQ	OPTION
16	BGR-029045	DCAP dummy	
	BIS-029044	DCAP+AFM	OPTION (can be used with STE64MW)
	BIS-029044X02	DCAP	OPTION (can be used with STE64MW)
17	KH9-91530	DA/AD dummy	
	BIS-026339X02 BIS-027890	DA/AD	OPTION
18	BGS-026241	CONTACT	
	BIS-029624	HSC_CONTACT	OPTION (HSCLK Op.)
19	WUN-11V2R5V3V5V2BA	TH BPS4	

Table 7-4 TH Mounting Board Location (2 of 2)

Slot No.	Board No.	Circuit Name	Remarks
20	WUN-11VDM3B2R5VA	TH BPS5	When configured with 384 or 512 pins.
	KH9-91533	BPS dummy	When configured with 128 or 256 pins.

8. WIRING DIAGRAM

8.1 Signal Wiring

Board Name	IO IF	BUS IF	TH IF (STICK)	SQPG	BUS IF	IFL	IO IF
Board specification name	BGR-027897	BGR-026240	BIS-029043 (T6575) BIS-029043X02(T6565) BIS-029043X03(T6535)	BIR-027900	BGR-026240	BGR-026245	BGR-027897
SLOT	2	20	22	21	20	13	2
Unit Name	IO IF	DPU	THU	THU	DPU	DPU	IO IF
Wiring Order							

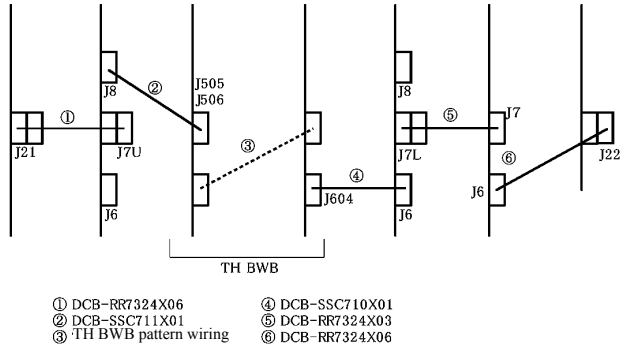

Figure 8-1 Tester Bus Wiring Diagram

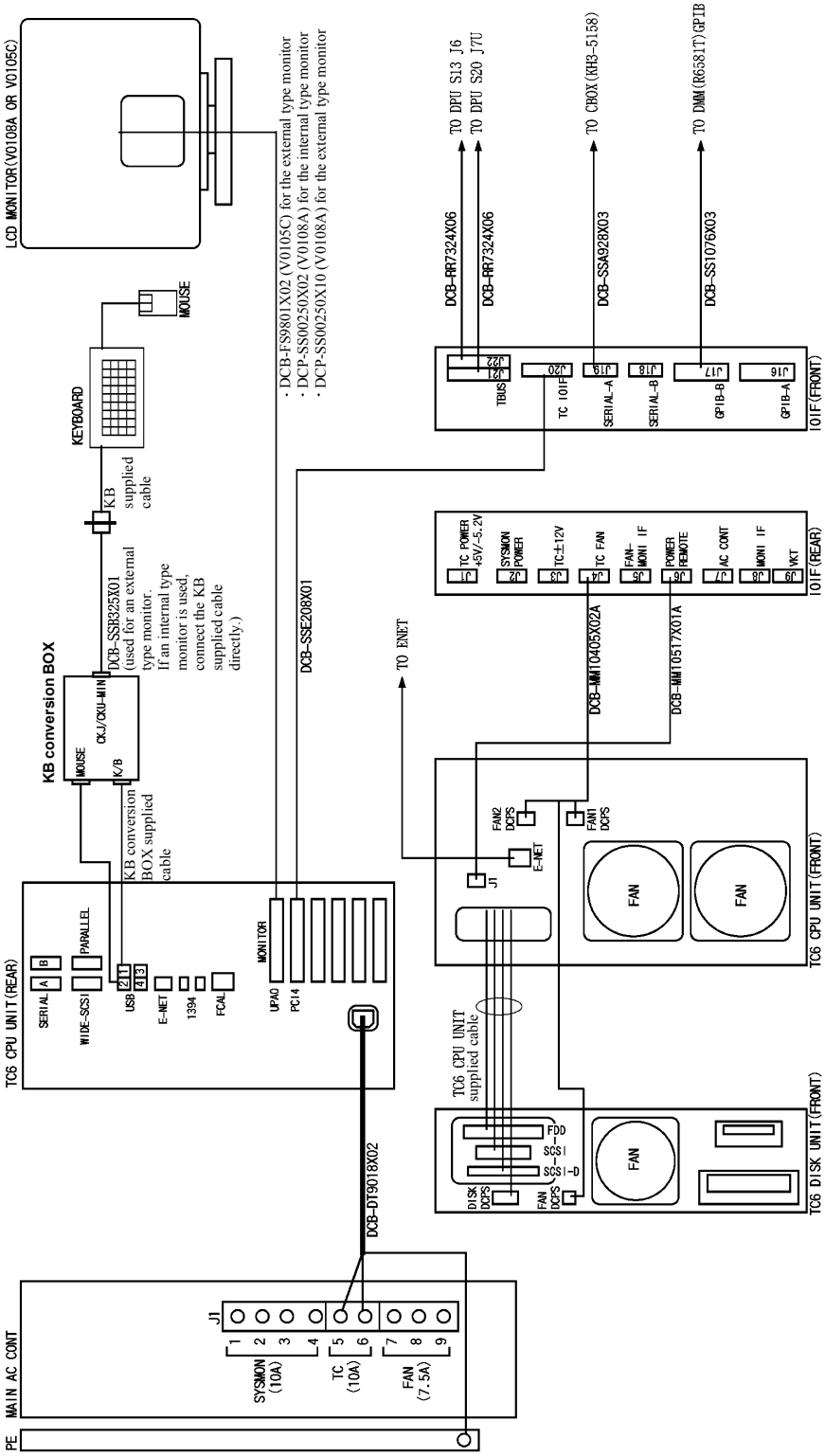

Figure 8-2 TC6 Wiring Diagram

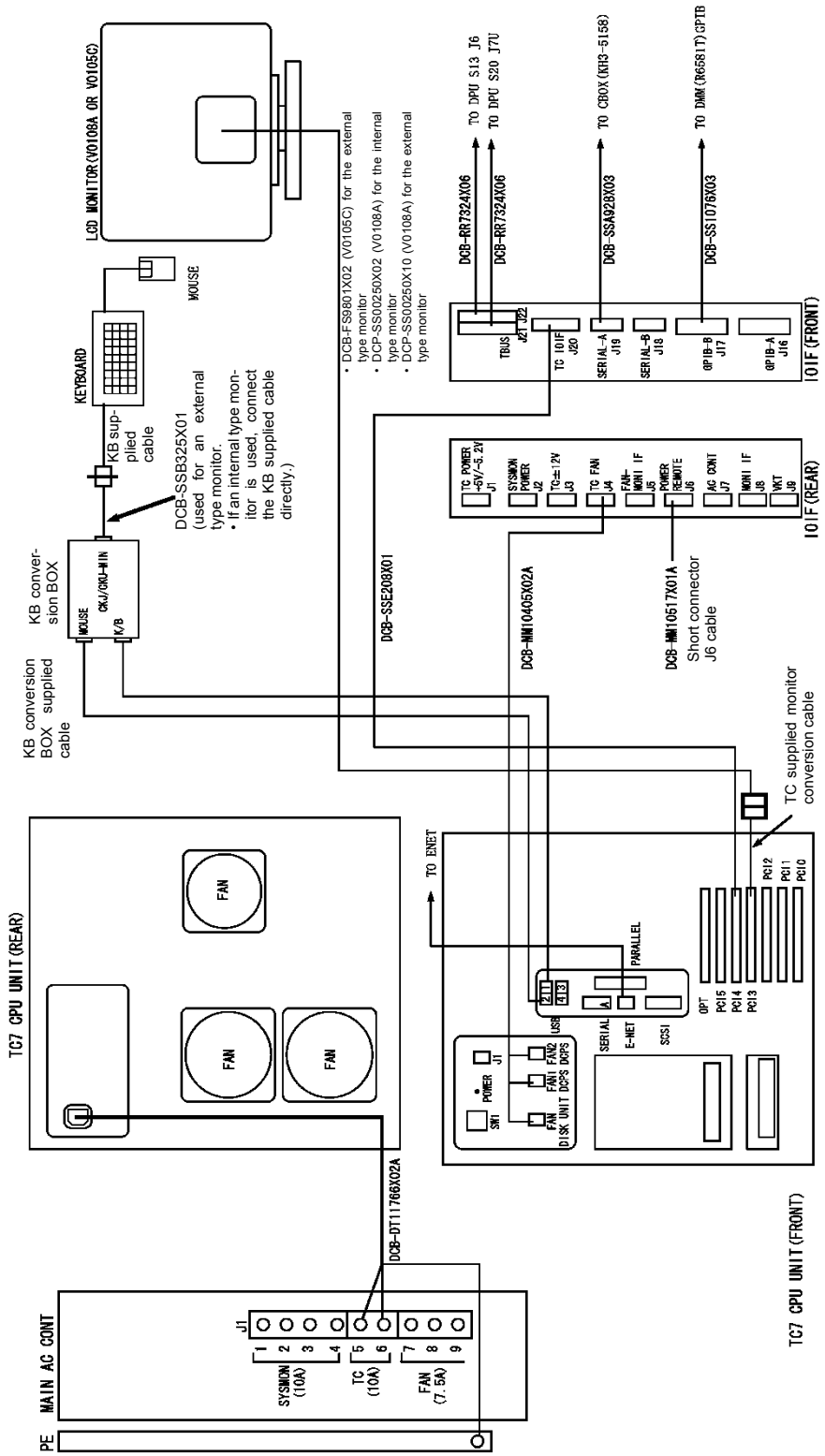

Figure 8-3 TC7 Wiring Diagram

8.1 Signal Wiring

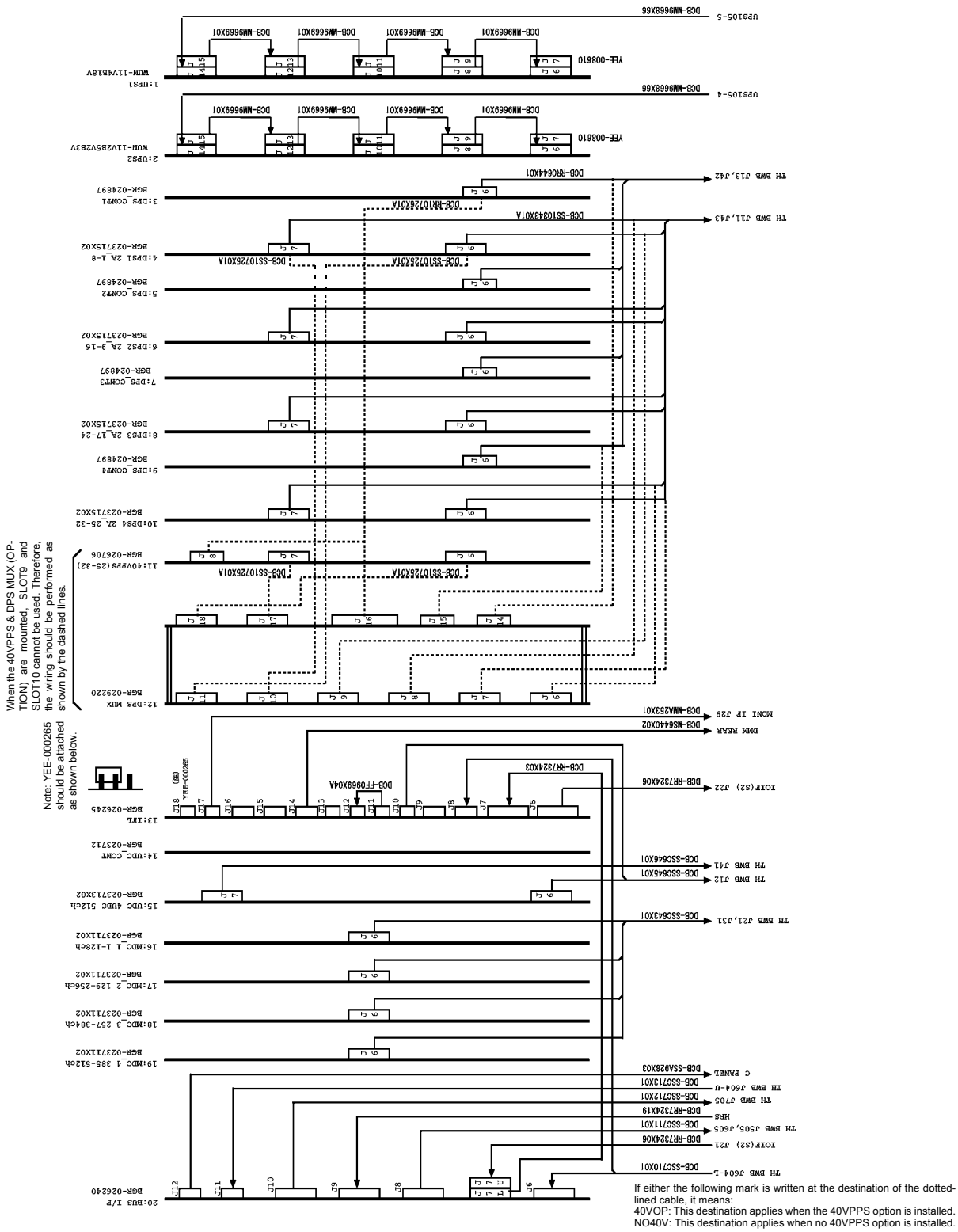

Figure 8-4 DPU Wiring Diagram

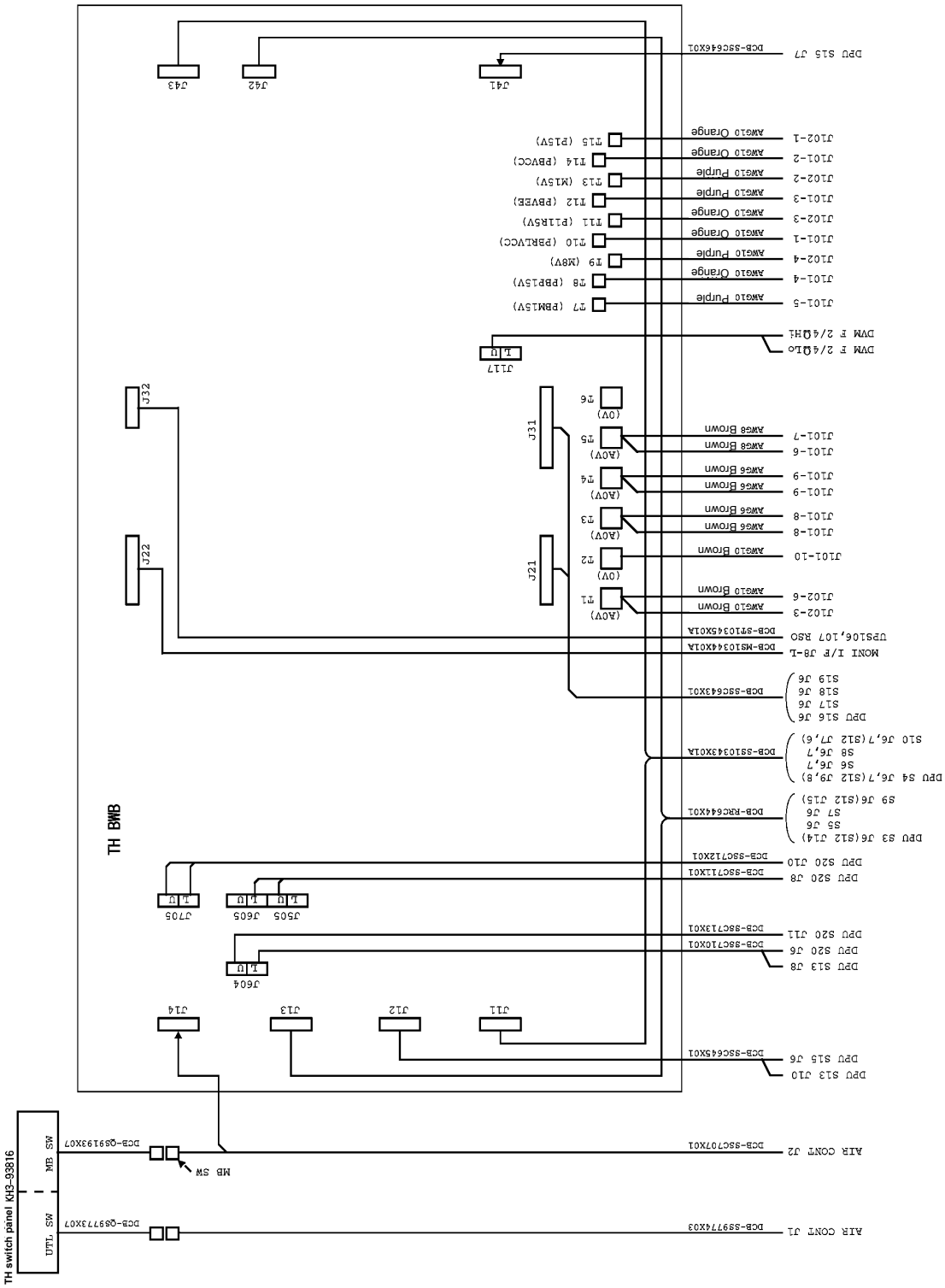

Figure 8-5 TH BWB Cable Wiring Diagram (1)

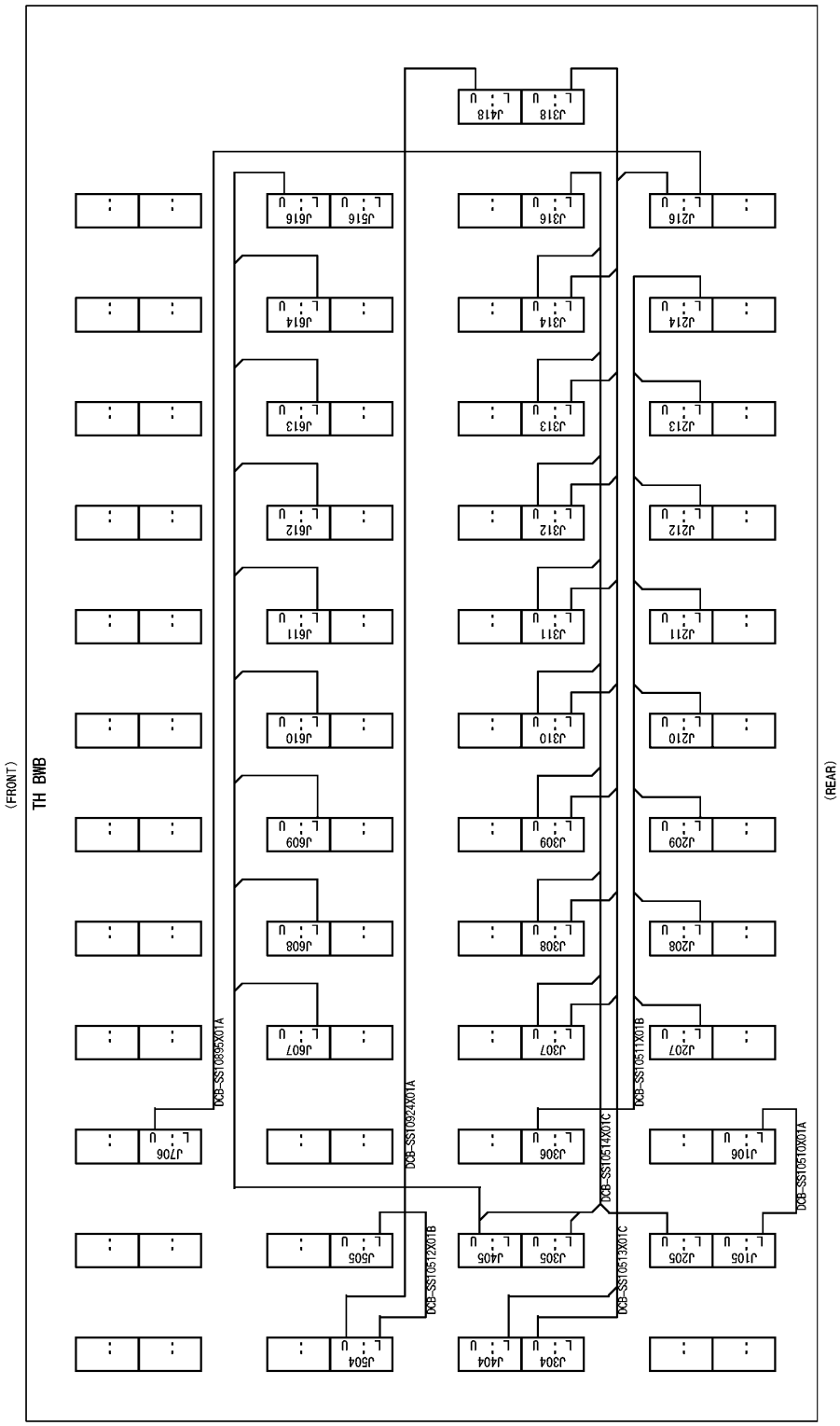

Figure 8-6 TH BWB Cable Wiring Diagram (2)

8.2 Power Supply Wiring

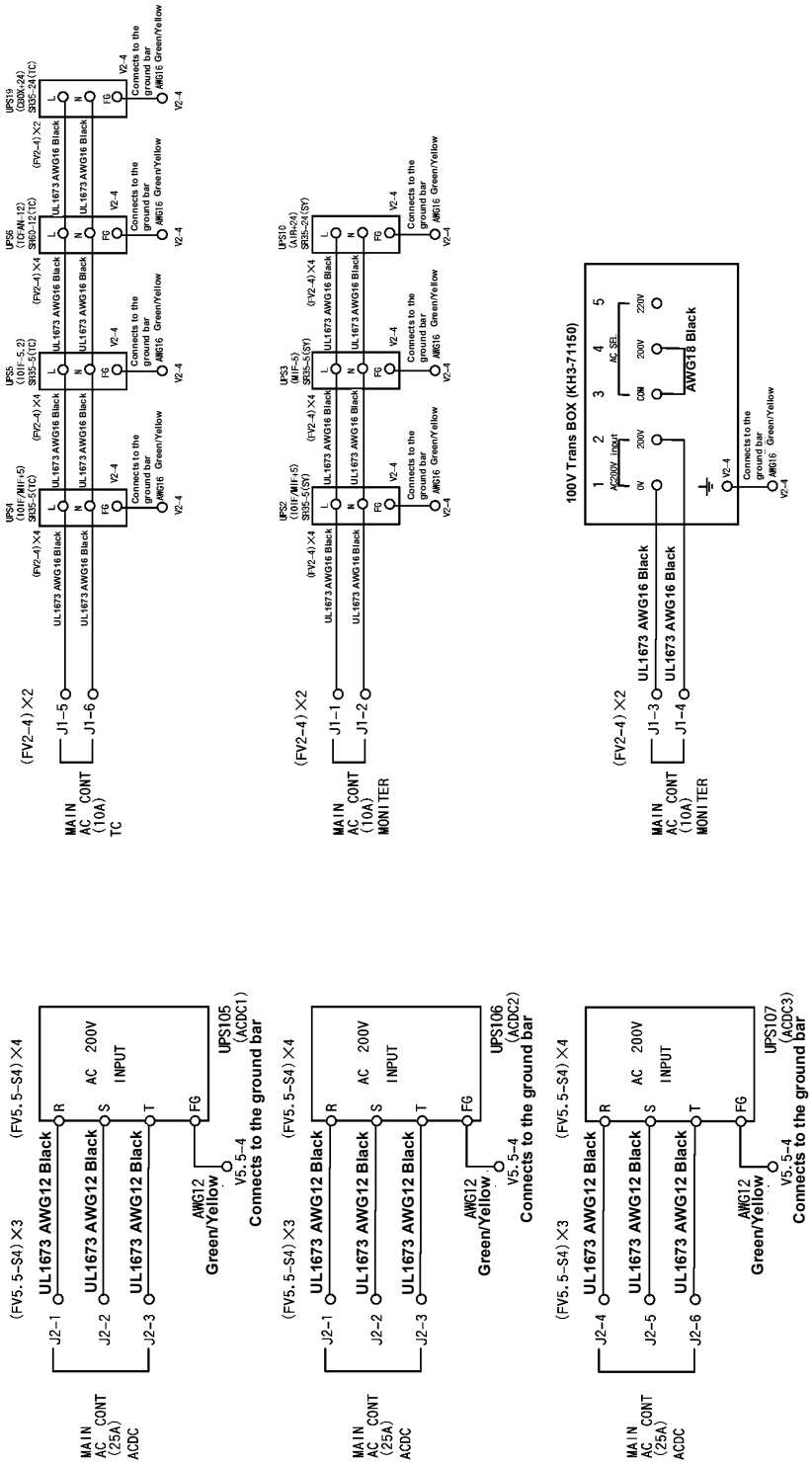

Note1: ***Use the double insulated line (UL1673) for the AWG16 black cable and AWG12 black cable.***

Note2: ***Ensure that the SR power supply is mounted without the short piece between the A and B terminals (in the 200 V input state).***

Note3: ***For the SR power supply in UPS1 to 7, UPS10, and UPS19, attach the short piece between the TOG terminal and the CNT terminal (in the non-sequence control target state). However, for the SR power supply in UPS8, UPS9, UPS11, and UPS13 to 18, remove the short piece between TOG and CNT (in the sequence control state).***

Note4: ***Mount the SR power supply without the short piece between the ACG and FG terminals (to lower the leak current).***

Figure 8-7 200 V AC Connection Diagram (1)

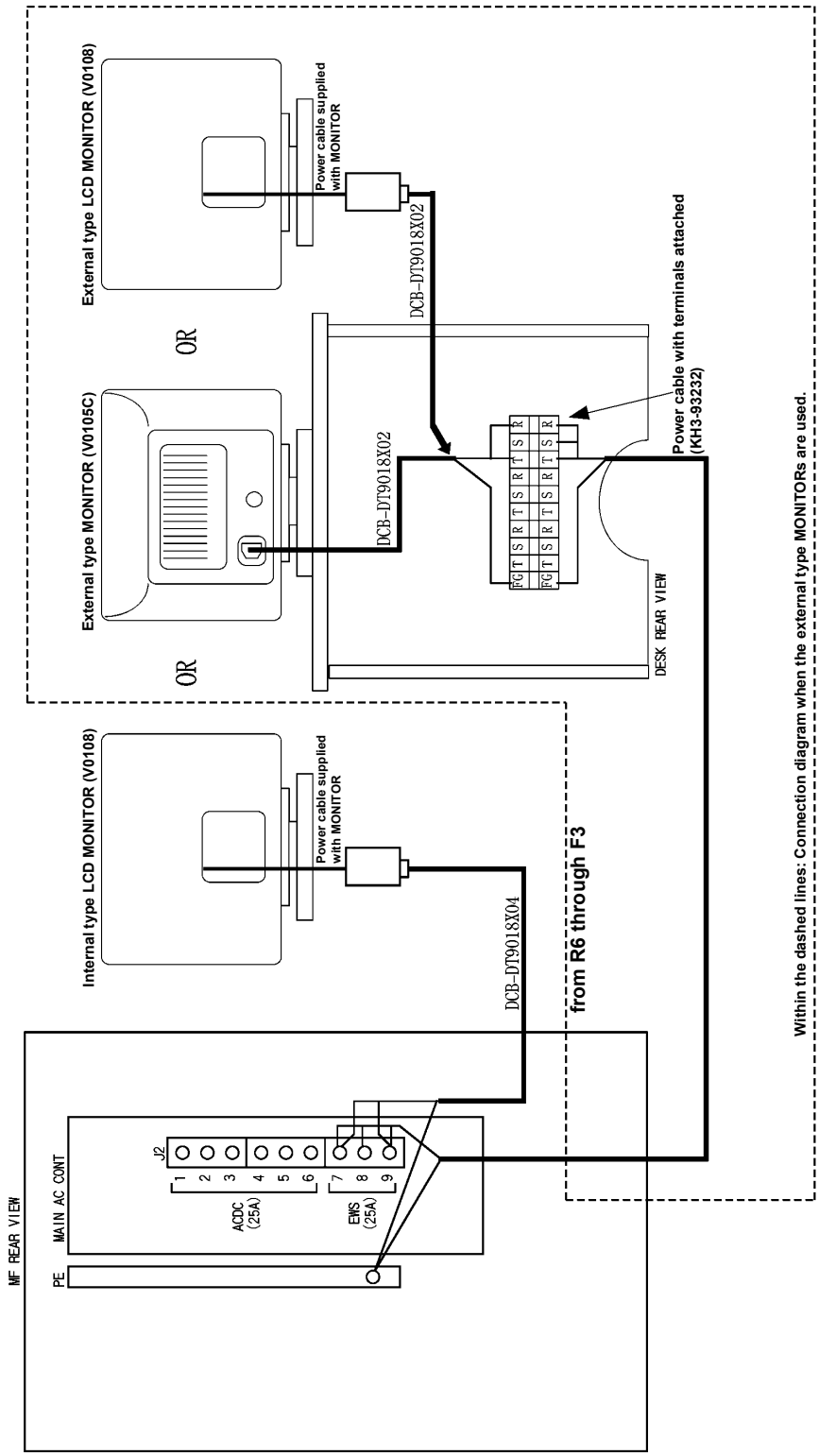

Figure 8-8 200 V AC Connection Diagram (2)

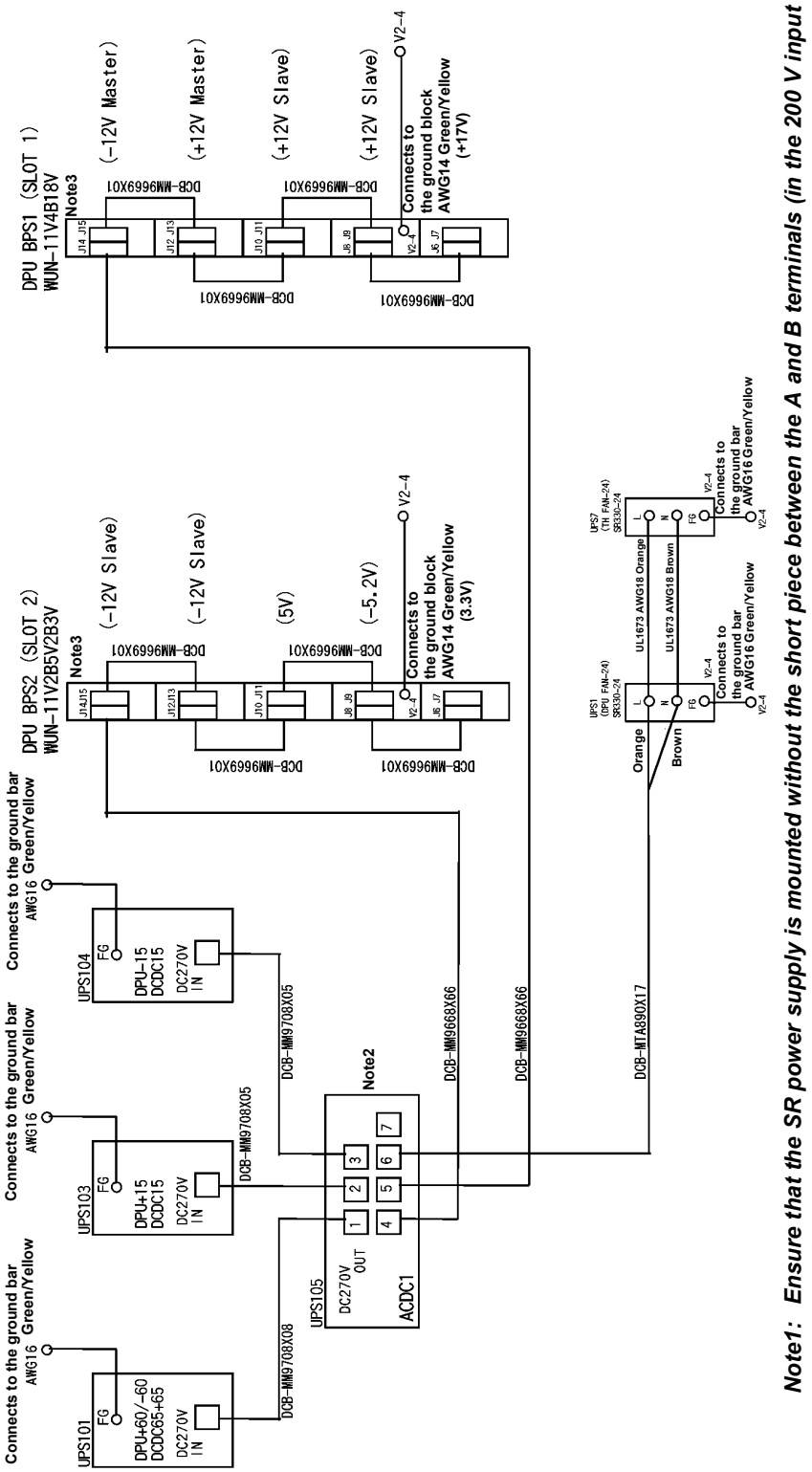

Note1: Ensure that the SR power supply is mounted without the short piece between the A and B terminals (in the 200 V input state).

Note2: Attach YEE-002972 to the ACDC1 vacant connector.

Note3: Attach YEE-008610 to the power supply board vacant connector.

Note4: Use the double insulated line (UL1673) for the AWG18 orange and green cables.

Figure 8-9 270 V DC Wiring Diagram (1)

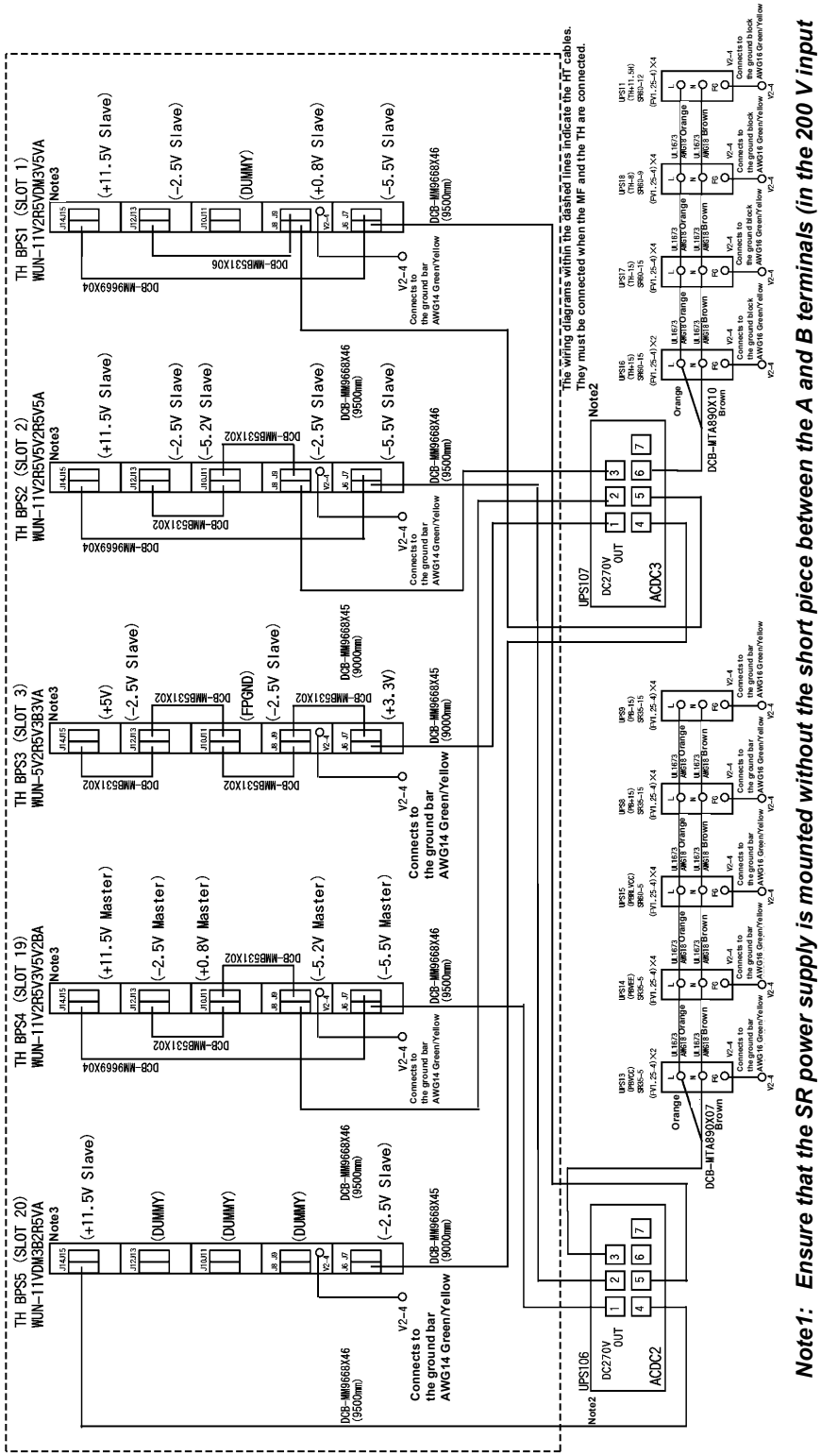

Note1: Ensure that the SR power supply is mounted without the short piece between the A and B terminals (in the 200 V input state).

Note2: Attach YEE-002972 to the ACDC2 and ACDC3 vacant connectors.

Note3: Attach YEE-008610 to the power supply board vacant connector.

Note4: Use the double insulated line (UL1973) for the AWG18 orange and Brown cables.

Figure 8-10 270 V DC Wiring Diagram (2)

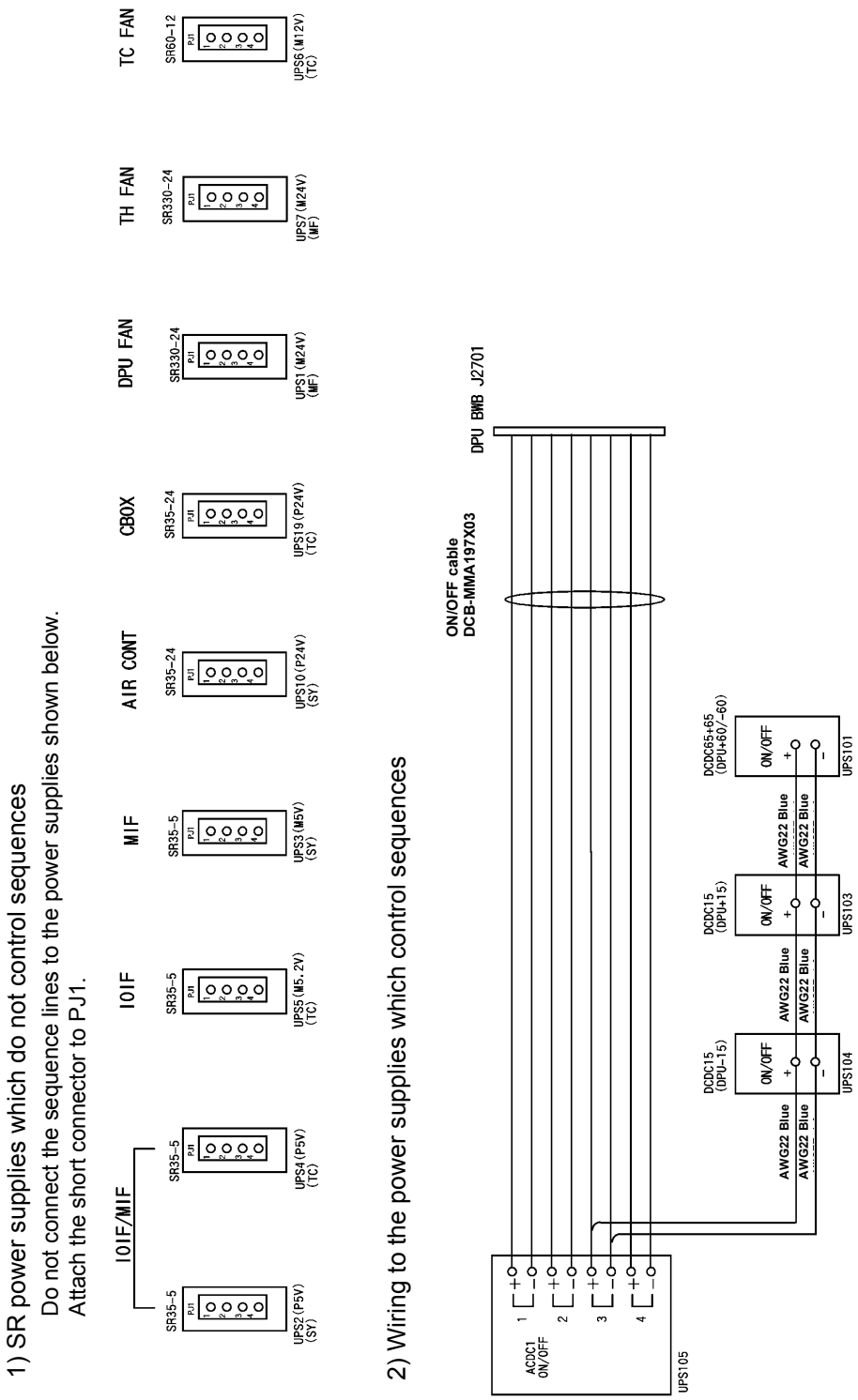

Figure 8-11 SYSTEM ON/OFF Wiring Diagram (1)

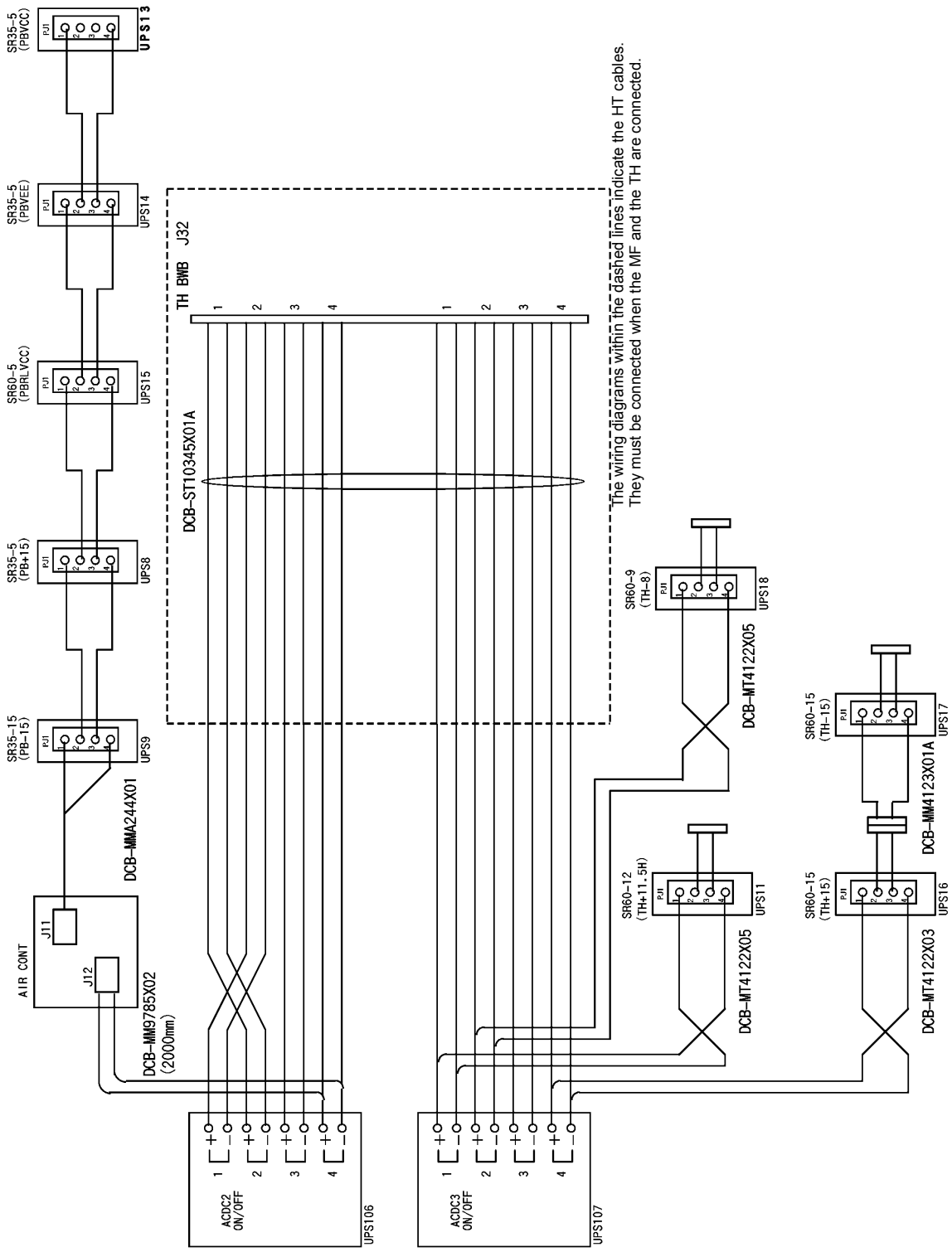

Figure 8-12 SYSTEM ON/OFF Wiring Diagram (2)

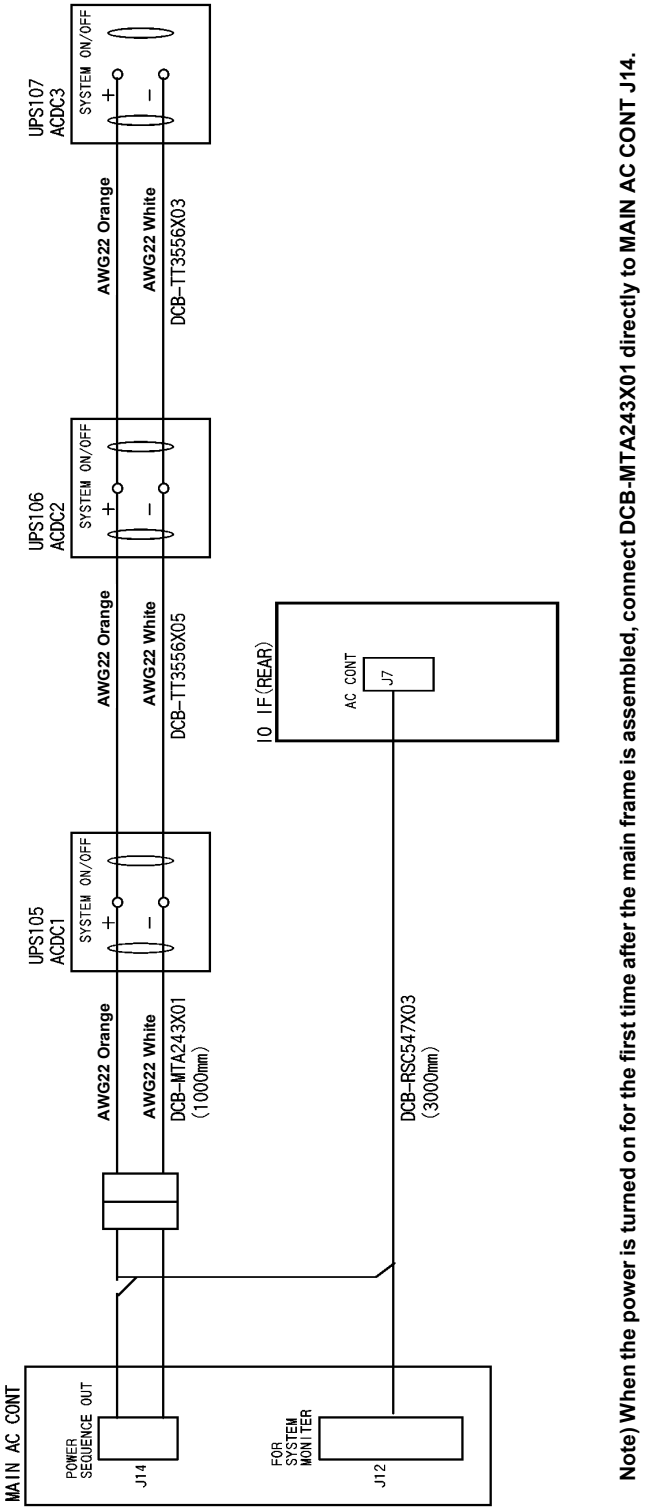

Note) When the power is turned on for the first time after the main frame is assembled, connect DCB-MTA243X01 directly to MAIN AC CONT J14.

Figure 8-13 SYSTEM ON/OFF Wiring Diagram (3)

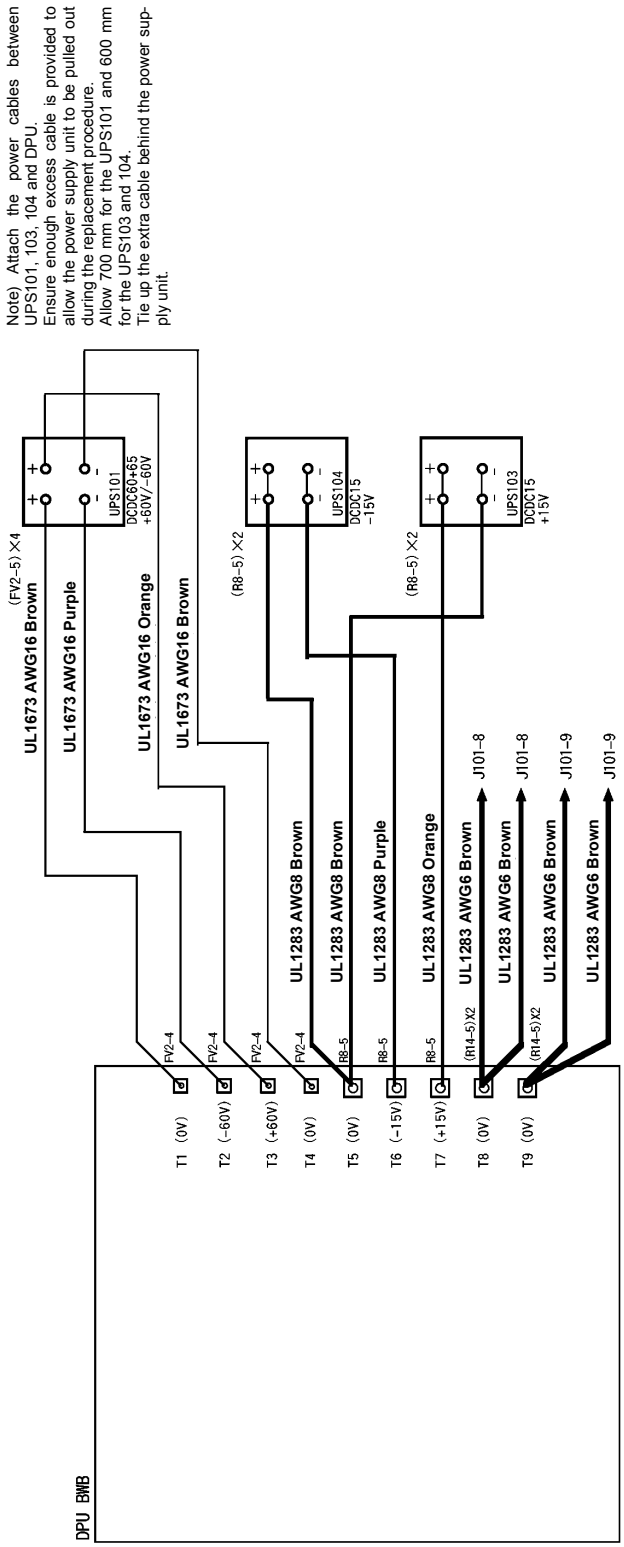

Figure 8-14 DC Power Supply Wiring Diagram (1)

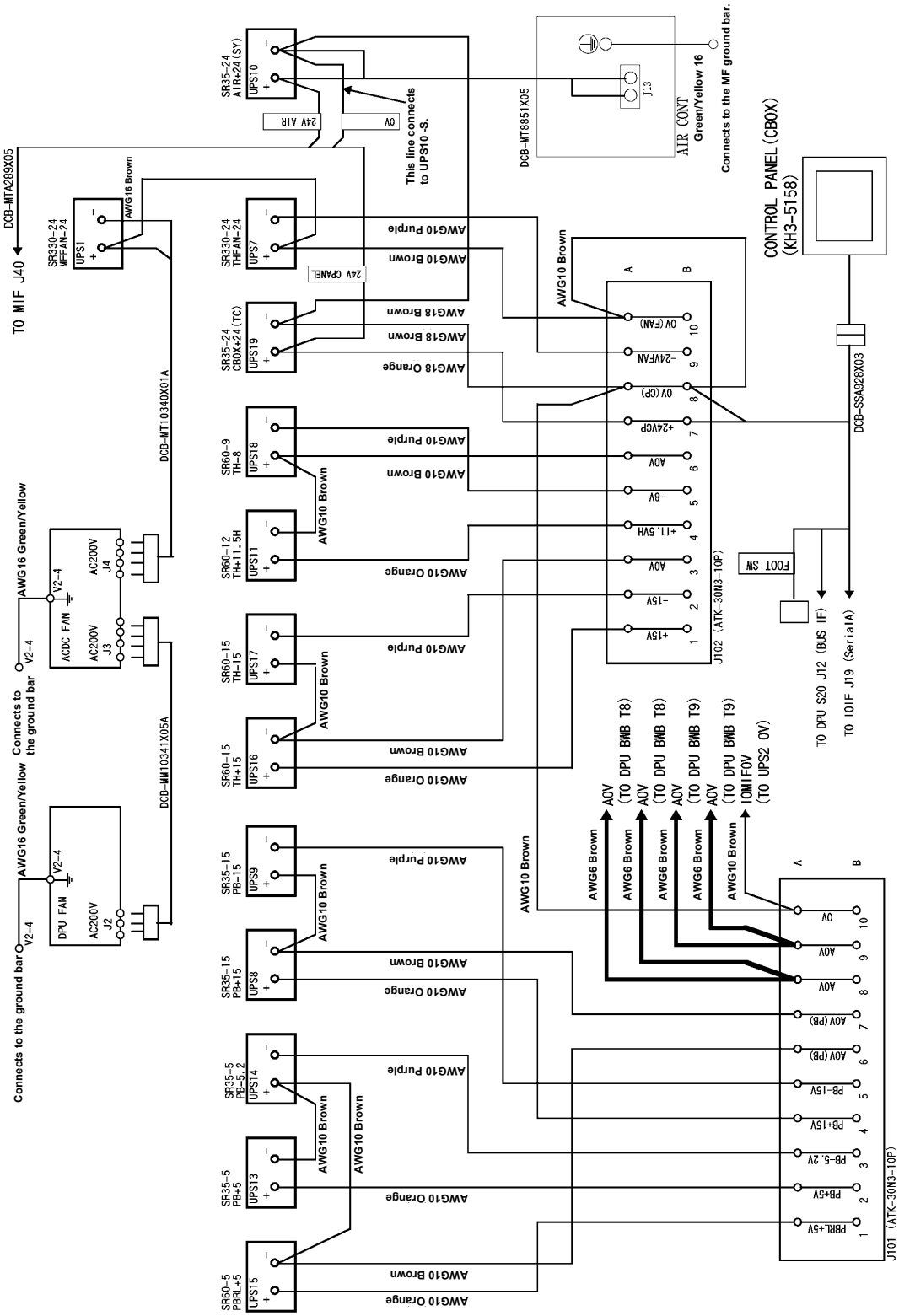

Figure 8-15 DC Power Supply Wiring Diagram (2)

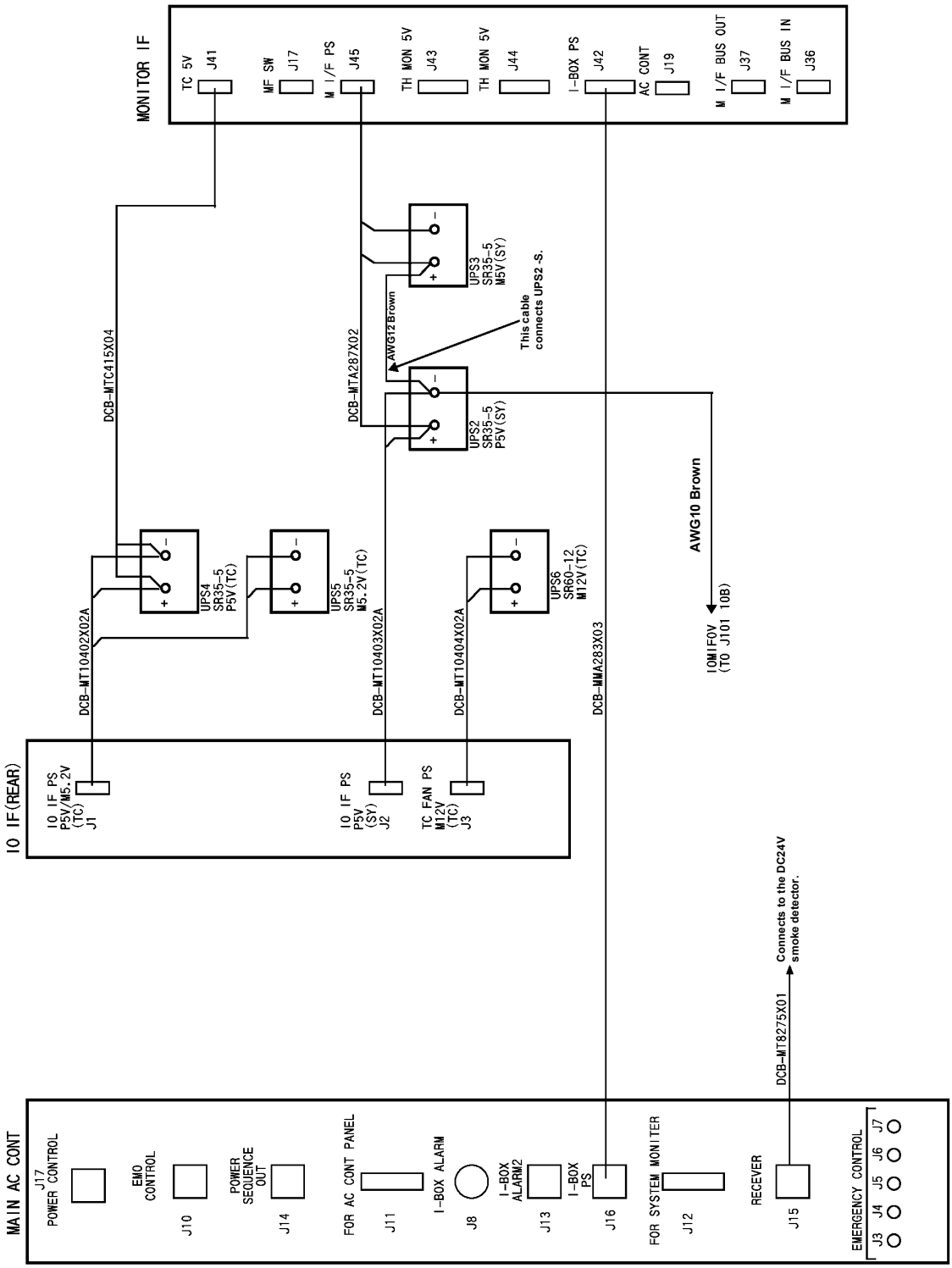

Figure 8-16 DC Power Supply Wiring Diagram (3)

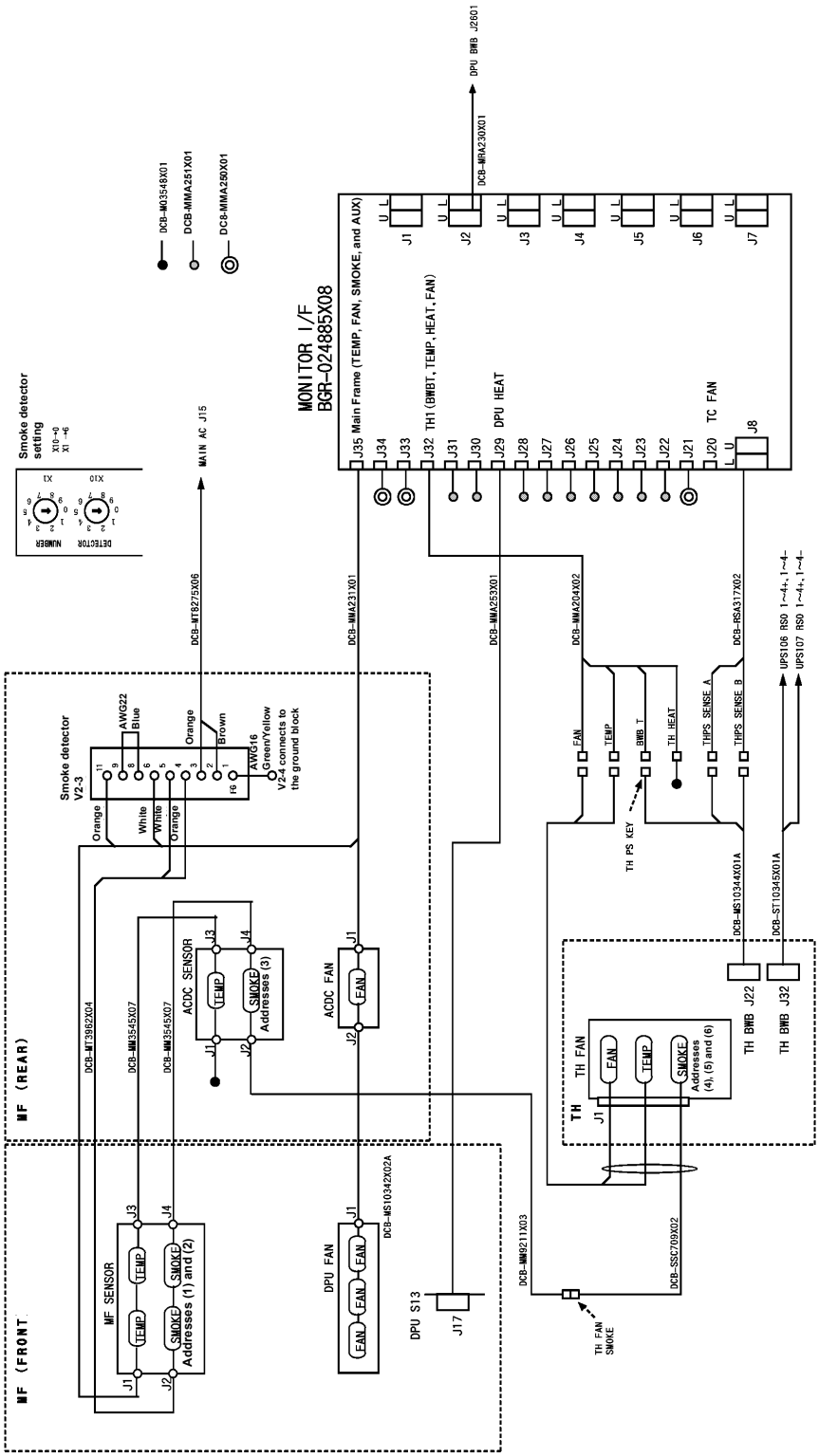

Figure 8-17 Sensor Cable Wiring Diagram

8.2 Power Supply Wiring

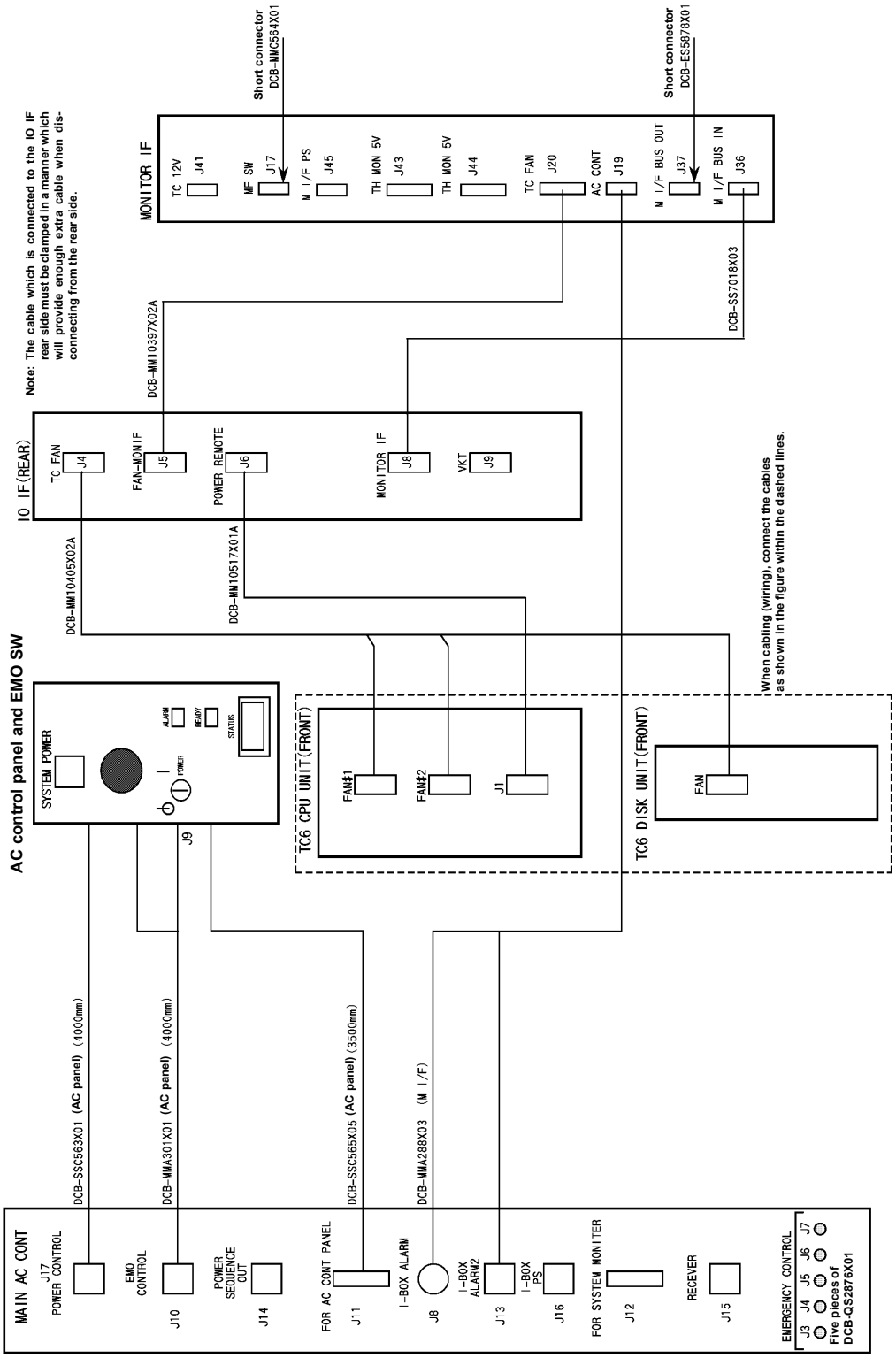

Figure 8-18 AC CONT Wiring Diagram

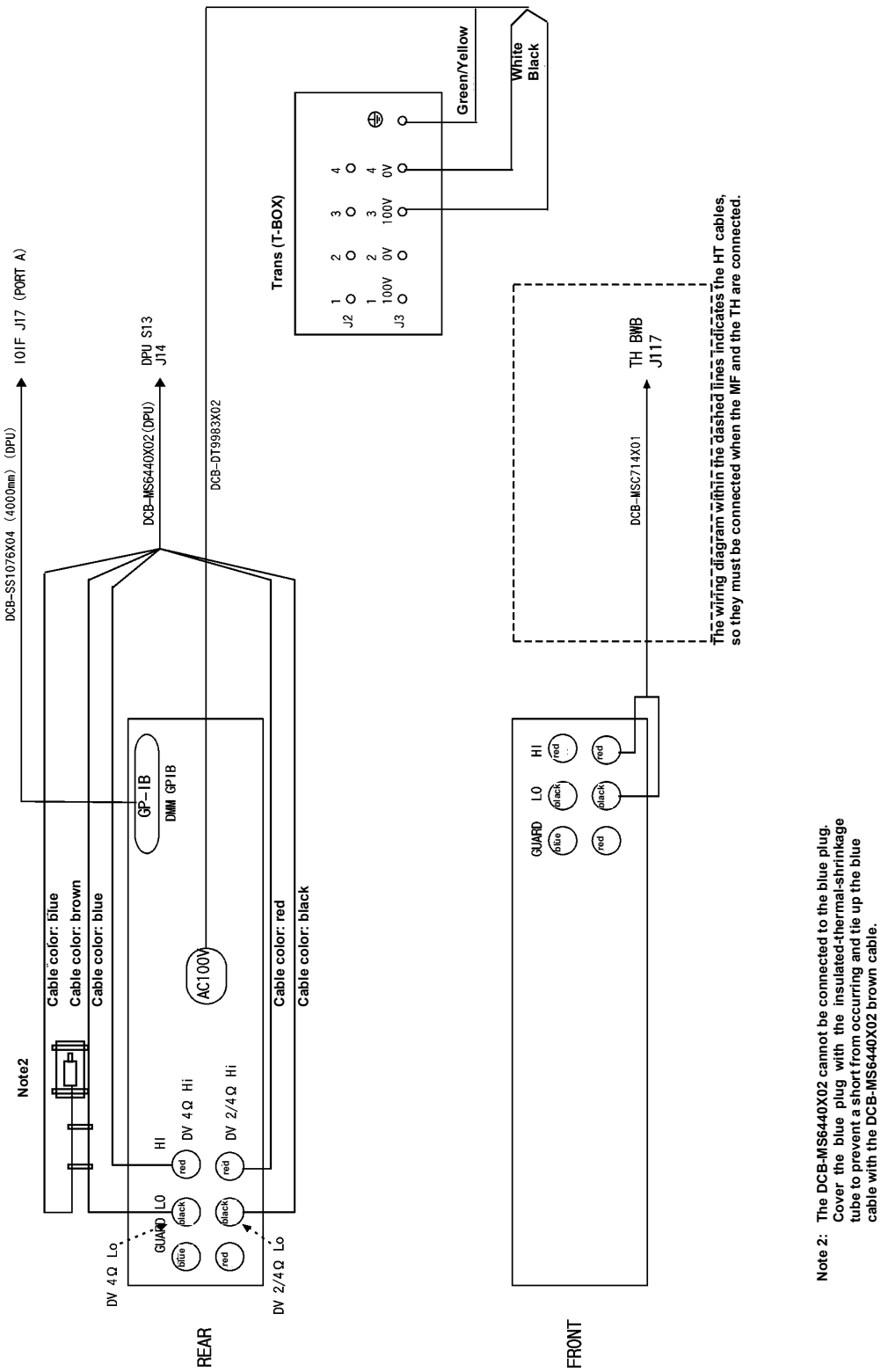

Note 2: The DCB-MS6440X02 cannot be connected to the blue plug. Cover the blue plug with the insulated-thermal-shrinkage tube to prevent a short from occurring and tie up the blue cable with the DCB-MS6440X02 brown cable.

Figure 8-19 DMM Wiring Diagram

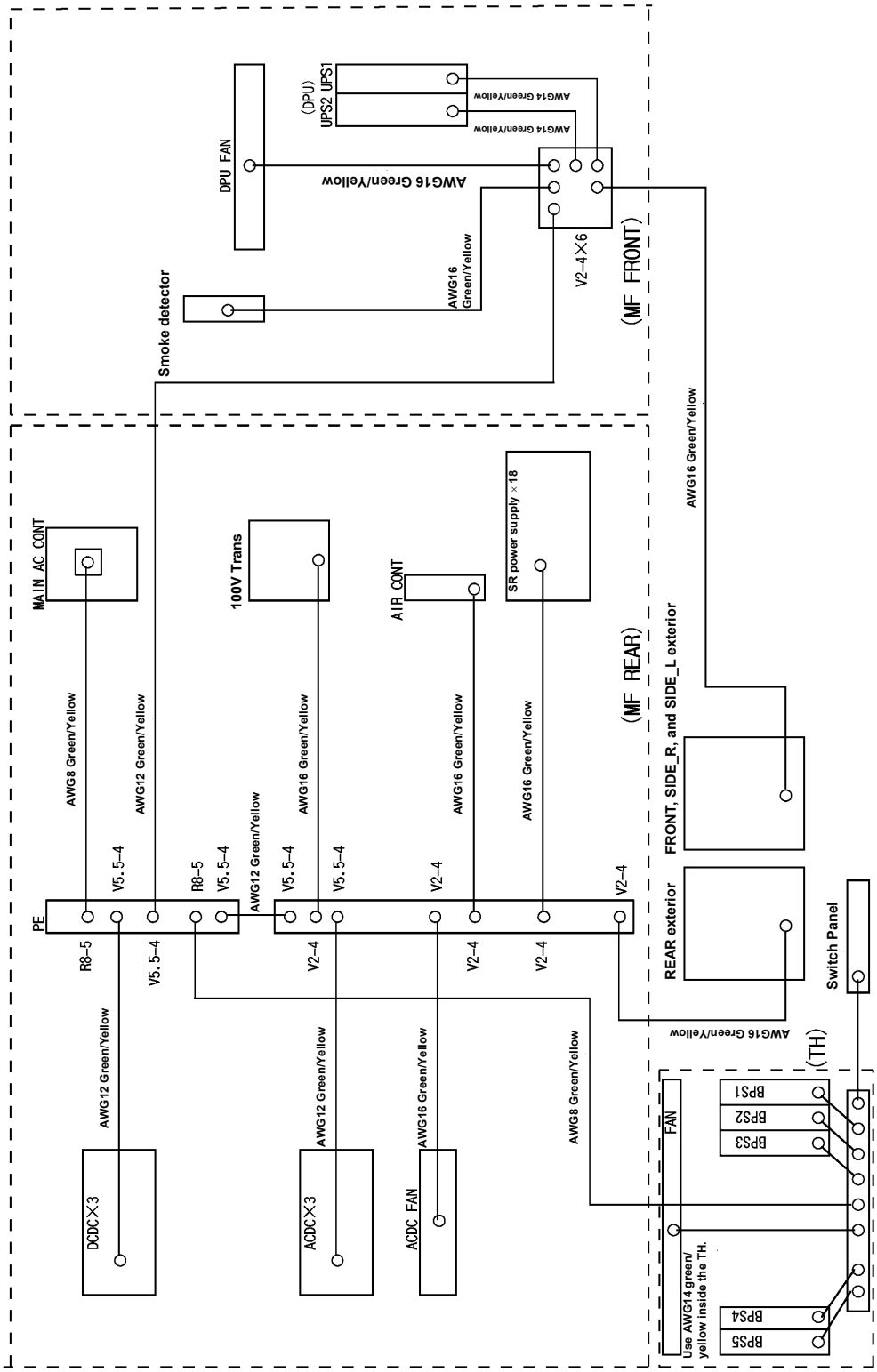

Figure 8-20 FG Wiring Diagram

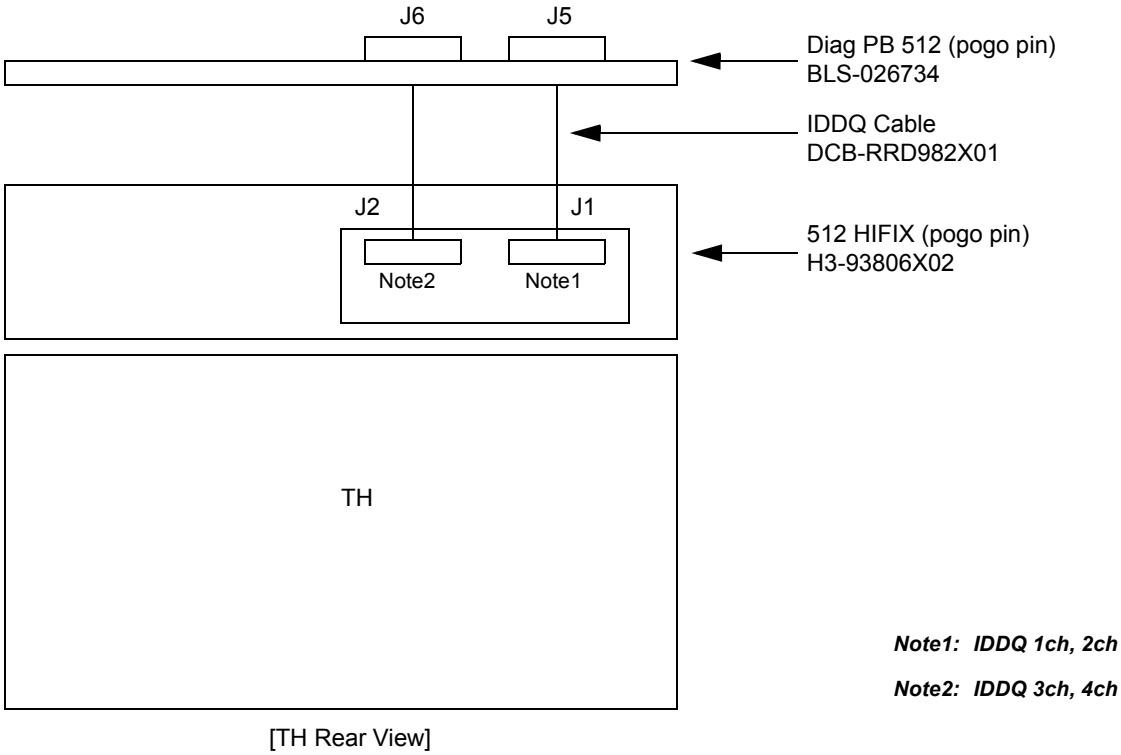

Figure 8-21 IDDQ Cable Connection

9. HANDLING OF HIFIX

This chapter describes the necessary precautions to take when handling the HIFIX in order to prevent the LIF connectors from being broken and to prevent incorrect contact.

WARNING!
Always make sure the HIFIX is handled by two people.

(1) Installing the HIFIX

① Look at the LOCK/FREE switch on the test head to see that the FREE indicator is lit.

② Lift the HIFIX. Make sure this is done by two people.

③ Adjust the direction of the HIFIX. Do this by adjusting the positioning mark (▲).

④ Adjust the HIFIX to the installation position at the top of the test head, then make it horizontal. The hole in the test head cover serves as the guide when installing the HIFIX. The HIFIX can be positioned properly by adjusting its outer profile to the hole in the test head cover.

⑤ Place the HIFIX gently on the test head while holding it horizontally.

⑥ Press the LOCK switch to insert the LIF connector.

⑦ Check to see that the LOCK indicator is lit.

Precautions to be taken when installing the HIFIX

- Place the HIFIX gently.
- Place the HIFIX horizontally.
- Make sure the HIFIX has correct contact. A force may be applied to part of the connector, causing the connector to break.
- Reset the test head to its horizontal position before installing the HIFIX.

○ Correct installation position

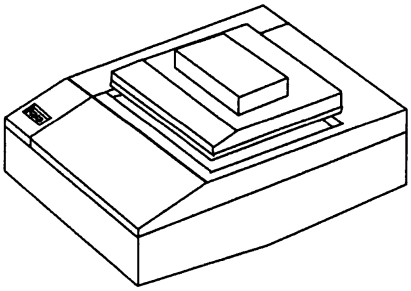

× Wrong installation position

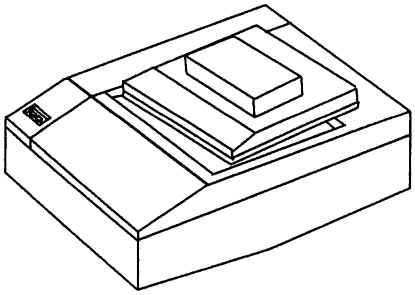

If placed at an incorrect position, the connector may break.

(2) Method for detaching the HIFIX

① Press the FREE switch to remove the LIF connector.

② Check the FREE indicator is lit.

③ Refer to Steps (3) thru (5) in Section 5.4 before lifting the HIFIX.

④ Lift the HIFIX gently, keeping it level. Tilting the HIFIX front-to back or left-to right while lifting it may damage the contactor. Use the guidelines below.

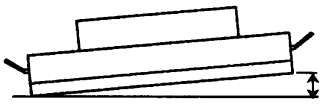

Left-to-right: 8 cm or less

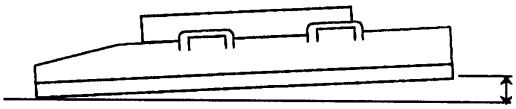

Front-to-back: 2 cm or less

(3) Precautions to be taken when storing the HIFIX

Dust and foreign matter may cause the HIFIX connector miss-contact.

① Prevent dust to the HIFIX connector for storage.

② When storing the HIFIX, place it on a flat surface so that the HIFIX connector is not damaged.

③ If the connector has dust or foreign matter, clean it with a brush (a tooth brush can be sufficient). If the foreign matter cannot be removed by a brush, use isopropyl alcohol and a brush to clean the contractor. At this time, be sure to rub only the stained part with the brush.
When cleaning the contact, never use a cotton swab, cloth, or paper that produces lint.

(4) Preventing dust on the test head

Dust collected on the pin card connectors also causes contact failure.

① Do not place articles (especially paper) on the test head to ensure that no foreign matter get into the connector. Inclusion of foreign matter also can cause the connector to break.

(5) Other caution

CAUTION!
The HIFIX and Test Head that have been used to perform the timing calibration must always be used together. In addition, when you use the set of calibration data, the HIFIX and the Test Head that have been used to create the set data must be used.

For the T6500 series, there are two rotary switches which are used to set a HIFIX serial number. The calibration file name consists of an identification code that includes the HIFIX serial number.

For more information on the calibration file name, refer to "T6500 Series Calibration Reference Manual."

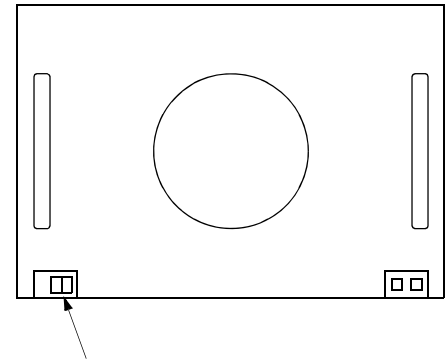

10. SPARE PARTS KIT

Spare Parts Kit A1

Name	Type Description	Quantity
SQPG	BPR-033286	1
CONTACT	BGS-026241	1

Spare Parts Kit A2

Name	Type Description	Quantity
STICK(T6575)	BIS-029043	1
Carrying case	KH9-91624	1

Spare Parts Kit A3

Name	Type Description	Quantity
STICK(T6565)	BIS-029043X02	1
Carrying case	KH9-91624	1

Spare Parts Kit A4

Name	Type Description	Quantity
STICK(T6535)	BIS-029043X03	1
Carrying case	KH9-91624	1

Spare Parts Kit A5

Name	Type Description	Quantity
PC64MW	BMS-029040	1
Carrying case	KH9-91624	1

Spare Parts Kit A6

Name	Type Description	Quantity
OPTION PG(ALPG&SCPG4GW)	BIR-027902	1

Spare Parts Kit A7

Name	Type Description	Quantity
OPTION PG(ALPG&SCPG16GW)	BIR-027902X02	1

Spare Parts Kit A8

Name	Type Description	Quantity
OPTION PG(DUMMY)	BGR-029053	1

Spare Parts Kit A9

Name	Type Description	Quantity
DCAP(64MW)+AFM	BIS-029044	1

Spare Parts Kit A10

Name	Type Description	Quantity
DCAP(64MW)	BIS-029044X02	1

Spare Parts Kit A12

Name	Type Description	Quantity
IDDQ DUMMY	BGS-026357	1

Spare Parts Kit A13

Name	Type Description	Quantity
IDDQ BOARD	WUN-T6500IDDQX02	1

Spare Parts Kit A19

Name	Type Description	Quantity
HSCLK OPTION	BIS-029624	1

Spare Parts Kit A20

Name	Type Description	Quantity
ADC/DAC BOARD (new)	BIS-027890	1

Spare Parts Kit B1

Name	Type Description	Quantity
DPU_IF	BGR-026245	1
UDC CONT	BGR-023712	1
UDC	BGR-023713X02	1
DPS CONT	BGR-024897	1
DPS	BGR-023715X03	1
MDC	BGR-023711X02	1

Spare Parts Kit B2

Name	Type Description	Quantity
BUS IF	BGR-026240	1

Spare Parts Kit B3

Name	Type Description	Quantity
40V PPS	BGR-026706	1
DPS MUX	BGR-029220	1

Spare Parts Kit C1

Name	Type Description	Quantity
MONITOR IF	BGR-024885X08	1

Spare Parts Kit C2

Name	Type Description	Quantity
EWS IF	BGC-027896	1
IO IF	BGR-027897	1

Spare Parts Kit D1

Name	Type Description	Quantity
DPU BPS1	WUN-11V4B18V	1

Spare Parts Kit D2

Name	Type Description	Quantity
DPU BPS2	WUN-11V2B5V2B3V	1

Spare Parts Kit D3

Name	Type Description	Quantity
TH BPS1	WUN-5V2R5V3B3VA	1

Spare Parts Kit D4

Name	Type Description	Quantity
TH BPS2	WUN-11V2R5V3V5V2BA	1

Spare Parts Kit D5

Name	Type Description	Quantity
TH BPS3	WUN-11V2R5V5V2R5V5A	1

10. SPARE PARTS KIT

Spare Parts Kit D6

Name	Type Description	Quantity
TH BPS4	WUN-11VDM3B2R5VA	1

Spare Parts Kit D7

Name	Type Description	Quantity
TH BPS5	WUN-11V2R5VDM3V5VA	1

11. MAINTENANCE PARTS

Item Name	Advantest Standard
Air filter for the main rack	KH9-910130
ACDC filter	KH9-9781
Air filter for test head	MPX-M0012A
Fan block for DPU unit	KH3-910021
Fan block for ACDC power supply	KH3-93545
AC fan block for test head	KH3-93818
Board handle mounted inside main unit frame	KH9-90287
Board handle mounted inside test head (LEFT)	MAE-J2209A
Board handle mounted inside test head (RIGHT)	MAE-J2207A
Jig used to install or remove Test Head board power supply	MBZ-L7823A
Accessories (TC6)	KH3-93594
Accessories (TC7)	KH3-910277

12. REPLACING PARTS

12.1 Test Head Air Coupler Replacement Procedure

(1) Turn off the system power. Turn off the main air supply for the system.

(2) Remove the HIFIX air connector A as shown in Figure 12-1.

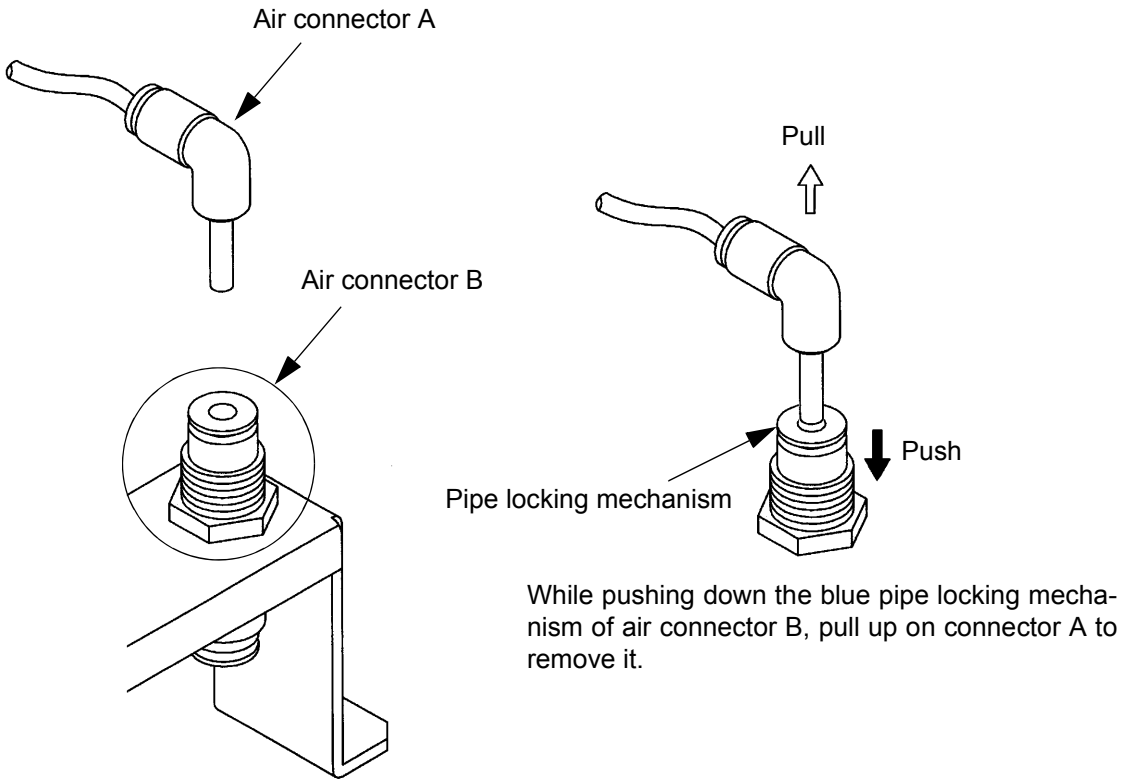

Figure 12-1 Air Connector A Removal

Note: ***Forcibly removing the connector without releasing the locking mechanism will result in damage to the connector.***

(3) Using a wrench, remove the nuts which secure the B air connectors. (Figure 12-2) Remove the screws (two of them) which secure the coupler base. Remove the coupler base from the test head.

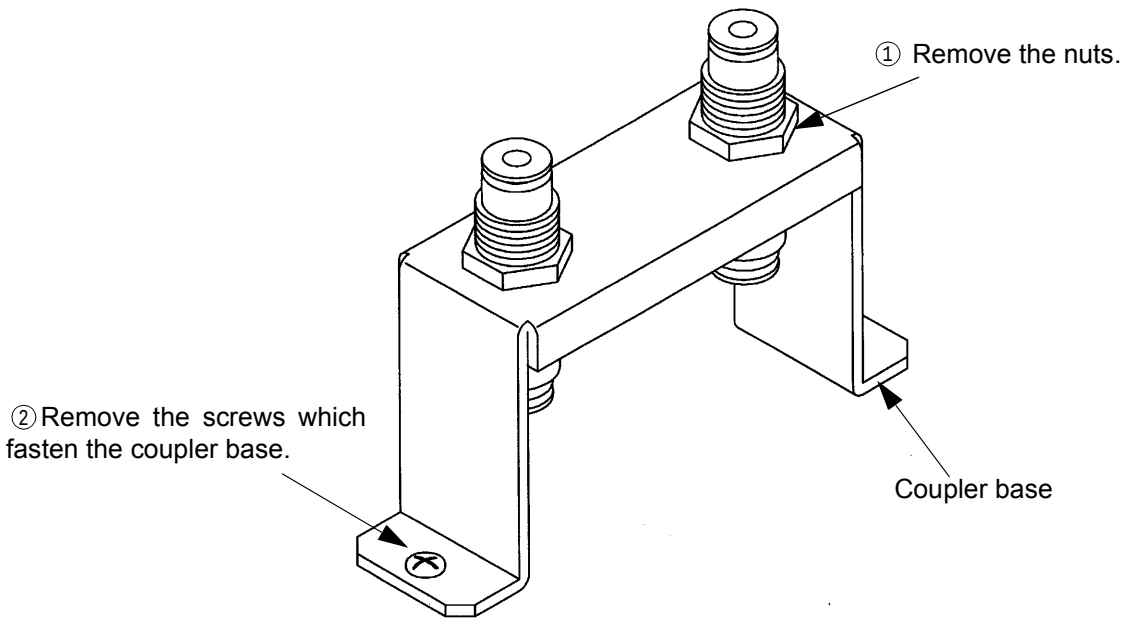

Figure 12-2 Air Connector B and Coupler Base Removal

(4) As shown in Figure 12-3, remove the couplers. One is attached to the transparent pipe and the other is attached to the black pipe.

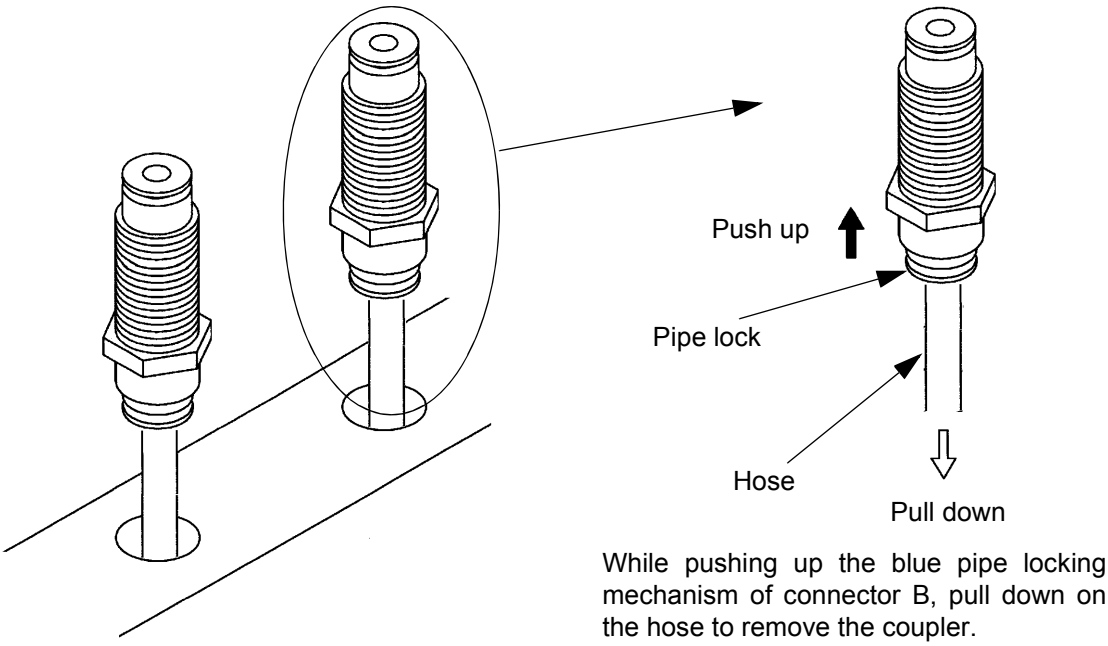

Figure 12-3 Coupler Removal

(5) Attach the replacement coupler to the hose.
(Firmly push the hose into the coupler until it is locked.)

(6) Perform procedure (3) in the reverse order to secure the coupler to the coupler base.

13. Product Disposal and Recycle

When disposing of the test system, follow the applicable waste-disposal laws and regulations that are established by municipality and country.

Before disposing of the test system, separate and collect the parts listed below to prevent any substances, which may harm the global environment, humans, and ecosystem, from being spread.

Name of part or material	Used or not used	Relevant unit/part	Unit	Part	Number of parts (full configuration)
Capacitor containing polychlorinated biphenyl (PCB)	Not used	-			
Parts containing mercury	Used	Controller	LCD monitor	Fluorescent tube	1
Battery	Used	Mainframe	WUN-H3610011 or WUN-H3610106	Lithium-ion battery	1
Printed board	Used	Mainframe	Board	Printed circuit board	12
			Power supply	Printed circuit board	13
		Test head	Board	Printed circuit board	14
		HIFIX	H3-93806X2	Printed circuit board	67
			H3-94021	Printed circuit board	65
			H3-93851	Printed circuit board	65
			H7-1138	Printed circuit board	221
		Performance board	DIAG PB CAL PB MANUAL PB	Printed circuit board	6
Toner cartridge	Not used	-			
Plastic containing brominated flame retardants	Used	Mainframe	BGC-027896	Tantalum capacitor, diode, power supply, and semiconductor (IC (ECL, CMOS transistor))	
			BGJ-029280		
			BGR-023711X02		
			BGR-023712		
			BGR-023713X02		
			BGR-023715X03		
			BGR-024885X08		
			BGR-024897		
			BGR-026240		
			BGR-026245		
			BGR-026706		
			BGR-027897		
			BGR-029053		
			BGS-026241		
			BGS-026357		
			BLB-018946		
			BLB-022416		
			BLB-025017X03		

13. Product Disposal and Recycle

Name of part or material	Used or not used	Relevant unit/part	Unit	Part	Number of parts (full configuration)
Plastic containing brominated flame retardants	Used	Mainframe	BLC-021053X02	Tantalum capacitor, diode, power supply, and semiconductor (IC (ECL, CMOS transistor))	
			BLC-021056		
			BLD-019706		
			BLK-021054X02		
			BLL-023066		
			KH3-110006		
			KH3-5169		
			KH3-5169X03		
			KH3-71262		
			KH3-910022		
			WBL-BPS11V36AX02		
			WBL-BPS18V22A		
			WBL-BPS2R5V80AX02		
			WBL-BPS3R3V80AX02		
			WBL-BPS5V80A		
			WBL-BPS5V80AX02		
			WBL-H36746BBLK		
			WBL-PS3750WX02		
			WFU-R6581TE		
		Test head	BGR-029220		
			BIR-027900		
			BIS-029043		
			BIS-029043X02		
			BIS-029043X03		
			BLF-024309X03		
			BLF-024309X05		
			BMS-029040		
			KH3-010007		
			KH3-93816		
		HIFIX	KH3-93852		
			KH3-93892X02		
			KH3-94022		
			KH7-7502		
Asbestos and parts containing asbestos	Not used	-			
Cathode-ray tube	Not used	-			
Chlorofluorocarbon (CFC), hydrochlorofluorocarbon (HCFC), hydrofluorocarbon (HFC), or hydrocarbon (HC)	Not used	-			

Name of part or material	Used or not used	Relevant unit/part	Unit	Part	Number of parts (full configuration)
Discharge lamp	Not used	-			
Liquid crystal display of 100 cm^2 or larger	Used	Controller	LCD monitor	Liquid crystal display	1
External electric cables	Used	Mainframe		Power cable	1
		Between mainframe and test head		Power cable	61
				Signal cable	16
		Between mainframe and controller		Power cable	1
				Signal cable	2
Parts containing refractory ceramic fiber	Not used	-			
Parts containing radioactive materials	Not used	-			
Electrolytic capacitor containing hazardous substances (Height >25 mm, diameter >25 mm, or the same volume)	Not used	-			
Lead and lead compound	Used	Mainframe	BGC-027896	Electronic parts on the print board and solder	
			BGJ-029280		
			BGR-023711X02		
			BGR-023712		
			BGR-023713X02		
			BGR-023715X03		
			BGR-024885X08		
			BGR-024897		
			BGR-026240		
			BGR-026245		
			BGR-026706		
			BGR-027897		
			BLD-019706		
			KH3-110006		
			KH3-5158		
			KH3-5169		
			KH3-5169X03		
			KH3-71093		
			KH3-71150		
			KH3-71262		
			KH3-910019		
			KH3-910020		
			KH3-910021		
			KH3-910022		
			KH3-910176		
			KH3-910180		

Name of part or material	Used or not used	Relevant unit/part	Unit	Part	Number of parts (full configuration)
Lead and lead compound	Used	Mainframe	KH3-910182	Electronic parts on the print board and solder	
			KH3-910277		
			KH3-910400		
			KH3-93545		
			KH3-93594		
			KH3-94091		
			KH9-110010		
			KH9-1375		
			KH9-810011		
			KH9-810015		
			KH9-910053		
			KH9-91609		
			KH9-91623		
			WBL-6581*M		
			WBL-DESKCOM		
			WBL-H3610034		
			WBL-H3610035		
			WBL-H36690		
			WBL-H36691		
			WBL-H36746BBLK		
			WBL-H36795		
			WBL-H91262		
			WBL-PS3750WX02		
			WBL-V0105C		
			WFU-R6581TE		
			WHB-THD140		
			WUN-H3610011		
			WUN-H3610012		
			WUN-H3610106		
			WUN-H36871		
			WUN-V0108A		
		Test head	BGR-029045		
			BGR-029053		
			BGR-029220		
			BGS-026241		
			BGS-026357		
			BIR-027900		
			BIR-029043		
			BIR-029043X02		
			BIR-029043X03		
			BLB-018946		

Name of part or material	Used or not used	Relevant unit/part	Unit	Part	Number of parts (full configuration)
Lead and lead compound	Used	Test head	BLB-022416	Electronic parts on the print board and solder	
			BLB-025017X03		
			BLC-021053X02		
			BLC-021056		
			BLF-024309X03		
			BLF-024309X05		
			BLJ-021166X02		
			BLK-021054X02		
			BLL-023066		
			BMS-029040		
			KH3-010007		
			KH3-910023		
			KH3-910178		
			KH3-93232		
			KH3-93490X03		
			KH3-93816		
			KH3-93818		
			KH3-93828		
			KH9-1373		
			KH9-910041		
			KH9-910217		
			KH9-91527		
			KH9-91528		
			KH9-91529		
			KH9-91533		
			KH9-91589		
			KH9-91813		
			WBL-BPS11V36A		
			WBL-BPS11V36AX02		
			WBL-BPS18V22A		
			WBL-BPS2KFIN		
			WBL-BPS2KFINA		
			WBL-BPS2R5V80AX02		
			WBL-BPS3R3V80A		
			WBL-BPS3R3V80AX02		
			WBL-BPS5V80A		
			WBL-BPS5V80AX02		
			KH3-93852		
			KH3-93892X02		
			KH3-94022		

13. Product Disposal and Recycle

Name of part or material	Used or not used	Relevant unit/part	Unit	Part	Number of parts (full configuration)
Lead and lead compound	Used	HIFIX	KH7-7502	Electronic parts on the print board and solder	
			KH7-83548		
			KH9-910218		
			KH9-91514		
			KH9-91514X02		
			KH9-91577		
		Performance board	BIM-029469		
			BIS-027575		
			BLS-026219		
			BLS-026776		
			BLS-029655		
			BLS-030058		
Polyvinylchloride (PVC)	Used	Mainframe		PVC-material resin parts	
		Test head			
Arsenic and arsenic compound	Used	Mainframe	Electronic parts	GaAs IC	3874
		Test head			
		Controller			
Antimony and antimony compound	Used	Mainframe		Electronic parts	Semiconductor parts
		Test head			
		Controller			
Beryllium and beryllium compound	Used	Mainframe			
		Test head			
		Controller			
Bismuth and bismuth compound	Used	Mainframe			
		Test head			
		Controller			
Phthalate ester	Used	Mainframe			
		Test head			
		Controller			

APPENDIX 1. MAINTENANCE OF AIR COMPRESSOR PANEL UNIT

Standard name: AAT-AIRCONT

A1.1 Air Pressure Setting

(1) Connect the air source to the hi-coupler (YEE-001065) and introduce air at a pressure of approximately 49×10^4 Pa.

(2) Adjust the regulator meter to approximately 49×10^4 Pa using the valve.

A1.2 Air Compressor Panel Cable Connection

(1) During maintenance

Connect the short contact connector (DCB-RR9786X01) into J5 (TH1) and J6 (TH1).

Remark: The AAT-AIRCONT has a maintenance switch.

WARNING!
If there is no short contact connector to connect to J5 and J6, turn switch 1 of maintenance switch (S1) on. This places the unit in maintenance mode. Since the air compressor panel board has its safety circuit disabled, be sure to turn the maintenance switch (S1) off after you finished maintenance work.

(2) Connecting peripheral equipment with cable

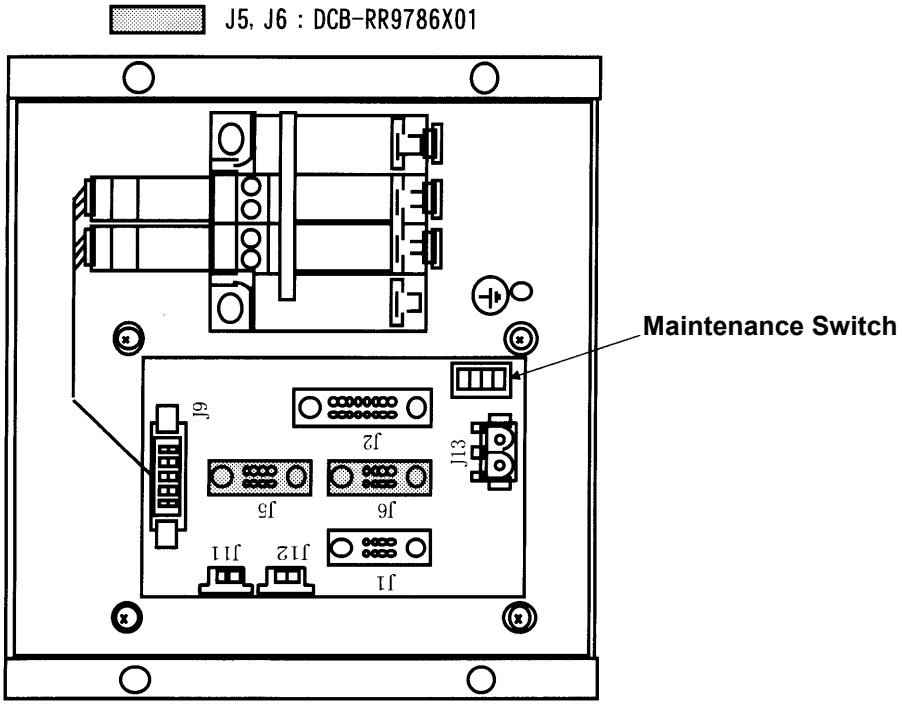

Figure A1-1 AIR CONTROL UNIT

The short contact connectors (DCB-RR9786X01) are connected to J5 and J6 as standard. Connect the prober control cable to the appropriate terminals depending on the types of the prober and HIFIX as shown in Table A1-1.

When connecting cables to a shaftlock-method prober, refer to “REMOTE BOX OPERATION MANUAL.”

Table A1-1 Prober Control Cable Connection

Air Compressor Panel Terminals Number		J5	J6
Turnover-method Prober	512 ch HIFIX	Prober TH1	Short Contact Connector
	1024 ch HIFIX	Short Contact Connector	Prober TH1
Shaftlock-method Prober		Short Contact Connector	Prober TH1

APPENDIX 2. PC CHANNEL ASSIGNMENT TABLE

Odd side | Even side

	385-416,449-480		257-288,321-352		129-160,193-224		1-32,65-96			33-64,97-128		161-192,225-256		289-320,353-384		417-448,481-512	
	PC7		PC5		PC3		PC1			PC2		PC4		PC6		PC8	
	Slot13		Slot12		Slot11		Slot10			Slot9		Slot8		Slot7		Slot6	
	Side-A	Side-B	Side-A	Side-B	Side-A	Side-B	Side-A	Side-B		Side-A	Side-B	Side-A	Side-B	Side-A	Side-B	Side-A	Side-B
	Pin #	Pin #	Pin #	Pin #	Pin #	Pin #	Pin #	Pin #		Pin #	Pin #	Pin #	Pin #	Pin #	Pin #	Pin #	Pin #
1	449	385	321	257	193	129	65	1		121	57	249	185	377	313	505	441
2	450	386	322	258	194	130	66	2		122	58	250	186	378	314	506	442
3	451	387	323	259	195	131	67	3		123	59	251	187	379	315	507	443
4	452	388	324	260	196	132	68	4		124	60	252	188	380	316	508	444
5	453	389	325	261	197	133	69	5		125	61	253	189	381	317	509	445
6	454	390	326	262	198	134	70	6		126	62	254	190	382	318	510	446
7	455	391	327	263	199	135	71	7		127	63	255	191	383	319	511	447
8	456	392	328	264	200	136	72	8		128	64	256	192	384	320	512	448
9	457	393	329	265	201	137	73	9		113	49	241	177	369	305	497	433
10	458	394	330	266	202	138	74	10		114	50	242	178	370	306	498	434
11	459	395	331	267	203	139	75	11	TH	115	51	243	179	371	307	499	435
12	460	396	332	268	204	140	76	12		116	52	244	180	372	308	500	436
13	461	397	333	269	205	141	77	13	CE	117	53	245	181	373	309	501	437
14	462	398	334	270	206	142	78	14	NT	118	54	246	182	374	310	502	438
15	463	399	335	271	207	143	79	15	ER	119	55	247	183	375	311	503	439
16	464	400	336	272	208	144	80	16		120	56	248	184	376	312	504	440
17	465	401	337	273	209	145	81	17		105	41	233	169	361	297	489	425
18	466	402	338	274	210	146	82	18		106	42	234	170	362	298	490	426
19	467	403	339	275	211	147	83	19		107	43	235	171	363	299	491	427
20	468	404	340	276	212	148	84	20		108	44	236	172	364	300	492	428
21	469	405	341	277	213	149	85	21		109	45	237	173	365	301	493	429
22	470	406	342	278	214	150	86	22		110	46	238	174	366	302	494	430
23	471	407	343	279	215	151	87	23		111	47	239	175	367	303	495	431
24	472	408	344	280	216	152	88	24		112	48	240	176	368	304	496	432
25	473	409	345	281	217	153	89	25		97	33	225	161	353	289	481	417
26	474	410	346	282	218	154	90	26		98	34	226	162	354	290	482	418
27	475	411	347	283	219	155	91	27		99	35	227	163	355	291	483	419
28	476	412	348	284	220	156	92	28		100	36	228	164	356	292	484	420
29	477	413	349	285	221	157	93	29		101	37	229	165	357	293	485	421
30	478	414	350	286	222	158	94	30		102	38	230	166	358	294	486	422
31	479	415	351	287	223	159	95	31		103	39	231	167	359	295	487	423
32	480	416	352	288	224	160	96	32		104	40	232	168	360	296	488	424

APPENDIX 3. PHOTOELECTRIC SMOKE DETECTION SYSTEM

A3.1 Maintenance for Environmental Processor

- Turn the receiver off and set the number of smoke sensors connected to the receiver using the DETECTOR NUMBERS knobs.

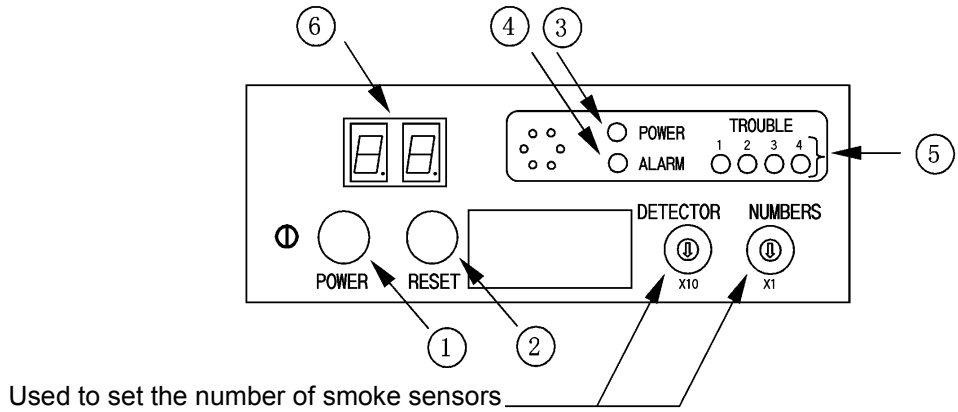

① POWER SW : Turns the detector system on or off.

② RESET SW : Resets smoke sensors which have caused alarms.

③ POWER Light : Turns on when the power is turned on.

④ ALARM Light : Turns on when smoke is detected.

⑤ TROUBLE Light : Turns on when a problem such as a wiring break occurs. (Refer to the Section A3.4, ”Workaround List.”)

⑥ 7-segment LED indicator:
The address of a smoke sensor with which an alarm or problem has been detected.

- When the POWER switch is turned on, the ALARM and TROUBLE lights turn on in the order and the receiver is initialized for approximately one minute.
- After that, check that the ALARM and TROUBLE lights turn off.
- Be sure to turn the POWER switch off more than one minute after the switch was turned on. When the ALARM light turns on, an alarm sounds continuously. When TROUBLE lights are on, a beeping sound is activated.
- The sensor where the same address is assigned cannot be connected to the same receiver. (You can randomly assign the address number to sensors without duplicating an address.)
- Do not connect a terminator to the end of every smoke sensor.

A3.2 Smoke Sensor Specifications

Normal Operation: The sensor LED turns on every ten seconds.

Alarm Condition: The sensor LED turns on every two seconds.

Abnormal Condition: The sensor LED does not turn on.

Note: Alarms occur when smoke is detected.

A3.3 Smoke Detection System Block Diagram

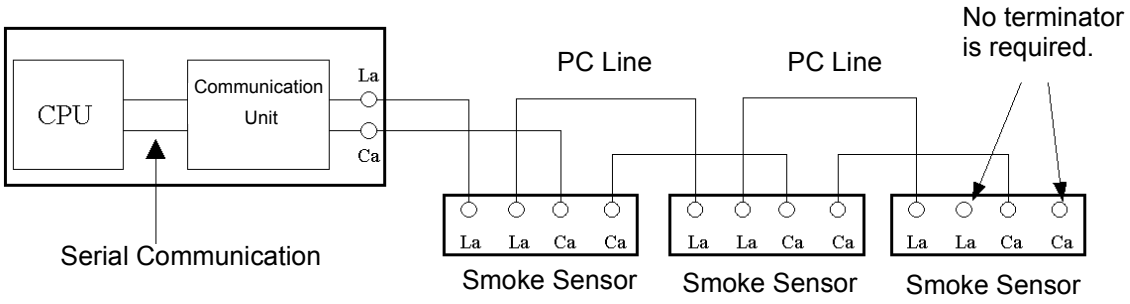

A3.4 Workaround List

A3.4.1 What to Do When a Problem Occurs

Receiver power indicator	TROUBLE indicator positions	Smoke sensor LED	Problem description	Suggested Courses of Action
ON	Position 1 is lit.	OFF	• The power may be abnormal on a PC line. • The smoke sensor voltage may drop to less than 9 V. • The smoke sensor test failure • A write error may have occurred in the smoke sensor EEPROM. • The smoke sensor sensitivity may be inferior to its specification.	Replace the sensor if it is defective.
	Position 2 is lit.	ON	If the number of sensors recognized by the receiver exceeds the number of sensors specified by the detector number switch assembled in the receiver.	Change the setting to the current number of smoke sensors.
	Position 3 is lit.		• The number of smoke sensors the receiver identifies is smaller than the setting in DETECTOR NUMBERS. • PC lines may be broken. • The smoke sensor is disconnected.	• Change the setting to the current number of smoke sensors. • Make sure that the PC lines are connected to the terminals of the receiver correctly. • Make sure that the PC lines are connected to the terminal of each smoke sensor correctly. • Check to see if any PC lines are broken. • Make sure that the smoke sensors are properly attached to each base correctly.
	Positions 2 and 3 are lit.	OFF	PC lines short-circuited.	Wire PC lines correctly.

Receiver power indicator	TROUBLE indicator positions	Smoke sensor LED	Problem description	Suggested Courses of Action
ON	Position 4 is lit.	ON	• The value set in the detector number switch (in the receiver) is 0. • The value set in the detector number switch (in the receiver) is 32 or more. • Alarm error • Write error at the receiver EEPROM	• Confirm the value set in the detector number switch. • Replace the receiver if it is defective.
			• The receiver accepted alarm signal from more than four sensors. However, the amount of smoke detected was not high enough to activate an alarm. If this occurred, TROUBLE lights 1, 2 and 3 blink.	If this occurs, please contact ADVANTEST.
	Positions 1 thru 4 are blinking.	OFF	• Though the receiver accepted an alarm signal from a sensor, the beeper did not sound and the internal TROUBLE relay does not open because the amount of smoke detected was not high enough to activate an alarm.	If this occurs, please contact ADVANTEST.
Blinking	OFF		Receiver CPU error	Replace the receiver if it is defective.

CAUTION!

1. ***Contact an ADVANTEST service representative if the above actions do not fix the problem.***
2. ***Make sure that the power switch has been turned off when reconnecting a receiver or sensor, or replacing a sensor.***

APPENDIX 4. LCD MONITOR SETUP

A4.1 Setup for V0108A (TOTOKU 15-inch LCD Monitor)

A4.1.1 TC6/TC7 Setup

(1) Shut down the TC6/TC7. The TC6/TC7 enters the ok prompt state.

(2) Enter the command as shown below. Note that the "↵" mark represents the return key, and an underlined part represents a command.

(a) For TC6

```
ok setenv output-device screen:r1024x768x70↵
```

(b) For TC7

```
ok setenv output-device screen:r1024x768x60↵
```

(3) Make sure that "output-device" is set using the printenv command.

(4) Enter the command as shown below to restart the TC6/TC7.

```
ok reset-all↵
```

A4.1.2 Location of the Screen Setting Buttons

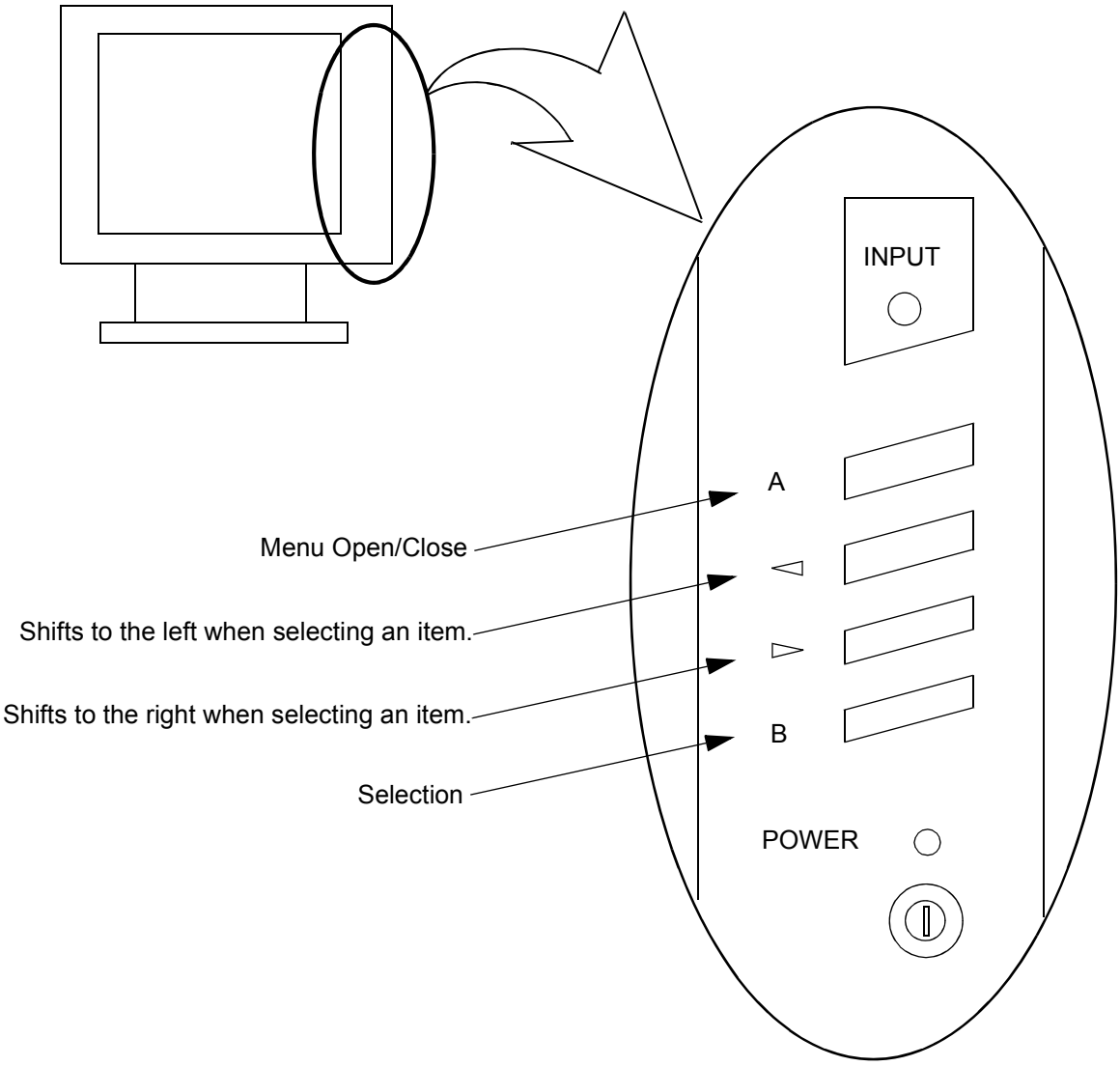

Figure A4-1 Location of the LCD Monitor Setup Buttons

A4.1.3 Screen Adjustment

(1) Press the “A” button.

(2) Select the screen shown below in the MENU screen.

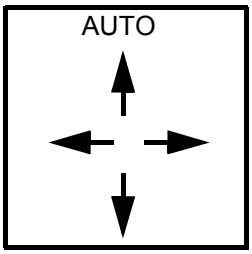

(3) Perform AUTO ADJUST using the ◁ or ▷ key.

Note: Perform AUTO ADJUST while TC6/TC7 is in the ok prompt state.

A4.2 Setup for SYNC MASTER 912T (SAMSUNG 19-inch LCD Monitor)

A4.2.1 Turning on the SYNC MASTER 912T Power

(1) Press the ⏻ button on the front.

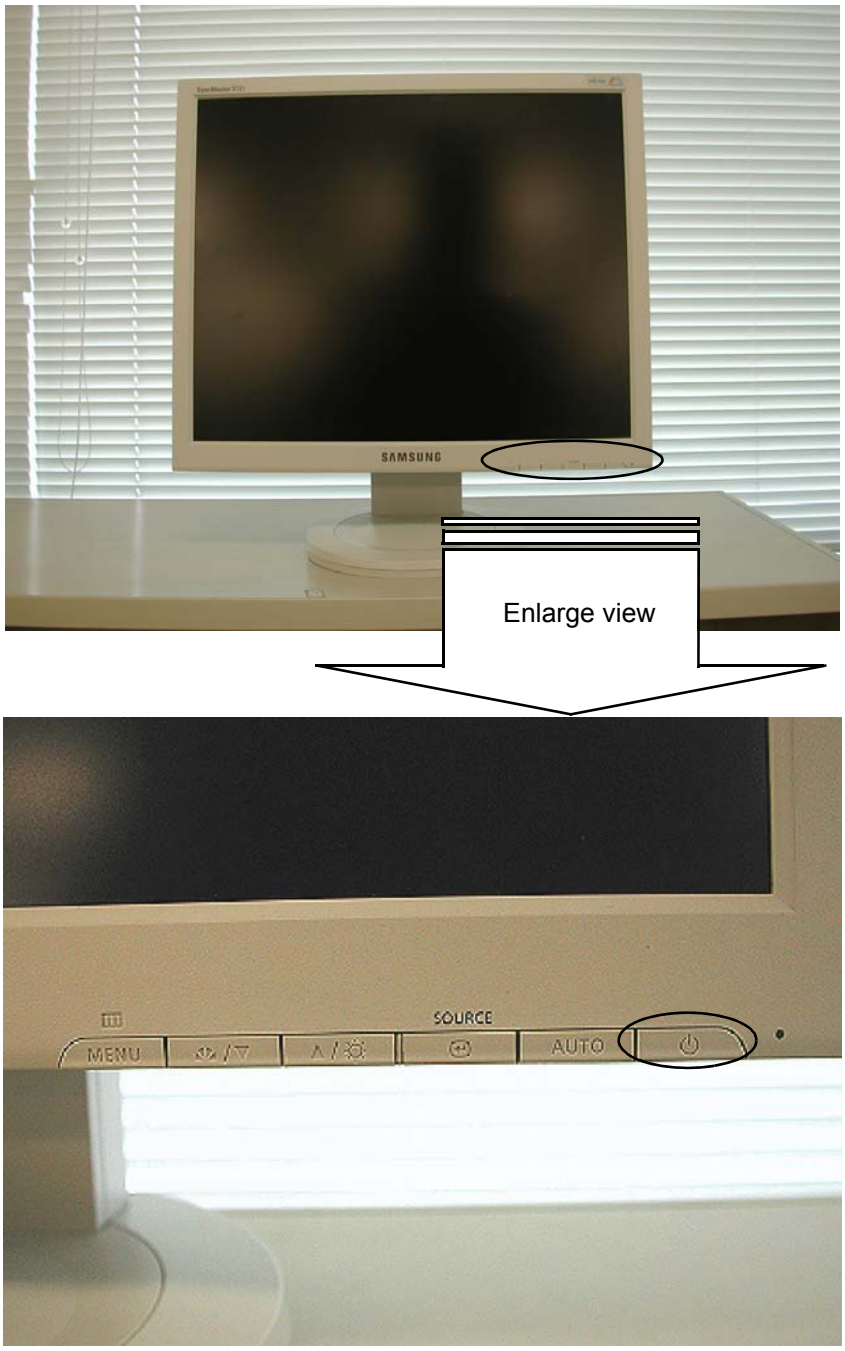

A4.3 Setting the Resolution

(1) The ok prompt should be displayed on the TC monitor.

(2) Ensure that “screen” is specified as the output-device setting by using the printenv command.

```
ok printenv output-device↵
output-device   =     screen
```

If “screen” is not specified as the output-device, enter the following command to specify “screen.”

If “screen” is specified, skip (3) and (4), and perform (5).

```
ok setenv output-device screen↵
```

(3) Enter the following command to enable the setting:

```
ok reset-all↵
```

(4) The ok prompt is displayed again.

(5) Press the Auto button of the LCD monitor.

APPENDIX 5. DISK STORAGE JUMPER SETTING

A5.1 AHN-DK32DJ*36 and AHN-DK32EJ*36

DK32DJ or DK32EJ is printed on the HDA (top).

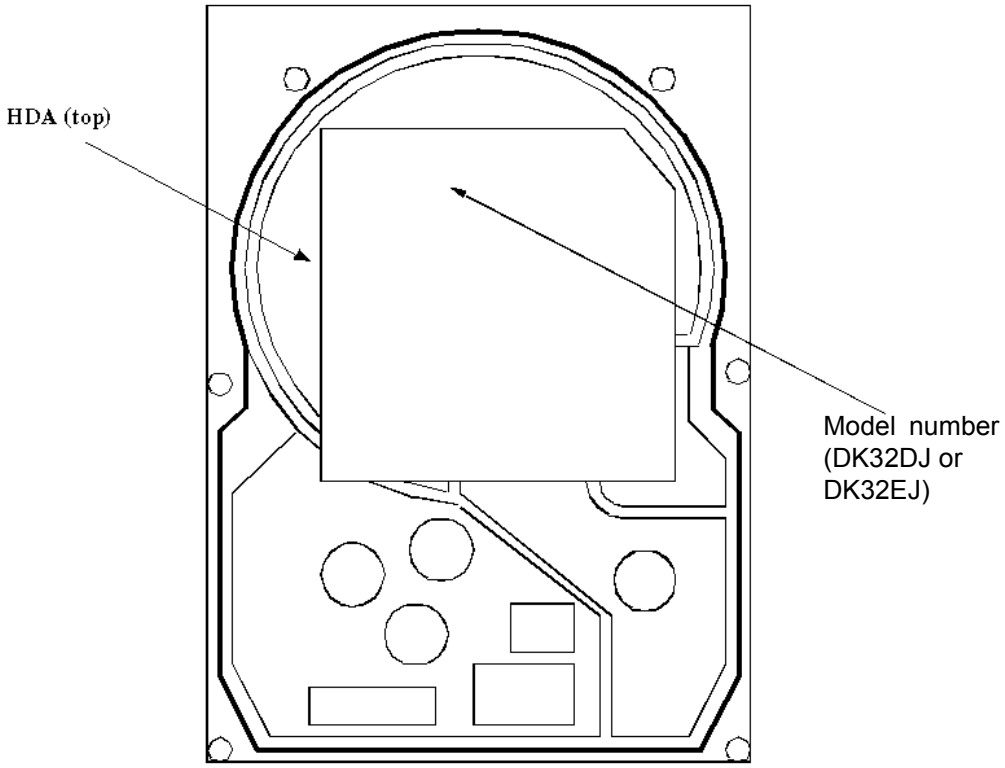

Figure A5-1 Hard Disk Top View

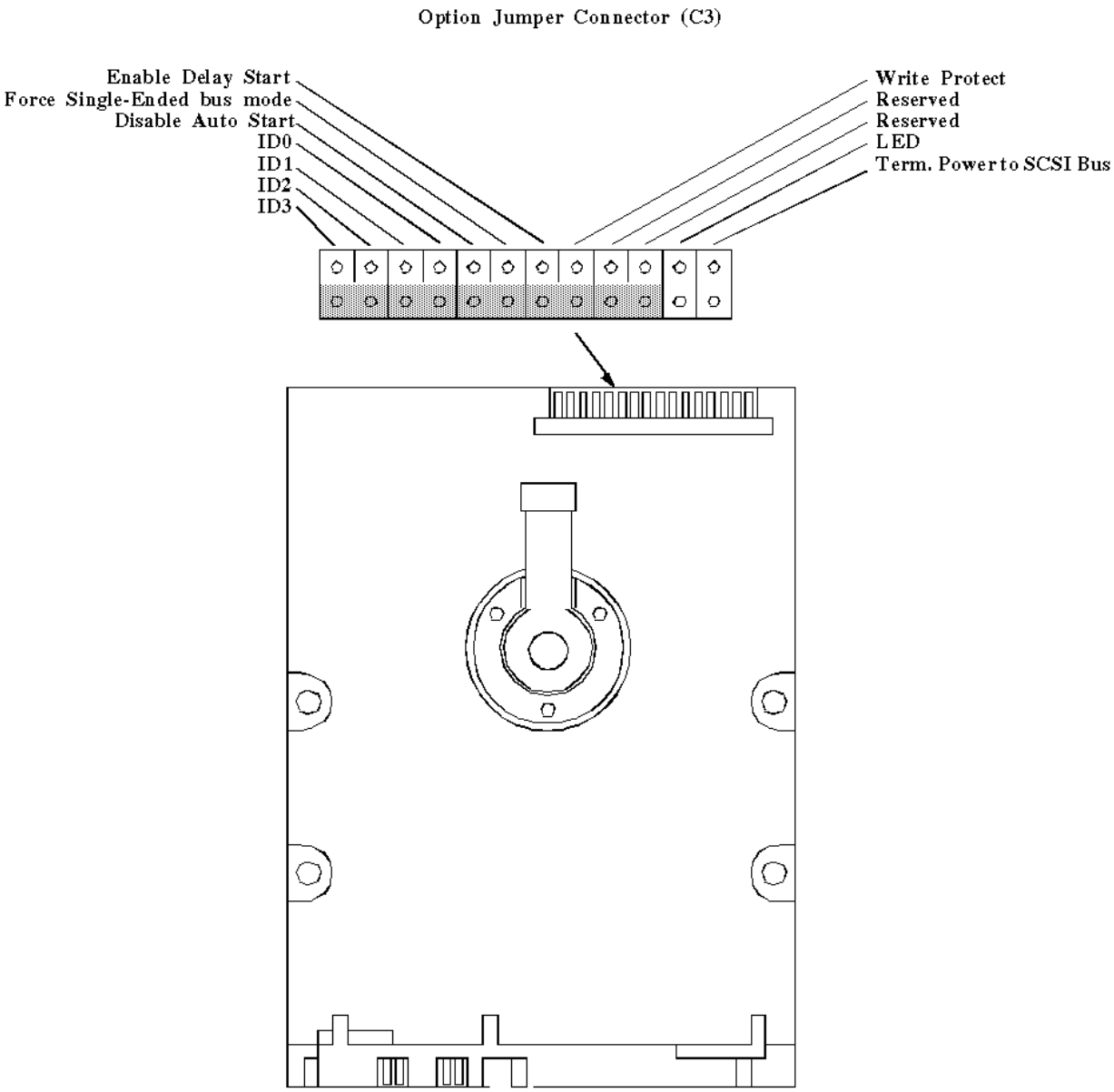

Figure A5-2 Hard Disk Bottom View

Storage mini jumper setting table

HD1	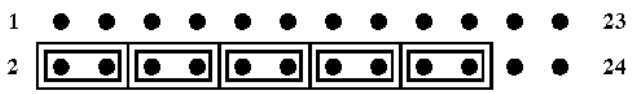
HD2	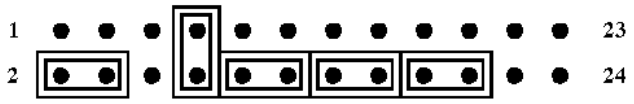

Figure A5-3 Mini Jumper Setting

A5.2 WBL-H3610190BLK

"MAT3073NP" is printed on the HDA (top).

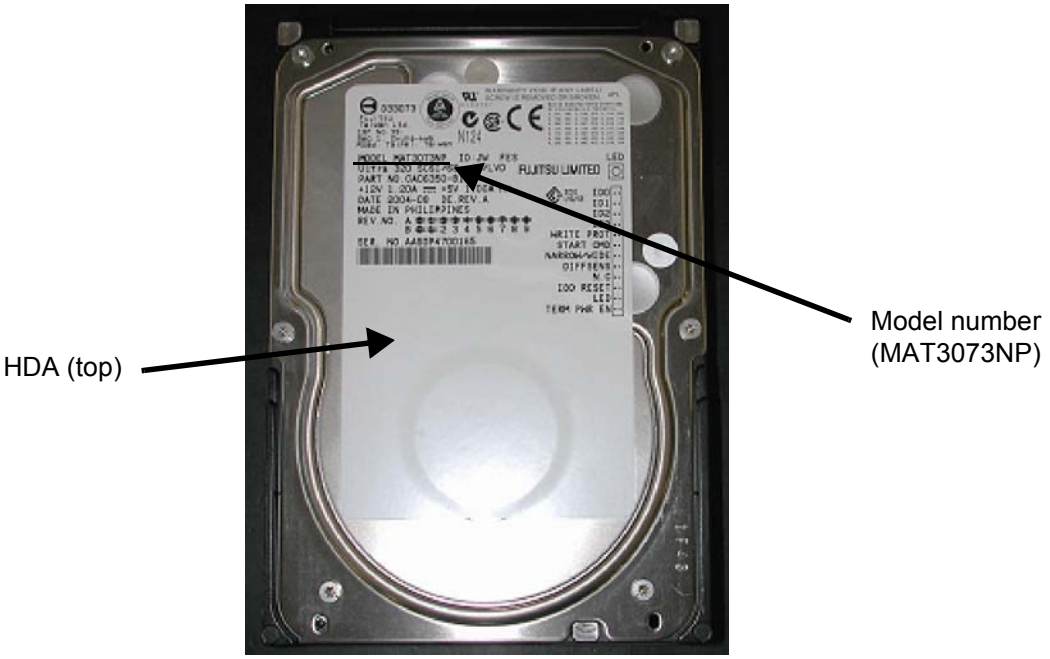

Figure A5-4 Hard Disk Top View

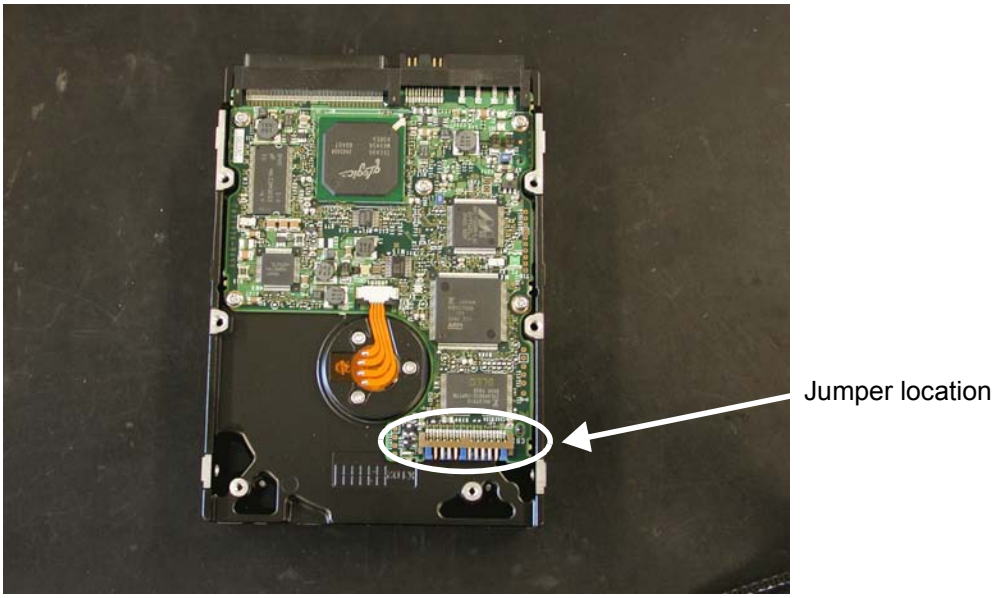

Figure A5-5 Jumper Location

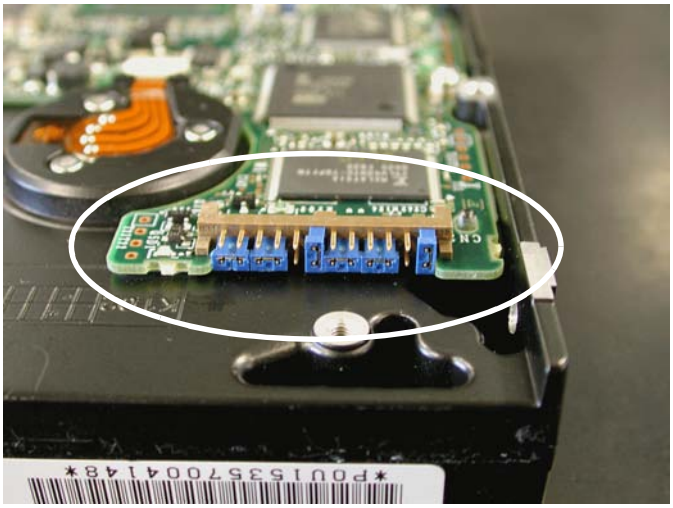

Figure A5-6 Jumper

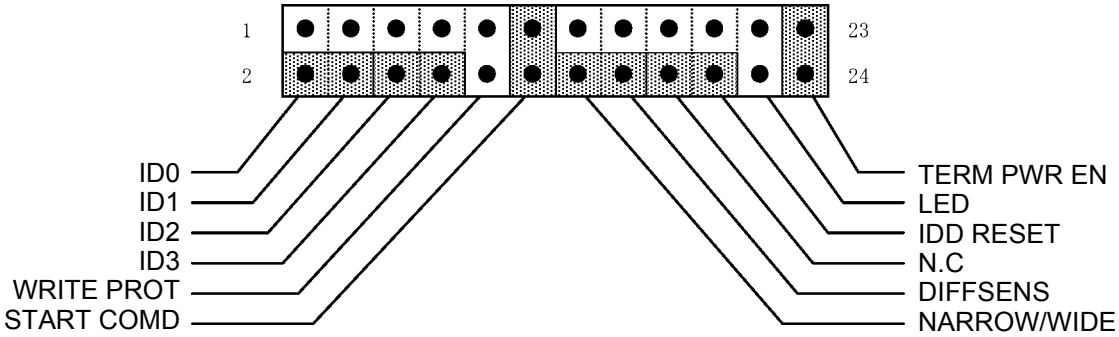

Figure A5-7 Jumper Pin Locations and Default Values

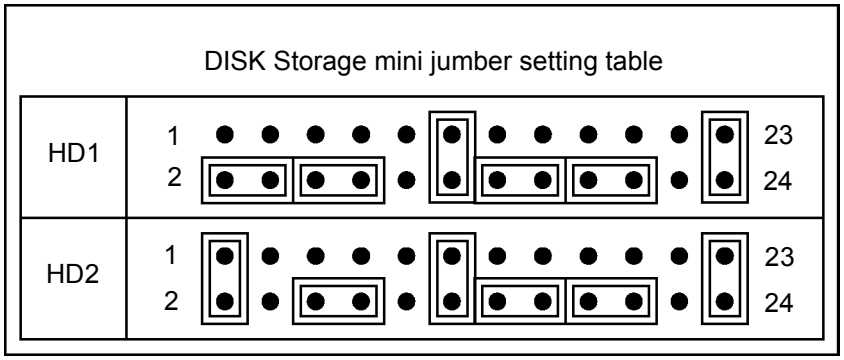

Note: HD2 cannot be mounted in TC3.

Figure A5-8 Mini Jumper Setting

APPENDIX 6. HOW TO USE TC7 CD-RW

A6.1 Notes on Using CD-RW

(1) Write to the CD-RW as a root user (super user). A non-root user cannot write to the CD-RW package which is included in the TC7.

(2) Use an ISO-formatted CD-RW. DirectCD-formatted CD-RW cannot be used.

(3) When using non-blank media, delete the session that was written most recently. To delete the session, use the following command.

Only a root user (super user) can delete the session.

```
# cdrw -b session
```

The time taken to delete the session varies depending on the size of the data deleted. (It takes approximately several minutes to delete 1 MB of data.)

A6.2 How to Use a CD-RW

Note: ***The user is described as vpoint and the directory is described as backup in this section.***

(1) Creating a directory

Log in as the vpoint user to create a backup directory.

```
% mkdir backup
```

(2) Back up the file to the backup directory.

(3) Log in to back up the file.

Enter the appropriate command shown below and write data to the media. Note that different commands are used according to the size of the back up media.

(a) Use the following command to back up onto a 650-MB CD-RW:

```
# mkisofs -r /home/vpoint/backup | cdrw -i
```

(b) Use the following command to back up onto a 700-MB CD-RW:

```
# mkisofs -r /home/vpoint/backup | cdrw -i -C
```

APPENDIX 7. NOTES AND SOLUTIONS THAT SHOULD BE TAKEN WHEN THE TC7 IS REPLACED

A7.1 The Error that Occurs when Solaris Starts after the TC7 Is Replaced

If the TC7 and the graphic card are replaced, the following error message is sometimes displayed instead of the DT log in screen when the test system power is turned on and Solaris starts:

```
*****************************************************************
*
* Starting Desktop Login on display :0...
*
* Wait for the Desktop Login screen before logging in.
*
*****************************************************************

*****************************************************************
*
* The X-sever can not be started on display :0...
*
*****************************************************************
```

This problem occurs because the graphic card mounted in the new TC7 is different from the graphic card mounted in the old TC7.

If this problem occurs, the CDE does not start but logging-in as a normal user or root user is possible.

The following describes the causes of this problem and the solutions:

(1) The Solaris device tree has not been updated because no boot -r command was executed when Solaris started after the TC7 was replaced.

For more information on updating the device tree, refer to method 1 in Section A7.3, “Solutions.” However, if Viewpoint OS R8.00 or R8.01 is used, refer to method 2 or 3 in Section A7.3, “Solutions.”

(2) The device driver for the graphic card that is mounted in the new TC7 has not been installed.

For more information on updating the device driver, refer to method 2 or 3 in Section A7.3, “Solutions.”

A7.2 Graphic Card

To judge whether the graphic cards which are mounted in the two TC7s are different, check the version of each TC7, which is described on the seal in the upper-left corner of the front of the TC7, or compare the shapes of the connectors.

The following shows the different versions and connectors of the two TC7s:

(a) If the version is AAB or ABB:

The graphic card: XVR-100

(b) If the version is neither AAB nor ABB:

The graphic card: XVR-500

A7.3 Solutions

In the following description, underlines indicate that commands are entered by the user and ↵ indicates the return key is pressed.

Method 1: Updating the device tree

If the Viewpoint revision is either R8.00 or R8.01, refer to method 2 or 3, because these revisions are incompatible with both types of graphic card and method 1 cannot be used.

(1) Press the return key. The console input screen is output.

```
*******************************************************************
*
* Starting Desktop Login on display :0...
*
* Wait for the Desktop Login screen before logging in.
*
*******************************************************************

*******************************************************************
*
* The X-sever can not be started on display :0...
*
*******************************************************************
                                          ← Press the return key at this point.

console login:
```

(2) Log in as a root user and enter the following commands: ******** indicates a password.

```
console login : root↵
passwd : ********↵

    :
    :

#  reboot -- -r↵
```

Method 2: Replacing the graphic card

Replace the graphic card in the TC7 with the one in the new TC7. If the TC7 is replaced because the graphic card is faulty, refer to method 3.

Method 3: Installing the device driver for the graphic card

(1) Prepare the CD (Solaris8 HW 5/03 1 of 2) for Solaris OS.

(2) Log in as a root user and insert the CD into the CD drive. For more information on how to log in as a root user, refer to method 1.

(3) Enter the following command to install the device driver.

If the TC7 version is AAB or ABB:

```
#  pkgadd -d /cdrom/cdrom0/s0/Solaris_8/Product SUNWpfbcf SUNWpfbmn SUNWpfbw
                                                                  SUNWpfbx.u↵

       :
       :
In response to all questions that are displayed after this, enter "y↵".
```

If the TC7 version is neither AAB nor ABB:

```
#  pkgadd -d /cdrom/cdrom0/s0/Solaris_8/Product SUNWifb.u SUNWifbcf
                                        SUNWifbr SUNWifbw SUNWifbx.u↵

       :
       :
In response to all questions that are displayed after this, enter "y↵".
```

(4) Remove the CD from the CD drive.

(5) To apply the installed driver, enter the following command and re-start the TC.

```
#  reboot -- -r↵
```

APPENDIX 8. HOW TO DRAIN THE FILTER REGULATOR

A8.1 Removing the AIR CONTROL UNIT and Air Control Meter Unit

(1) Turn off the system power.
Turn off the main air supply for the system.

(2) Open the MF rear cover and remove the three screws (shown in Figure A8-1, ①).
If any unit is attached to location ②, remove the screw.
(The unit at location ② may not be attached.)

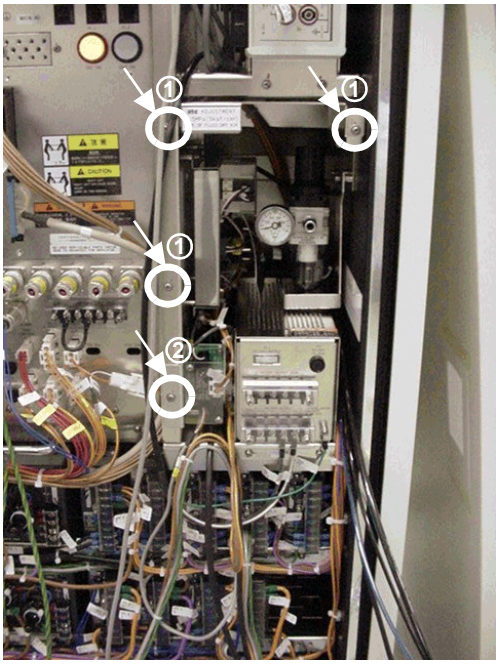

Figure A8-1 Removing the Screws

(3) Remove AIR CONTROL UNIT and air control meter units and put them in a vat as shown in Figure A8-2 so as not to spill the water.
At this time, be careful not to touch the filter regulator drain valve.
If the valve is handled carelessly, the water may leak into the MF unit.
In addition, be careful not to damage the cables and hoses when handling them.

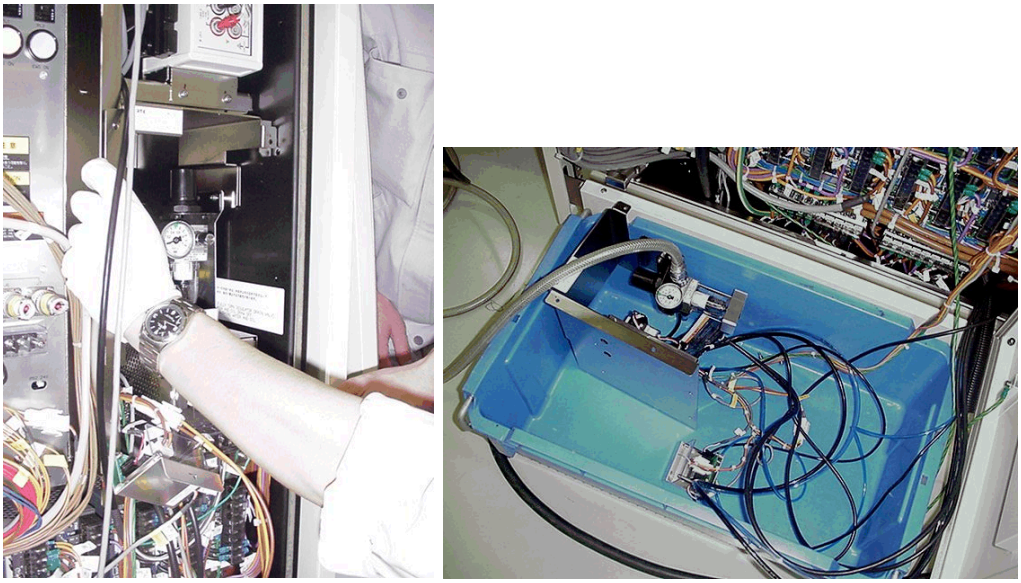

Figure A8-2 Removing Units

A8.2 Draining the Filter Regulator

(1) Loosen the filter regulator drain valve to drain the collected water as shown in Figure A8-3.

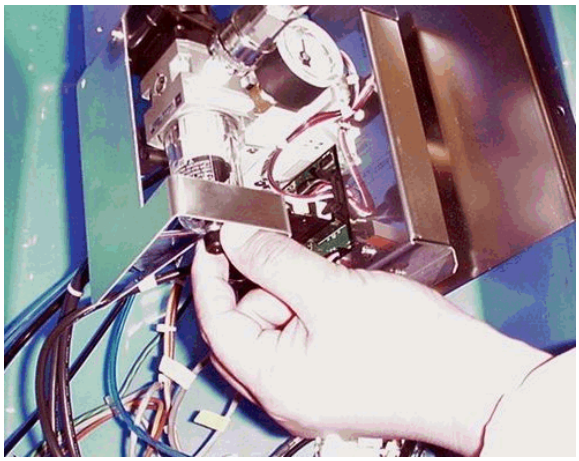

Figure A8-3 Draining

(2) Tighten up the valve as before after draining is completed. Wipe off the remaining water with a cloth.

Note: ***Be sure to tighten up the valve completely.***

(3) Attach the units to MF as before in the reverse order of the removal procedure.
After the units are attached, close the MF rear cover.