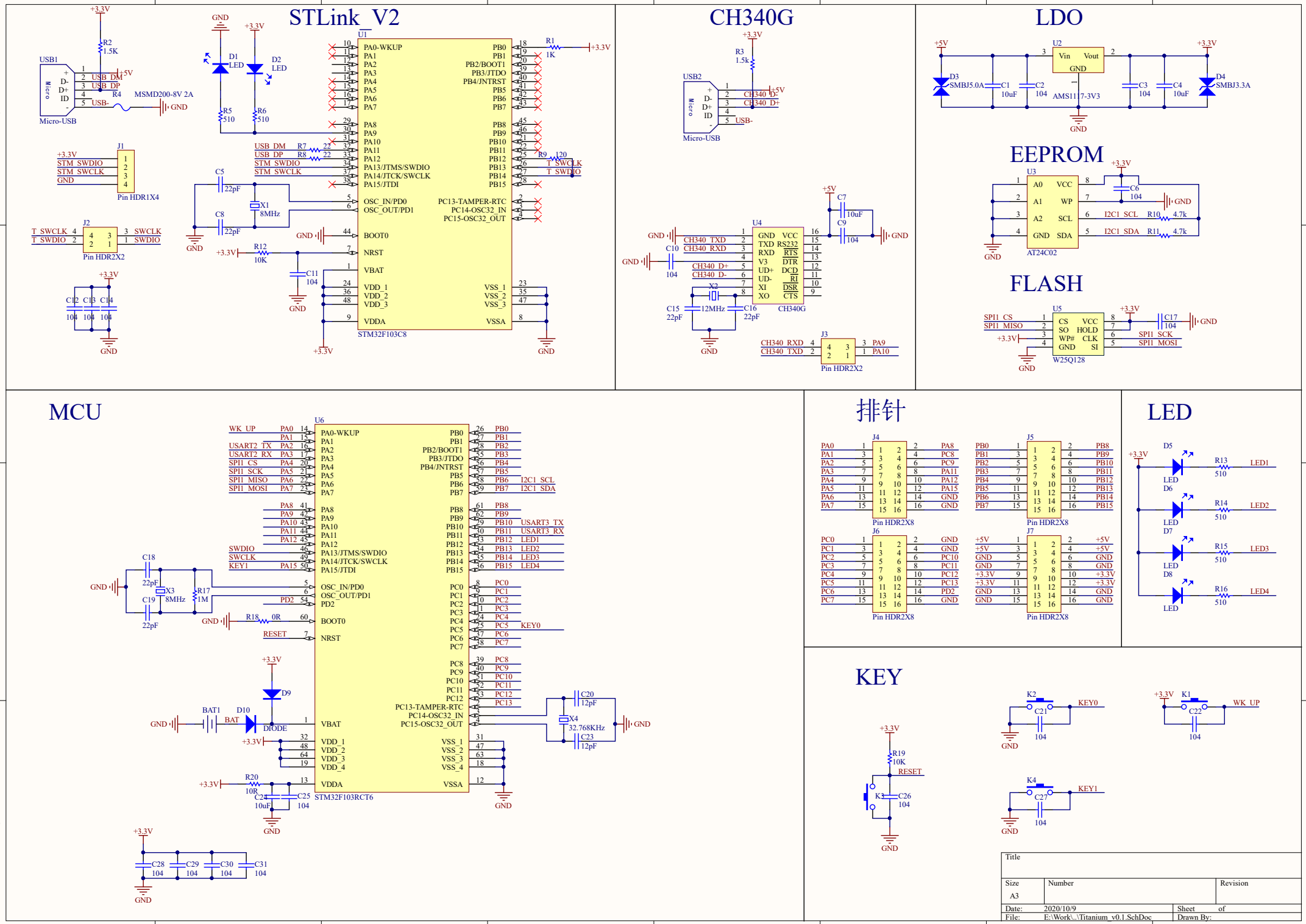
STLink_V2
CH340G
LDO
EEPROM
FLASH
MCU
排针
LED
KEY
USB1
Micro-USB
MSMD200-8V 2A
STM32F103C8
CH340G
AMS1117-3V3
AT24C02
W25Q128
STM32F103RCT6
Pin HDR1X4
Pin HDR2X2
Pin HDR2X8
Title
Size
A3
Number
Revision
Date: 2020/10/9
Sheet of
File: E:\Work\..\Titanium_v0.1.SchDoc
Drawn By: