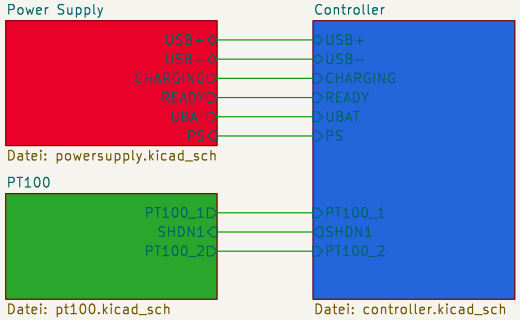

2026 Per−Simon Saal
Licensed under CERN−OHL−S v2
https://github.com/pellematrose/ESP32−C3_Sensor/
https://ohwr.org/cern_ohl_s_v2.txt
hand−crafted−electronics

Sheet: /
File: ESP32−C3_Sensor.kicad_sch

Title: Overview

Size: A4	Date: 2026−01−09	**Rev: 2**
KiCad E.D.A. 9.0.7		Id: 1/4

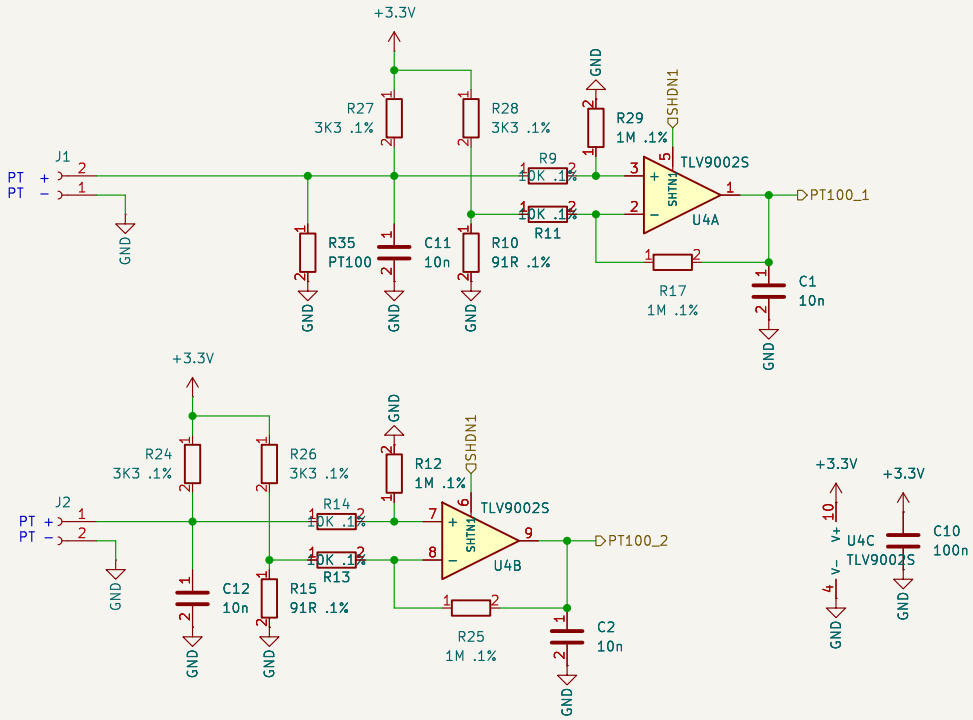

Calibration Resistors:
95R3 C2984377
100R C122970
115R C861636

2026 Per-Simon Saal
Licensed under CERN-OHL-S v2
https://github.com/pellematrose/ESP32-C3_Sensor/
https://ohwr.org/cern_ohl_s_v2.txt
hand-crafted-electronics

Sheet: /PT100/
File: pt100.kicad_sch

Title: PT100

Size: A4	Date: 2026-01-09	**Rev: 2**
KiCad E.D.A. 9.0.7		Id: 2/4

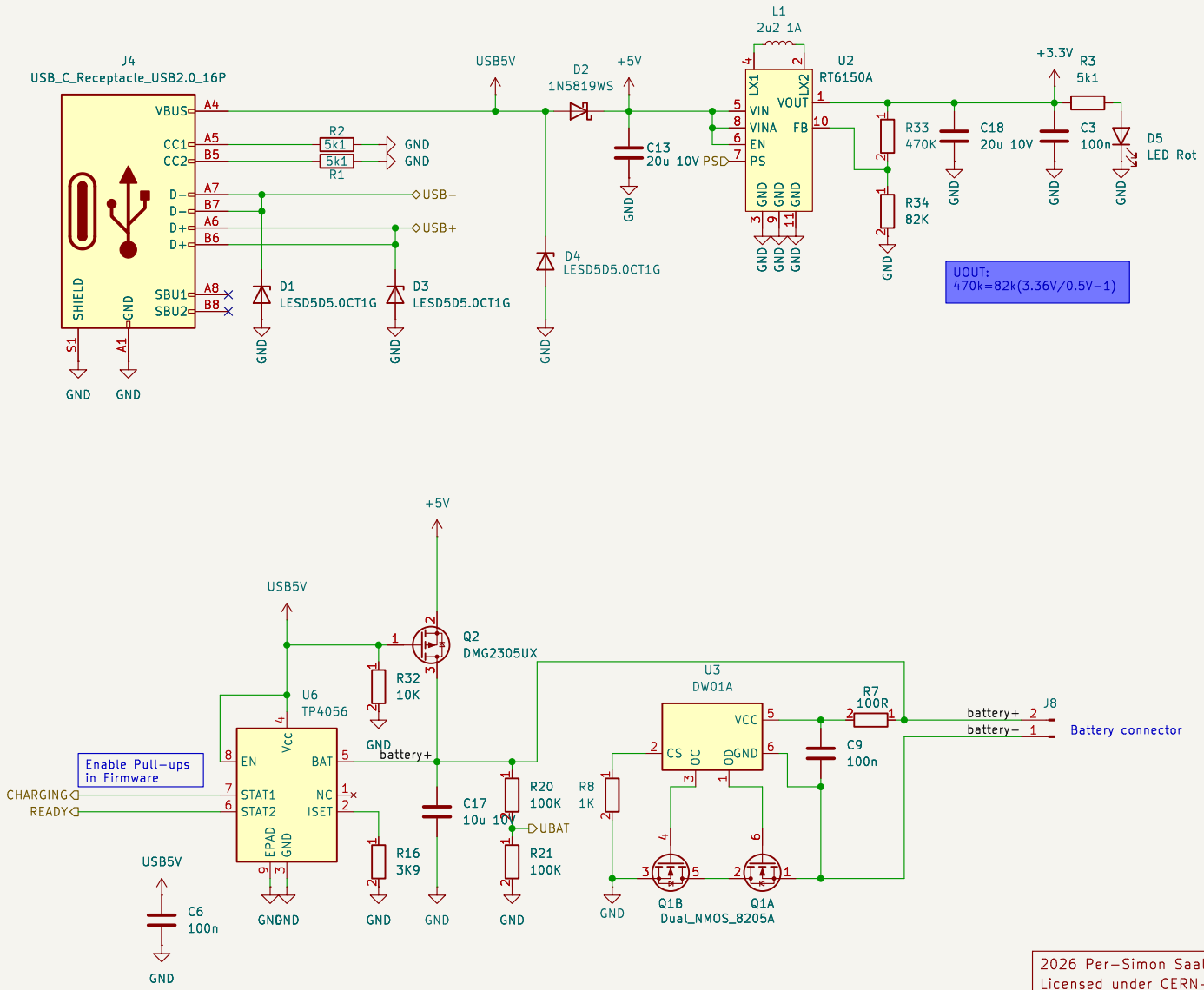

2026 Per−Simon Saal
Licensed under CERN−OHL−S v2
https://github.com/pellematrose/ESP32−C3_Sensor/
https://ohwr.org/cern_ohl_s_v2.txt

hand−crafted−electronics

Sheet: /Power Supply/
File: powersupply.kicad_sch

Title: Power Supply

Size: A4	Date: 2026−01−09	**Rev: 2**
KiCad E.D.A. 9.0.7		Id: 3/4

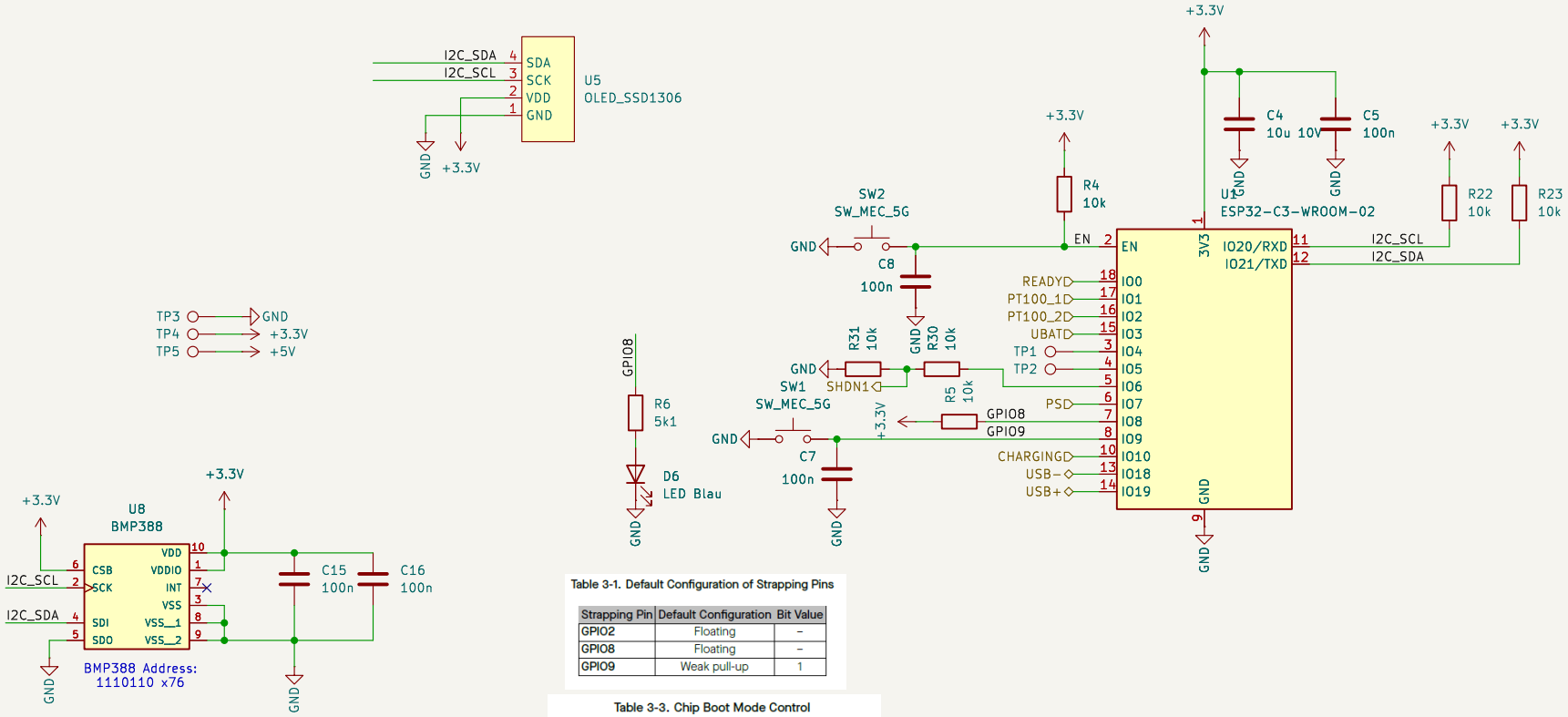

Table 3-1. Default Configuration of Strapping Pins

Strapping Pin	Default Configuration	Bit Value
GPIO2	Floating	–
GPIO8	Floating	–
GPIO9	Weak pull-up	1

Table 3-3. Chip Boot Mode Control

Boot Mode	GPIO2 [2]	GPIO8	GPIO9
SPI boot mode	1	Any value	**1**
Joint download boot mode [3]	1	1	0

[1] **Bold** marks the default value and configuration.

[2] GPIO2 actually does not determine SPI Boot and Joint Download Boot mode, but it is recommended to pull this pin up due to glitches.

[3] Joint Download Boot mode supports the following download methods:

- USB-Serial-JTAG Download Boot
- UART Download Boot

2026 Per-Simon Saal
Licensed under CERN-OHL-S v2
https://github.com/pellematrose/ESP32-C3_Sensor/
https://ohwr.org/cern_ohl_s_v2.txt

hand-crafted-electronics

Sheet: /Controller/
File: controller.kicad_sch

Title: Controller

Size: A4	Date: 2026-01-09	**Rev: 2**
KiCad E.D.A. 9.0.7		Id: 4/4