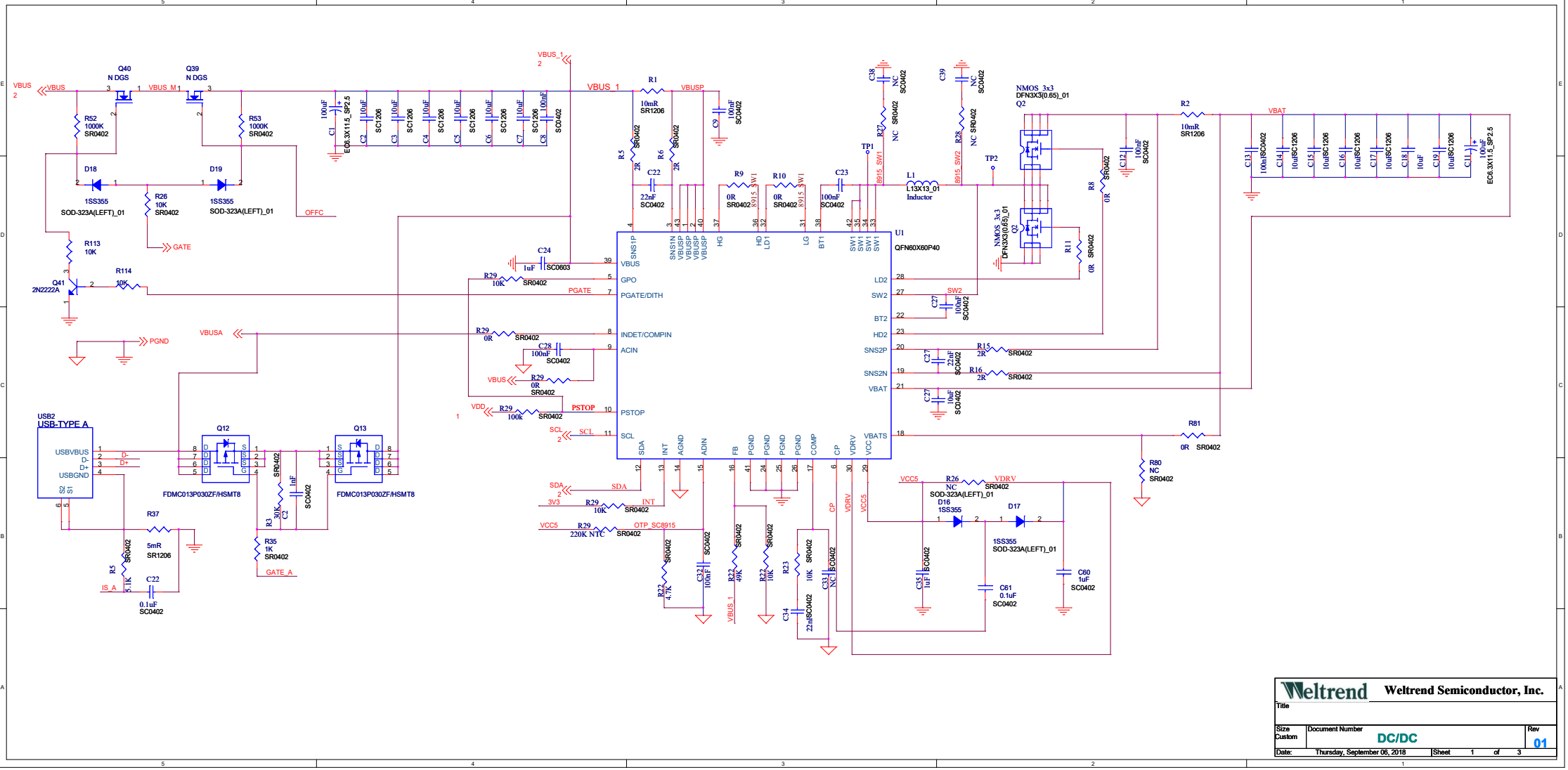

Weltrend Semiconductor, Inc.

Title

Size	Document Number	Rev
Custom	DC/DC	01

Date: Thursday, September 06, 2018 Sheet 1 of 3

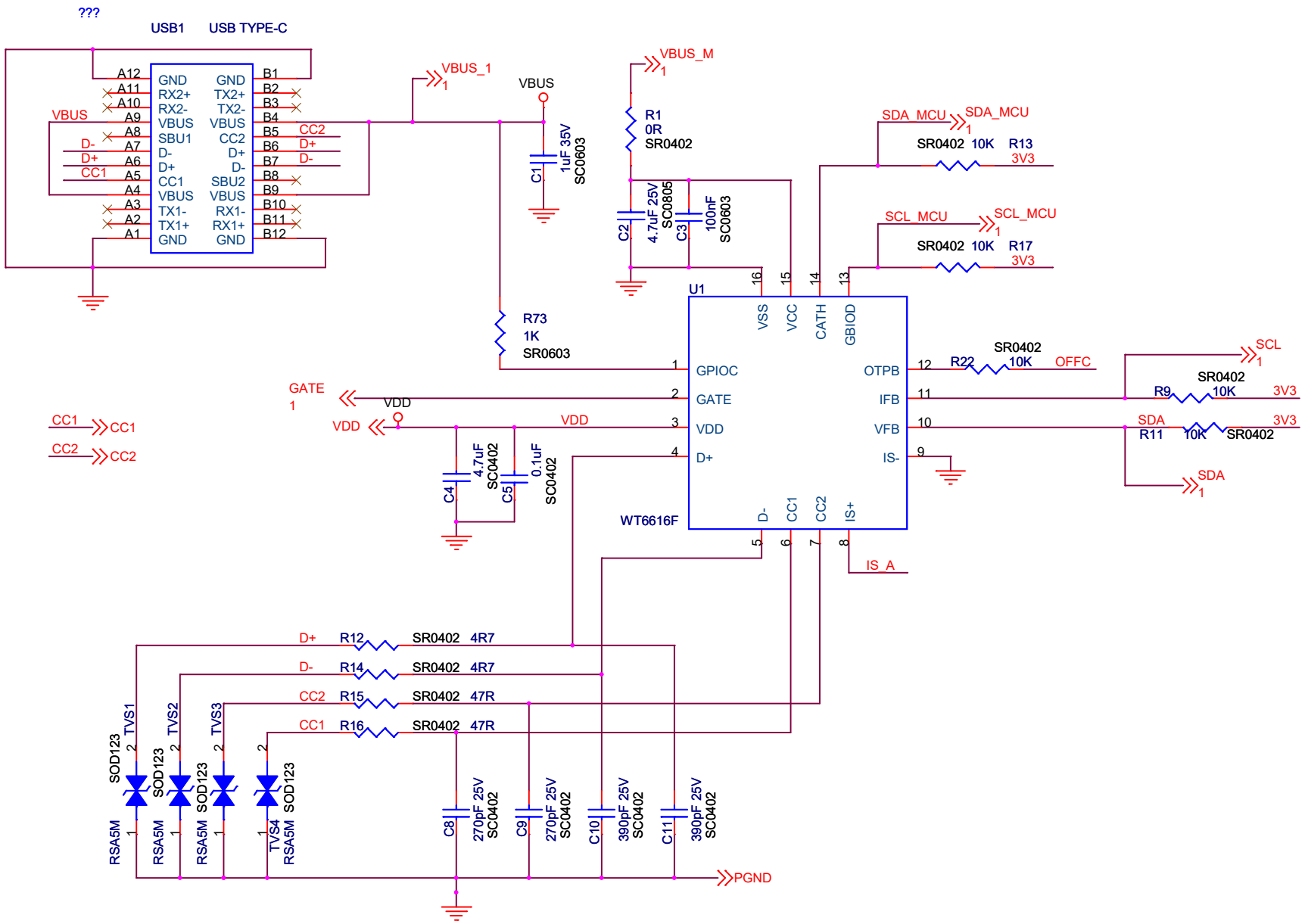

Weltrend Semiconductor, Inc.

Title

Size	Document Number	Rev
A4	WT6616F	01

Date: Monday, May 13, 2019 Sheet 2 of 3

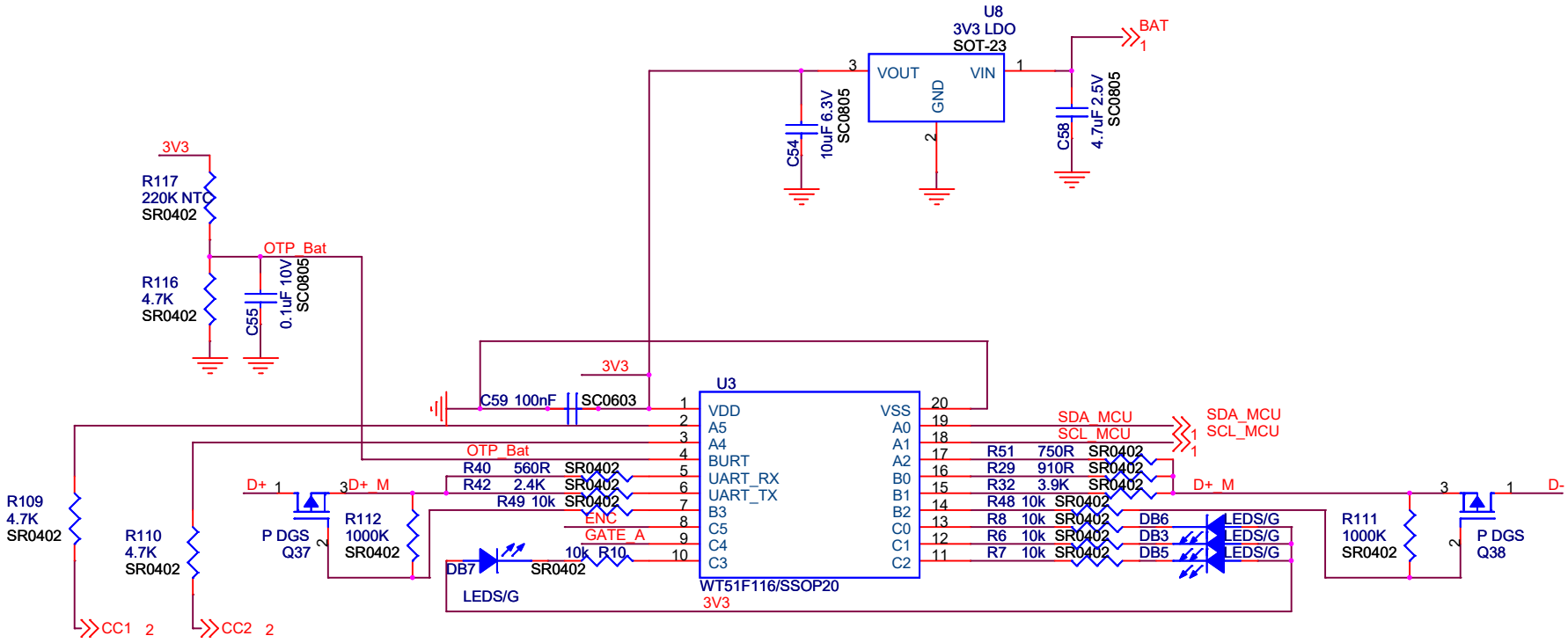

Weltrend Semiconductor, Inc.		
Title		
Size A4	Document Number WT51F116	Rev 01
Date: Monday, May 13, 2019	Sheet 3 of 3	