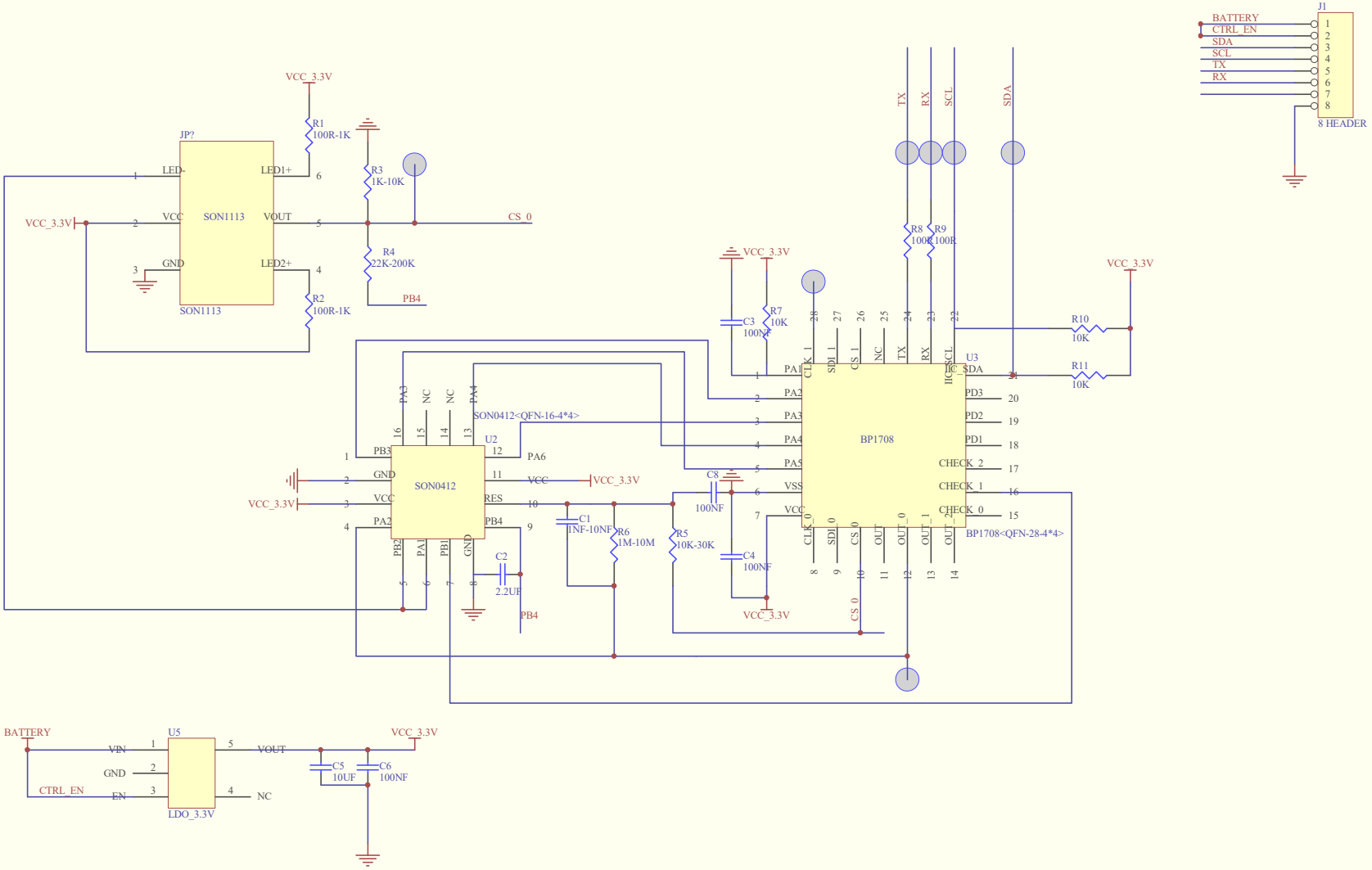

Title		
Size B	Number	Revision
Date: 23-Mar-2018		Sheet of
File: D:\松恩资料\松恩资料\传感器\SON1113\SON1113+BP1708+SON0412.ddb		