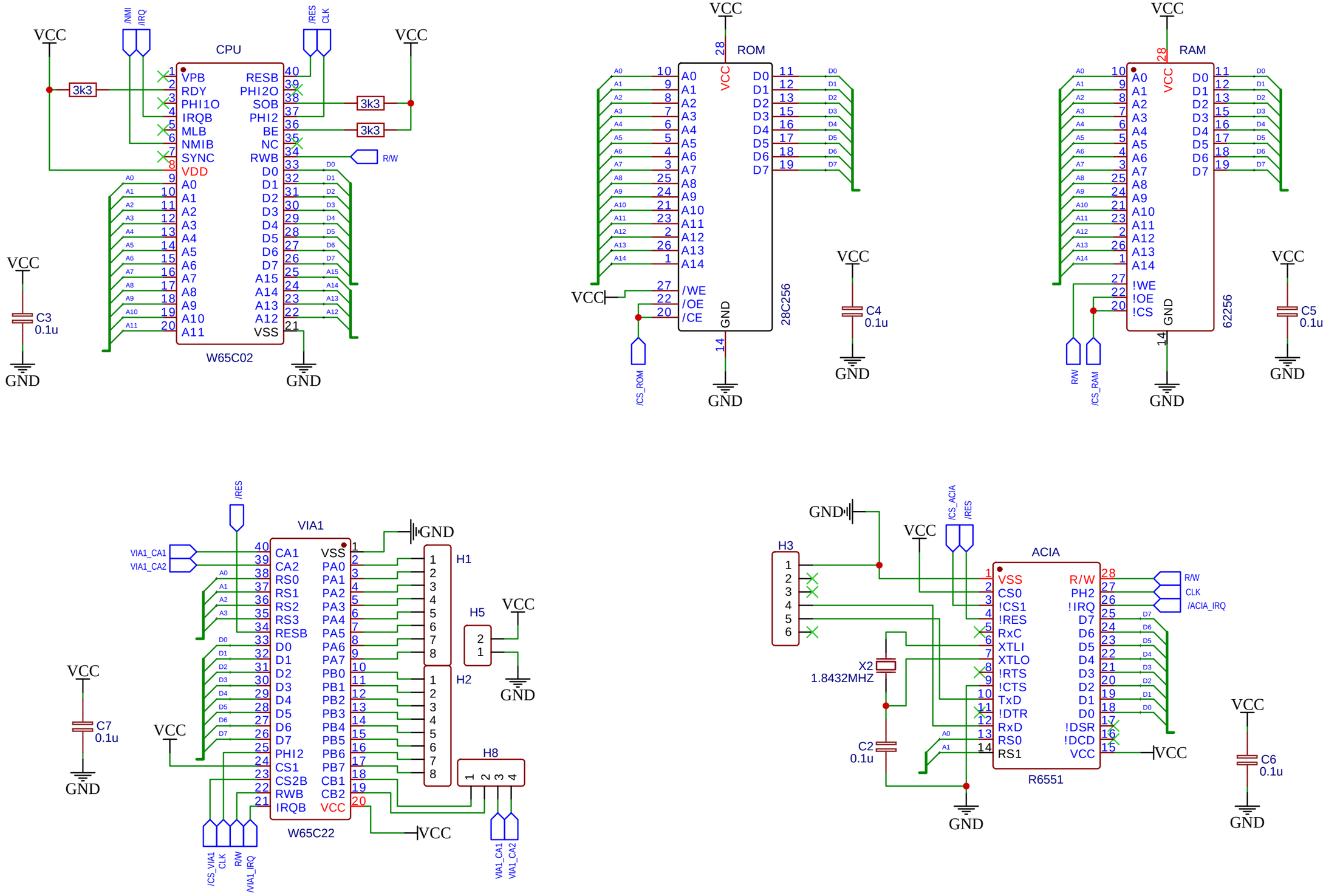

TITLE: Sheet_1	REV: 1.0
EasyEDA	Company: Pep
	Sheet: 1/1
	Date: 2022-06-05 Drawn By: pep31

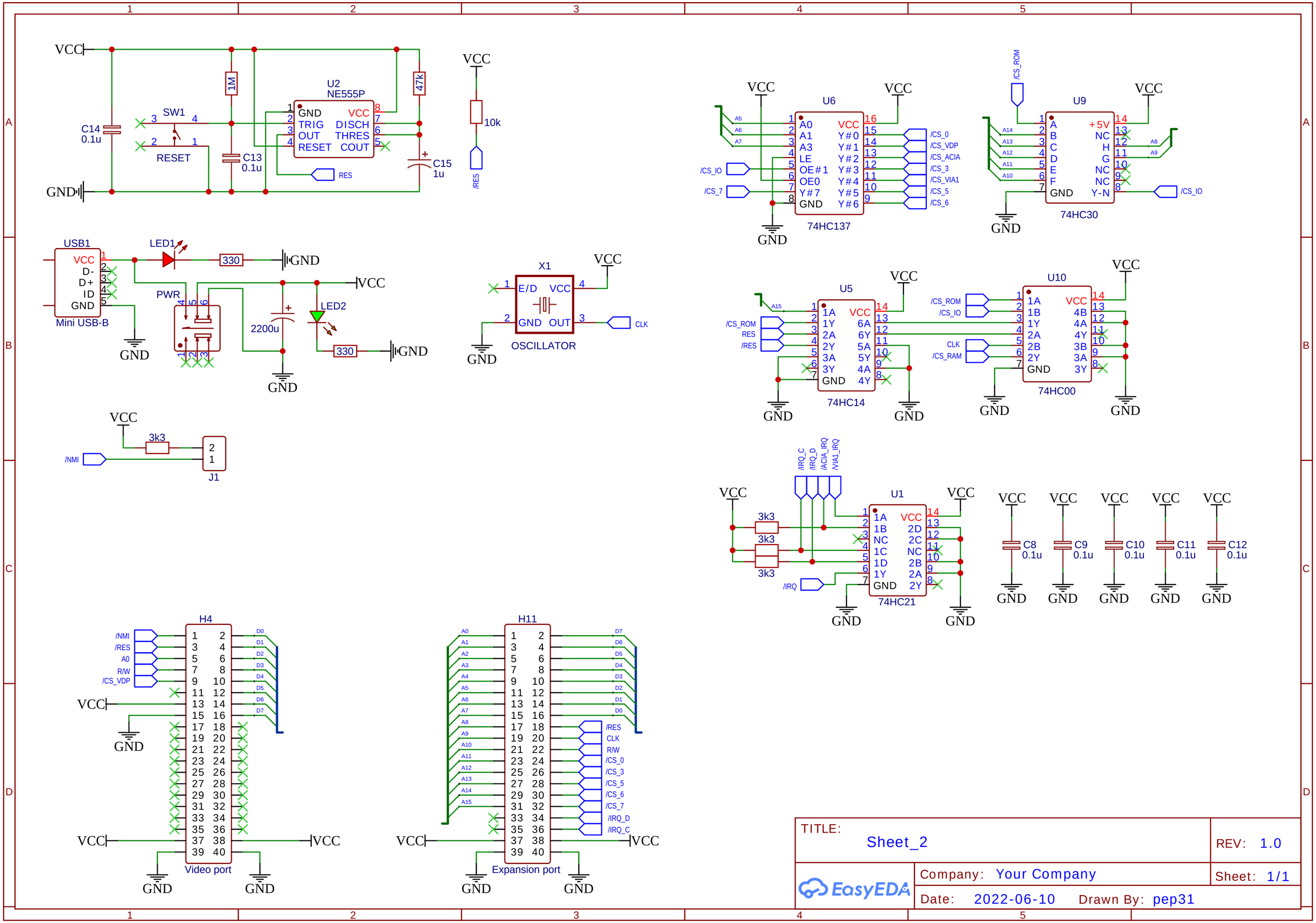

TITLE: Sheet_2	REV: 1.0
Company: Your Company	Sheet: 1/1
Date: 2022-06-10 Drawn By: pep31	

EasyEDA