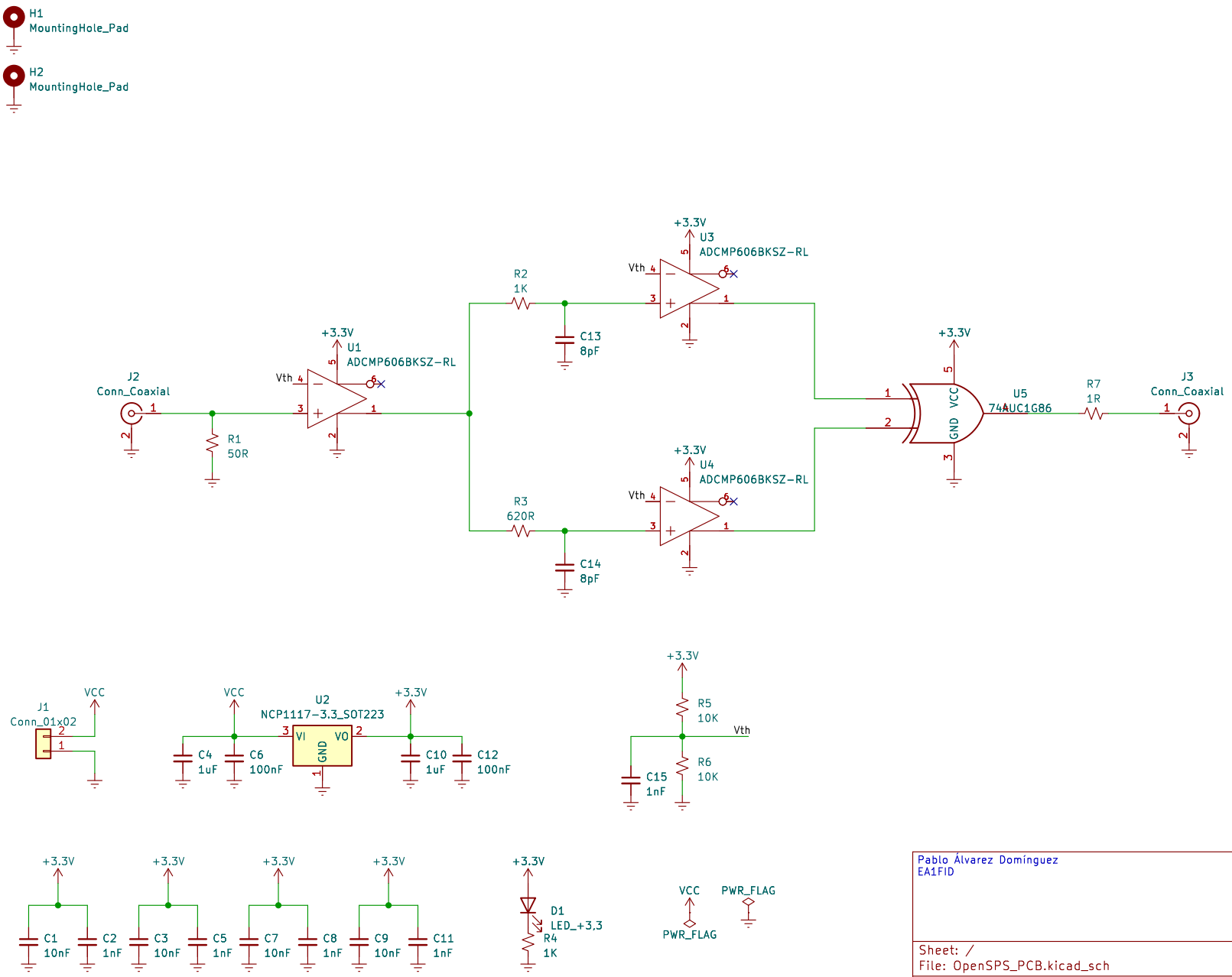

Pablo Álvarez Domínguez
EA1FID

Sheet: /
File: OpenSPS_PCB.kicad_sch

Title: OpenSPS Single Photon Source

Size: A4	Date: 2022.04.01	Rev: 1.0
KiCad E.D.A. kicad 7.0.1		Id: 1/1