01.Title_Reference History

02.Block_Diagram

03.Power rails Block Diagram

04.QCA9558_Pwr_Gnd_USB

05.QCA9558_SGMII_RGMII_PCIe

06.QCA9558_DDR_NAND_GPIO

07.QCA9558_GPIOs_Boot STRAP

08.DDR2

09.EJTAG_USB_UART_NAND

10.AR8327_GIGA_Switch

11.AR8327_Ethernet_Magnetics

12.MISC_I2S_LED_RESET SW

13.External MII_Connector

14.2G RF_QCA9558

15.2G RX_ANT switch

16.PCIe Connector

17.5G Antenna

18.Power_Regulators

DRAGINO

Dragino Technology Co., Limited

Room 1101, City Develop Commercial Center,
No. 016 QingLinRoad LongCheng Street, LongGang
District, Shenzhen, 518101, China

Title	Libre Router	
Size A3	Document Number: Title_Reference History	Rev 0.3
Date: Monday, August 21, 2017	Sheet 1 of 17	

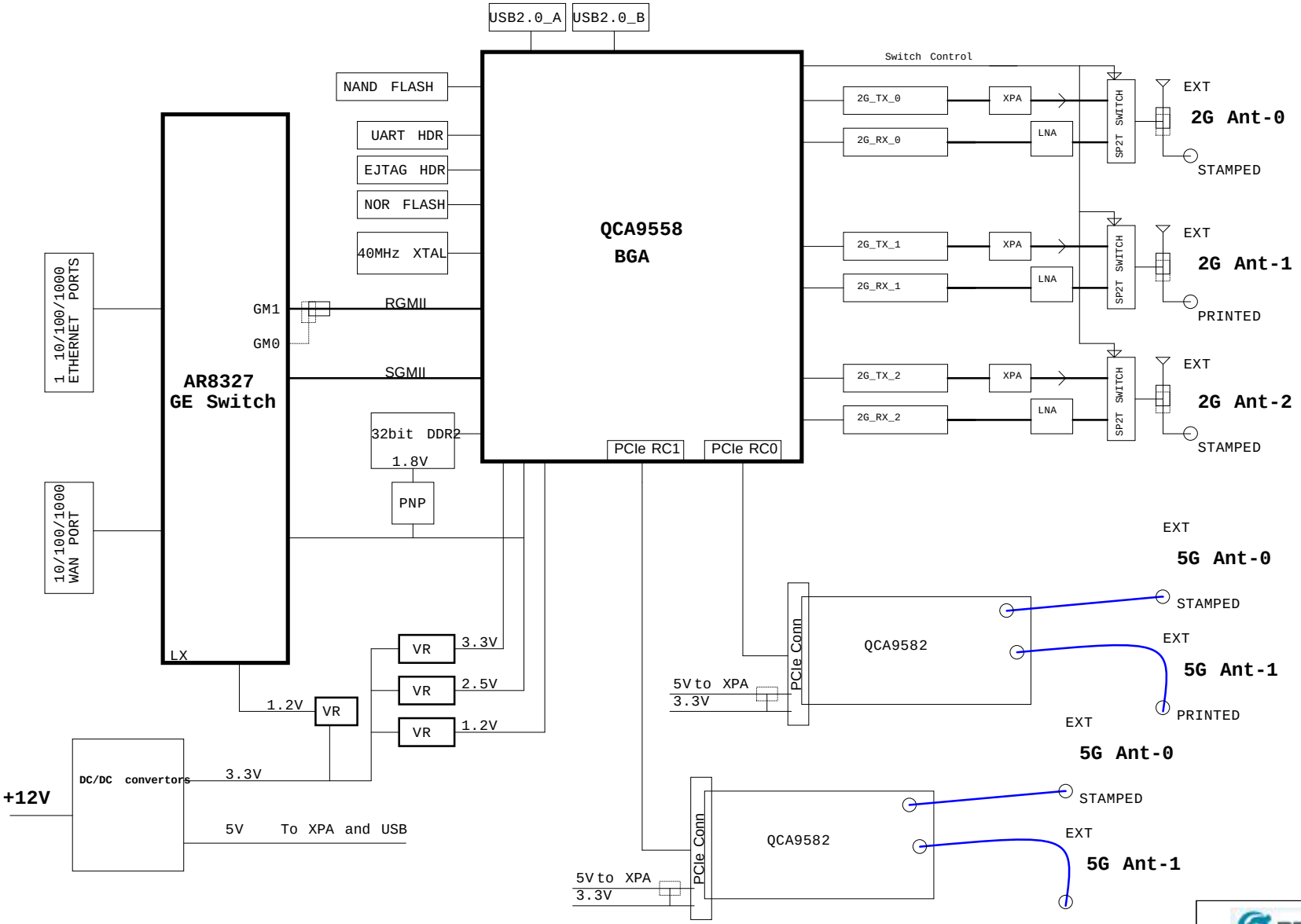
USB2.0_A
USB2.0_B
NAND FLASH
UART HDR
EJTAG HDR
NOR FLASH
40MHz XTAL
QCA9558
BGA
Switch Control
2G_TX_0
2G_RX_0
XPA
LNA
SP2T SWITCH
EXT
2G Ant-0
STAMPED
2G_TX_1
2G_RX_1
2G Ant-1
PRINTED
2G_TX_2
2G_RX_2
2G Ant-2
1 10/100/1000 ETHERNET PORTS
GM1
GM0
RGMII
SGMII
AR8327
GE Switch
32bit DDR2
1.8V
PNP
PCIe RC1
PCIe RC0
10/100/1000 WAN PORT
LX
VR
3.3V
2.5V
1.2V
DC/DC convertors
+12V
5V To XPA and USB
PCIe Conn
QCA9582
5V to XPA
3.3V
5G Ant-0
5G Ant-1
DRAGINO
Libre Router
Block_Diagram
Monday, August 21, 2017

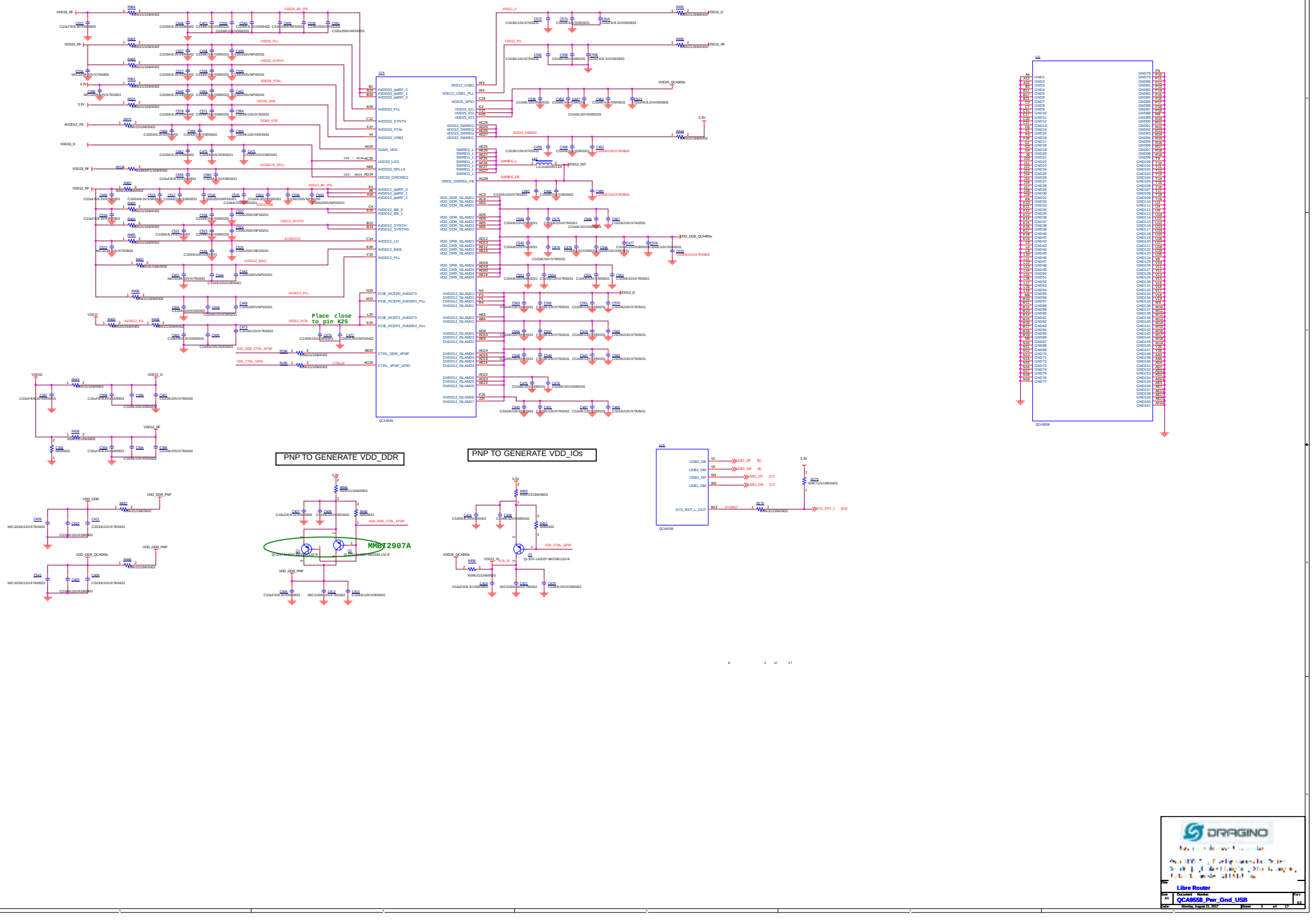
Place close to pin K25
PNP TO GENERATE VDD_DDR
PNP TO GENERATE VDD_IOs
MMBT2907A
Libre Router
QCA9558_Pwr_Gnd_USB

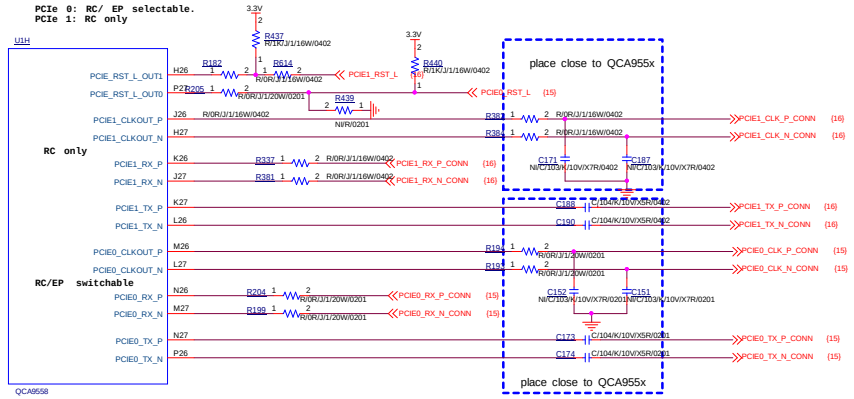

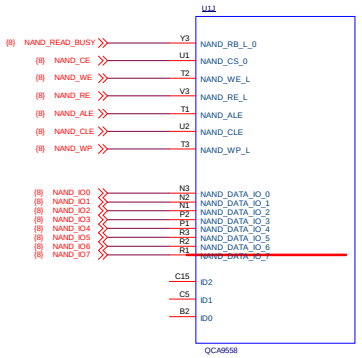

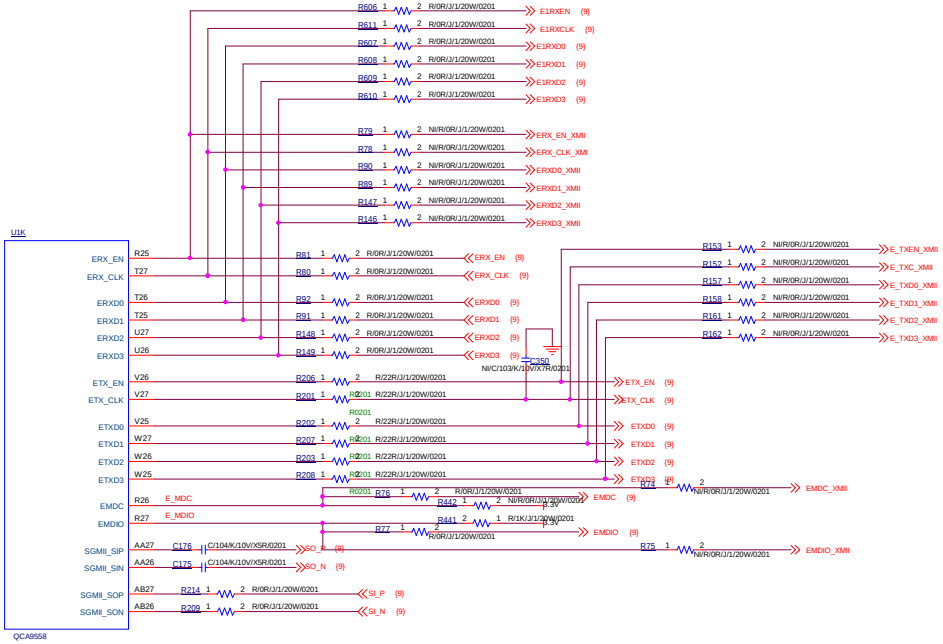

DRAGINO
Dragino Technology Co., Limited
Room 1007, 10th Floor, Yongtai Commercial Center,
No.346 Guanlidong Industrial Road, Haizhu
District, Guangzhou 510310, China

Title	Libre Router		
Size A2	Document Number QCA9558_SGMII_RGMII_PCIe		Rev 0.3
Date: Monday, August 21, 2017	Sheet 4 of 17		

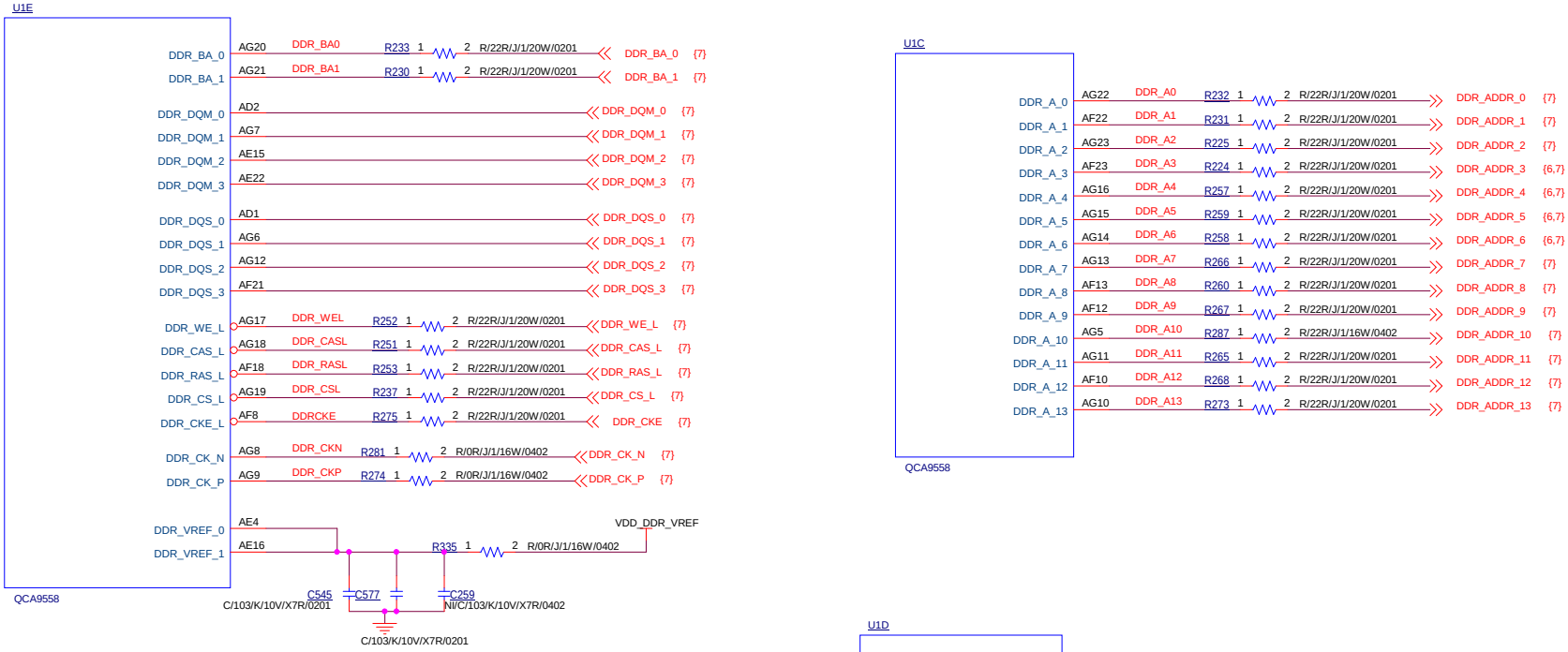

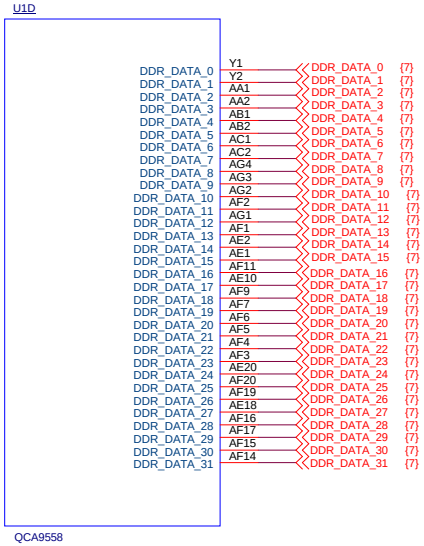

DRAGINO
Dragino Technology Co., Limited
Room 1101, City Develop Commercial Center,
No. 946 QingLinRoad LongCheng Street, LongGang
District, Shenzhen 518101, China

Title	Libre Router	
Size A3	Document Number QCA9558_DDR	Rev 0.3
Date: Monday, August 21, 2017	Sheet 5 of 17	

Boot Strap Options

PIN	NAME	DESCRIPTION
GPIO12	RC_SELECT	0 - PCIE EP (default) 1 - PCIE RC
GPIO14	DDR_WIDTH	0 - 16bit 1 - 32bit
GPIO6	BOOT_SELECT	0 - Select from ROM 1 - From SPI Flash
GPIO15	REF_CLK	0 - 25MHz 1 - 40MHz
GPIO4	SRIF_ENABLE	0 - Disabled(default) 1 - Enabled
GPIO13	USB_MODE	0 - Host Mode (default) 1 - Device Mode
GPIO16	DISABLE_OTP_ACCESS	0 - OTP access enabled (default) 1 - OTP access disabled
GPIO7	SDRAM_SELECT	0 - SDRAM disable (default) 1 - SDRAM enable
GPIO10	DDR_SELECT	0 - Selects DDR 2 (default) 1 - Selects DDR 1
DDR AD3	TESTROM_DISABLE	0 - Enabled 1 - Disabled (default)
DDR AD5	JTAG_MODE	1-JTAG (default) 0 - EJTAG
DDR AD4 DDR AD6	BOOT_INTF	00 - USB 01 - PCIE EP 10 - BOOT MDIO 11 - NAND FLASH (default) Valid only if bit 2 (Boot from ROM) is 0

ROUTER INTERFACE

ROUTER2 INTERFACE

BEE SOCKET

Libre Router

QCA9558_GPIOs_Boot STRAP

Monday, August 21, 2017

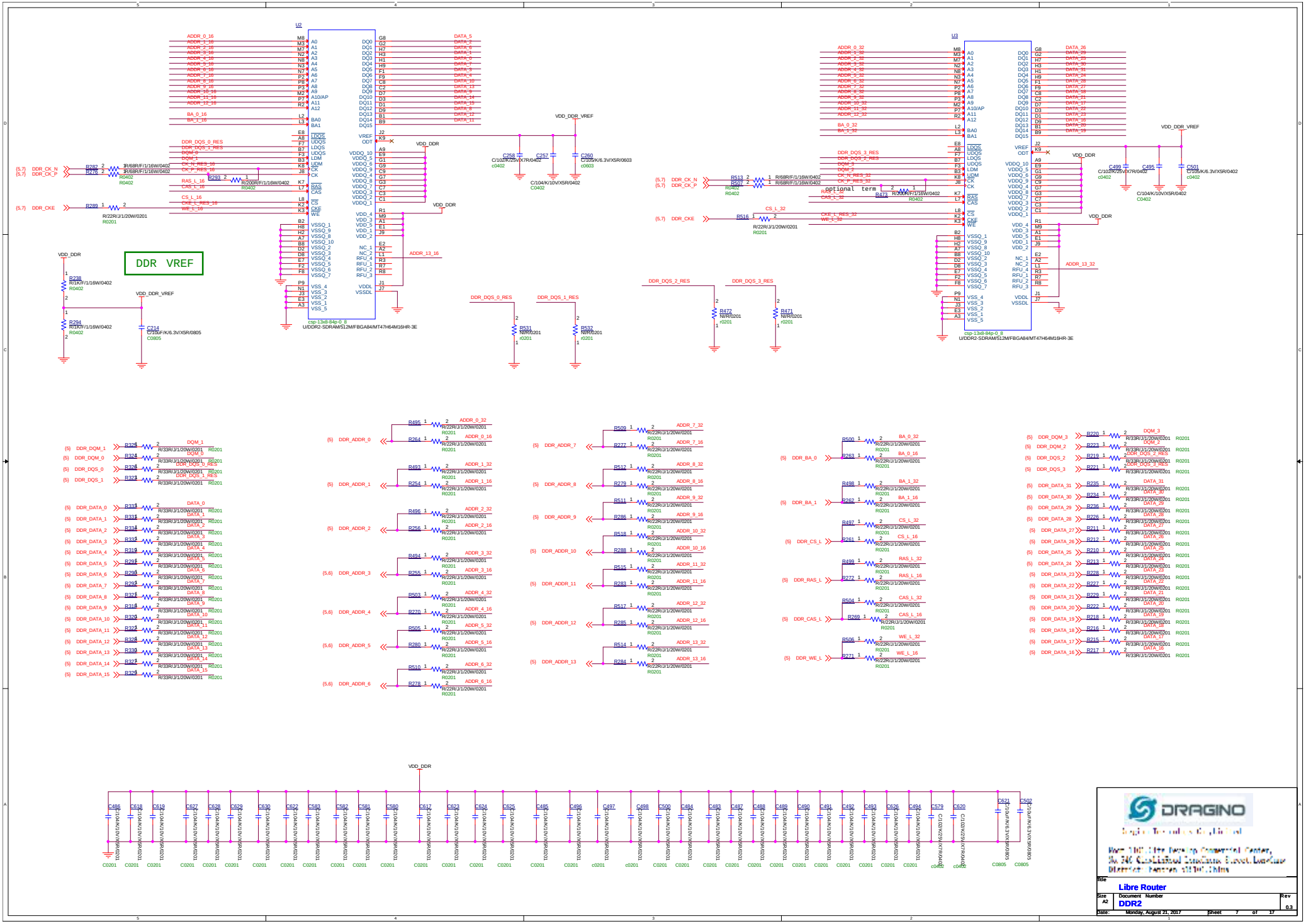
DDR VREF
U2
U3
csp-13x8-84p-0.8
U/DDR2-SDRAM/512M/FBGA84/MT47H64M16HR-3E
optional term
VDD_DDR
VDD_DDR_VREF
DRAGINO
Libre Router
DDR2
Monday, August 21, 2017

EJTAG HEADER

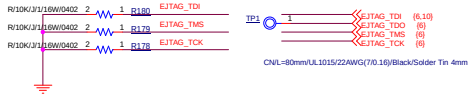

UART HEADER

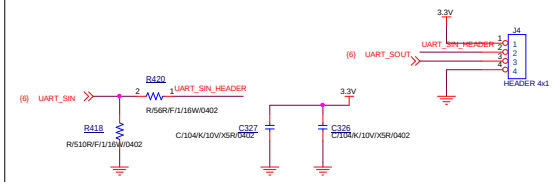

SPI Flash -NOR

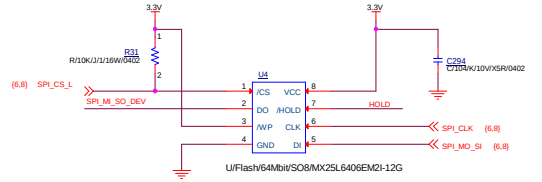

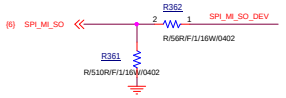

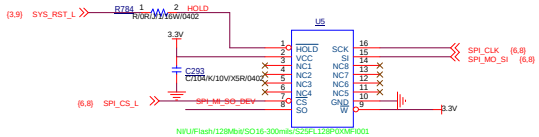

135-00102-000: 128Mb device 16-SO
135-00049-000: 64Mb device 16-SO

USB

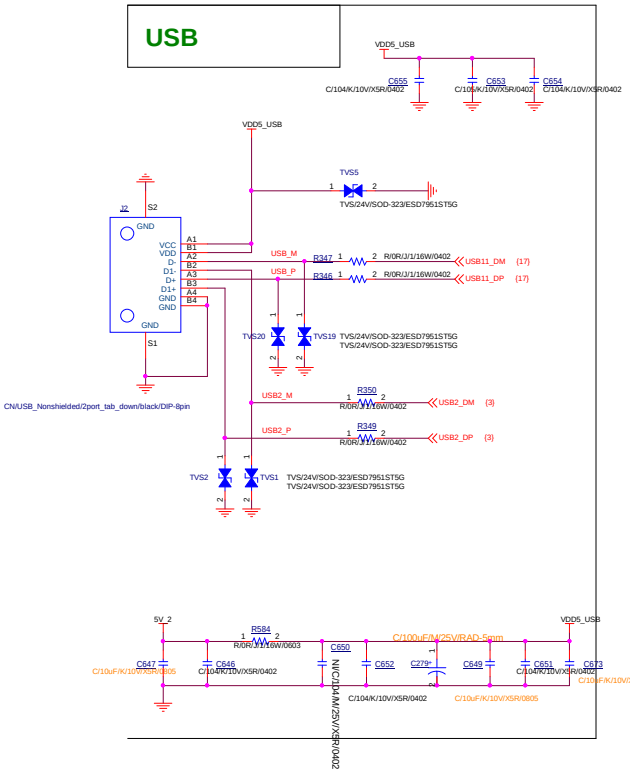

NAND Flash

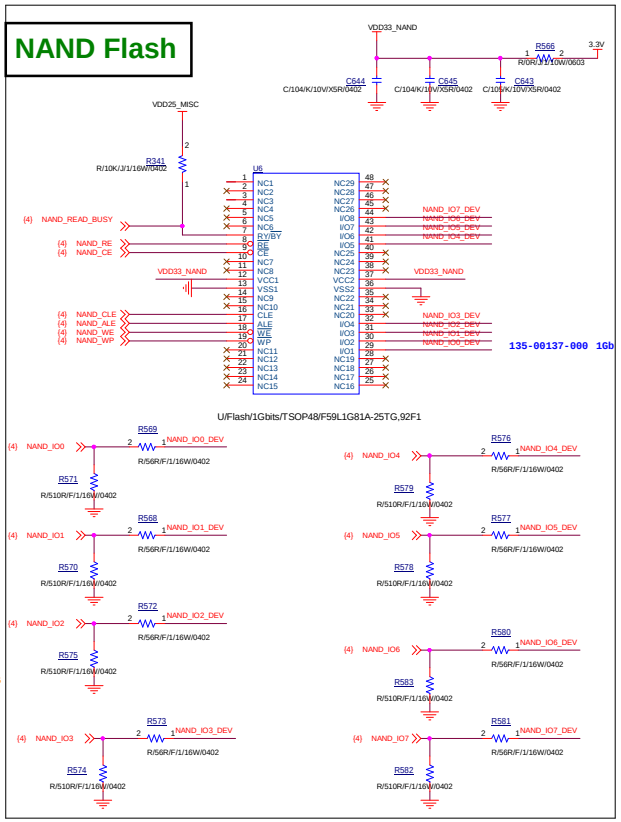

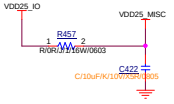

DRAGINO

Libre Router

Size	Document Number	Rev
A2	EJTAG_USB_UART_NAND	0.3
Date: Monday, August 21, 2017	Sheet 8 of 17	

SGMII i/f to QCA9558

(4) SO_P — R168 — R/0R/J/1/20W/0201 — SOP
(4) SO_N — R165 — R/0R/J/1/20W/0201 — SON
(4) SI_P — C136 — C104/K/10V/X5R/0201 — SIP
(4) SI_N — C137 — C104/K/10V/X5R/0201 — SIN

RGMII i/f to QCA9558

to RGMII0

(4,9) ETX_CLK — R154 — R/0R/J/1/20W/0201 — GTXCLK
(4,9) ETXD3 — R163 — R/0R/J/1/20W/0201 — TXD3
(4,9) ETXD2 — R164 — R/0R/J/1/20W/0201 — TXD2
(4,9) ETXD1 — R159 — R/0R/J/1/20W/0201 — TXD1
(4,9) ETXD0 — R160 — R/0R/J/1/20W/0201 — TXD0
(4,9) ETX_EN — R155 — R/0R/J/1/20W/0201 — TXEN

(4) ERX_EN — R86 — R/0R/J/1/20W/0201 — RXDV
(4) ERXD0 — R94 — R/0R/J/1/20W/0201 — RXD0
(4) ERXD1 — R93 — R/0R/J/1/20W/0201 — RXD1
(4) ERXD2 — R151 — R/0R/J/1/20W/0201 — RXD2
(4) ERXD3 — R150 — R/0R/J/1/20W/0201 — RXD3
(4) ERX_CLK — R82 — R/0R/J/1/20W/0201 — RXCLK
(4) EMDIO — R88 — R/0R/J/1/20W/0201 — TXD_MDIO
(4) EMDC — R87 — R/0R/J/1/20W/0201 — RXD_MDC

to RGMII1

(4,9) ETX_EN — R600 — R/0R/J/1/20W/0201 — RG1_TXEN
(4,9) ETX_CLK — R601 — R/0R/J/1/20W/0201 — RG1_GTXCLK
(4,9) ETXD3 — R602 — R/0R/J/1/20W/0201 — RG1_TXD3
(4,9) ETXD2 — R603 — R/0R/J/1/20W/0201 — RG1_TXD2
(4,9) ETXD1 — R604 — R/0R/J/1/20W/0201 — RG1_TXD1
(4,9) ETXD0 — R605 — R/0R/J/1/20W/0201 — RG1_TXD0

(4) E1RXEN — R594 — R/0R/J/1/20W/0201 — RG1_RXDV
(4) E1RXD0 — R595 — R/0R/J/1/20W/0201 — RG1_RXD0
(4) E1RXD1 — R596 — R/0R/J/1/20W/0201 — RG1_RXD1
(4) E1RXD2 — R597 — R/0R/J/1/20W/0201 — RG1_RXD2
(4) E1RXD3 — R598 — R/0R/J/1/20W/0201 — RG1_RXD3
(4) E1RXCLK — RG1_RXCLK

(3,8) SYS_RST_L — SYS_RST_L — S17_INTn — R167 — R/0R/J/1/16W/0201 — S17_INTn0

Eth LED i/f to LED display

S17_LEDn_0 — S17_LEDn_0
S17_LEDn_1 — S17_LEDn_1
S17_LEDn_2 — S17_LEDn_2
S17_LEDn_3 — S17_LEDn_3 (11)
S17_LEDn_4 — S17_LEDn_4 (11)

S17_LEDn1000_0 — S17_LEDn1000_0
S17_LEDn1000_1 — S17_LEDn1000_1
S17_LEDn1000_2 — S17_LEDn1000_2
S17_LEDn1000_3 — S17_LEDn1000_3 (11)
S17_LEDn1000_4 — S17_LEDn1000_4 (11)

Power On Strapping

DVDD_2.5V_S17

pin-B44 — S17_SPI_DO — R415 — R/10K/J/1/16W/0201 — MDIO_EN (D:1)
pin-B49 — RG1_RXD2 — R97 — Nil/0 — SPI_SIZE(D:0)
pin-A65 — RXCLK — R83 — R/10K/J/1/20W/0201 — LED_OPEN_EN(D:1)
pin-A54 — RG1_RXDV — R412 — R/10K/J/1/16W/0201 — SPI_EN(D:0)
pin-A69 — RXD1 — R408 — R/10K/J/1/16W/0201 — AZ_EN

Mode_oclk_selH
1, use ext reg
0, set 1.1V at int reg LX

place close to AR8327

Normal Setting

pin-A64 — RXDV — R409 — R/10K/J/1/16W/0201
pin-B60 — RXD3 — R428 — R/10K/J/1/16W/0201
pin-A70 — RXD2 — R430 — Nil/0 — R429 — R/10K/J/1/16W/0201
pin-A55 — RG1_RXD0 — R410 — R/10K/J/1/16W/0201 — R414 — Nil/0

11: most save power; PHY power is minimize.
01: short cable save some power, long cable does not.
10: short and long cable all save some power. (recommended)
00: not save power.

25MHz Source

X1 — XTLI — XTLO — Y/25MHz/10ppm/2pin — C506 — C/270/J/50/NP0/0201 — C429 — C/270/J/50/NP0/0201

Amplitude of XTLI input clock must be less than 1.5V.

SPI Interface

C142 — Nil/0/103/K/10V/X7R/0402 — (1000pF) — DVDD_2.5V_S17

U10 — 16Bit Mode

S17_SPI_CS — CS
S17_SPI_CLK — CLK
S17_SPI_DO — DI
S17_SPI_DI — DO
No Load
VCC — NC2 — NC1 — GND — No_Load

C145 — Nil/C/103/K/10V/X7R/0402

Reset

DVDD_2.5V_S17 — (100K) — R416 — Nil/0

SYS_RST_L — R96 — S17_RSTL — R/4.7K/J/1/16W/0402 — R95 — R/33.2K/J/1/16W/0402 — C325 — (47.1uF) — Nil/C/103/K/10V/X7R/0201

1.25V PLL Power

R434 — R/0R/J/1/16W/0201 — AVDDVCO_O

C388 — C/104/K/10V/X5R/0201 — C382 — Nil/C/103/K/10V/X7R/0201
AVDDVCO_I
C376 — C/104/K/10V/X5R/0201 — C378 — Nil/C/103/K/10V/X7R/0201

U8 — Atheros AR8327N

VDD3P3_ETH — C423 — C/10uF/K/6.3V/X5R/0805 — C424 — C/105/K/6.3V/X5R/0402
DVDD_2.5V_S17 — R431 — R/4.7K/J/1/16W/0402 — R432 — R/4.7K/J/1/16W/0402 — C351 — C/104/K/10V/X5R/0201
DVDD_1.2V_S17 — R433 — R/0R/J/1/20W/0201 — C353 — C/104/K/10V/X5R/0201

C156 — C/104/K/10V/X5R/0201
C/102/K/25V/X7R/0201 — C360 — R435 — C160 — C/104/K/10V/X5R/0201 — ChipR,THKF,2K37,F,1/16W,0402
C163 — C/104/K/10V/X5R/0201
C162 — C/104/K/10V/X5R/0201

R85 — R/0R/J/1/20W/0201 — RXCLK
C88 — Nil/C/103/K/10V/X7R/0201
R406 — Nil/0 — (1.5K)
C323 — Nil/C/103/K/10V/X7R/0201
C86 — C/104/K/10V/X5R/0201
R613 — R/0R/J/1/20W/0201 — RG1_GTXCLK
C657 — Nil/C/103/K/10V/X7R/0201
R612 — R/0R/J/1/20W/0201 — RG1_RXCLK
C656 — Nil/C/103/K/10V/X7R/0201

C141 — C/104/K/10V/X5R/0201
R170 — C139 — C140 — C/104/K/10V/X5R/0201 — C138 — C/104/K/10V/X5R/0201
ChipR,THKF,2K37,F,1/16W,0201 — C/102/K/25V/X7R/0201

VDD3P3_ETH — L40 — FB/600ohm/0.5ohm/500mA/0603 — AVDD_3.3V
C504 — C/10uF/K/6.3V/X5R/0805
C505 — C/105/K/6.3V/X5R/0402

AVDD_3.3V — C370 C372 C375 C380 C385 C381 C362 — C/104/K/10V/X5R/0201

Close to S17

L42 — U4.7uH/20%/1.65A/SMD-4.5*4.0mm — R186 — Nil/0
R169 — Nil/0
C325 — Nil/C/103/K/10V/X7R/0402

DVDD_1.2V_S17 — C155 — 2.9K/7mA — C/226/M/6.3V/X5R/0805 — C/10uF/K/6.3V/X5R/0805
C158 C364 C366 C354 C348 C352 C361 C425 — C/104/K/10V/X5R/0201
AVDD_1.2V_S — L38 — FB/600ohm/0.5ohm/500mA/0603 — C356 — C/104/K/10V/X5R/0201

C656,C657 close to L66

VDD2S_REG — L22 — FB/600ohm/0.5ohm/500mA/0603 — C157 — C/105/K/6.3V/X5R/0201 — C428 — C/105/K/6.3V/X5R/0201
C368 C367 C349 C357 — C/104/K/10V/X5R/0201
C324 — C/105/K/6.3V/X5R/0402
DVDD_2.5V_S17 — DVDD25_REG — L70
C353 — C/104/K/10V/X5R/0201
VDD15_REG_1
C363 — C/104/K/10V/X5R/0201

AVDD_1.2V_S17 — L23 — FB/600ohm/0.5ohm/500mA/0603 — C158 — C/10uF/K/6.3V/X5R/0603
C366 C369 C371 C373 C374 C379 C387 C386 C384 C383 C359 C358 — C/104/K/10V/X5R/0201
C377 — C/105/K/6.3V/X5R/0402
L41 — FB/56nH/0.5ohm/500mA/0603 — DVDD — C161 — C/104/K/10V/X5R/0201

Eth i/f to Transformers

S17_P0_TRX0+ … S17_P0_TRX3- (10)
S17_P1_TRX0+ … S17_P1_TRX3- (10)
S17_P2_TRX0+ … S17_P2_TRX3- (10)
S17_P3_TRX0+ … S17_P3_TRX3- (10)
S17_P4_TRX0+ … S17_P4_TRX3- (10)

DRAGINO

Title: Libre Router
Size: A2 — Document Number: AR8327_GIGA_Switch — Rev: 0.3
Date: Monday, August 21, 2017 — Sheet 9 of 17

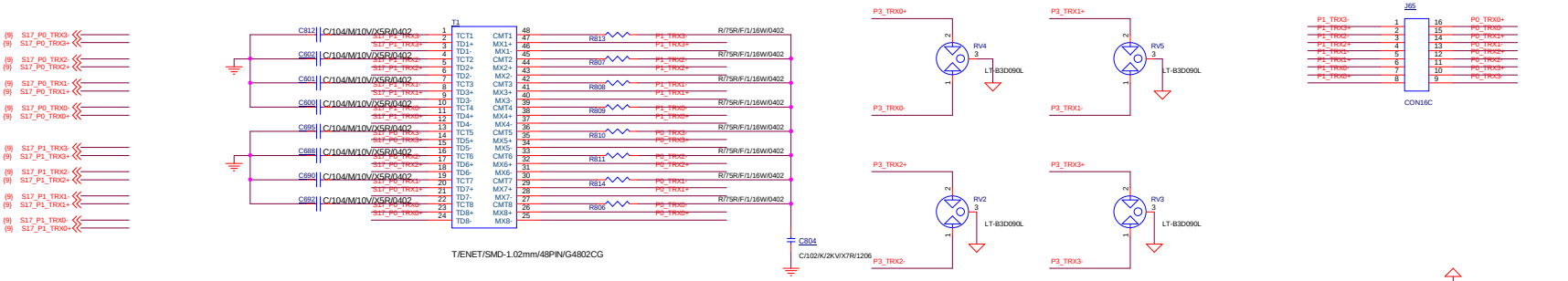
T/ENET/SMD-1.02mm/48PIN/G4802CG
C804
C/102/K/2KV/X7R/1206
P3_TRX0+
P3_TRX0-
P3_TRX1+
P3_TRX1-
P3_TRX2+
P3_TRX2-
P3_TRX3+
P3_TRX3-
RV4
RV5
RV2
RV3
LT-B3D090L
J65
CON16C

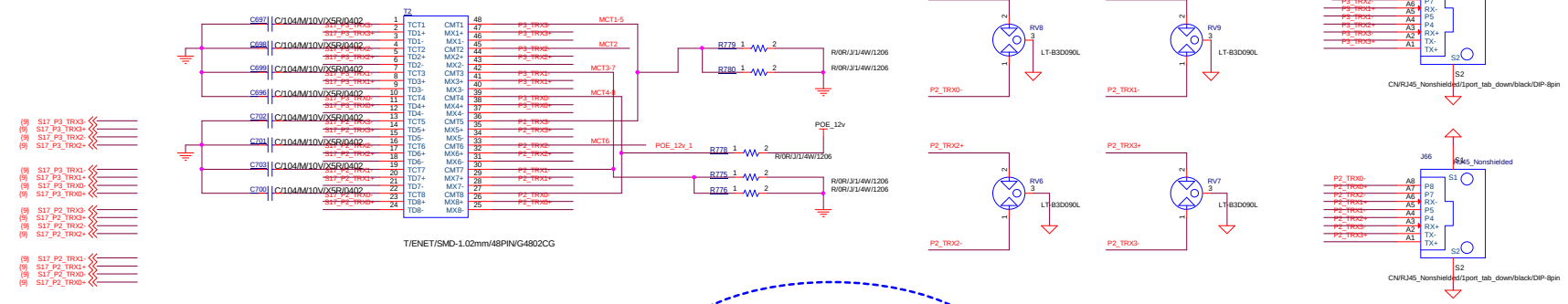
T/ENET/SMD-1.02mm/48PIN/G4802CG
MCT1-5
MCT2
MCT3-7
MCT4-8
MCT6
POE_12v
POE_12v_1
P2_TRX0+
P2_TRX0-
P2_TRX1+
P2_TRX1-
P2_TRX2+
P2_TRX2-
P2_TRX3+
P2_TRX3-
RV8
RV9
RV6
RV7
LT-B3D090L
J8
J66
CN/RJ45_Nonshielded/1port_tab_down/black/DIP-8pin

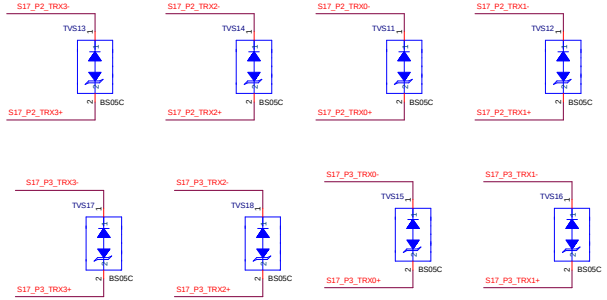
TVS13
TVS14
TVS11
TVS12
TVS17
TVS18
TVS15
TVS16
BS05C

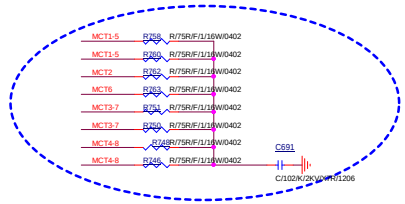
C/102K/2KV/X7R/1206
C691

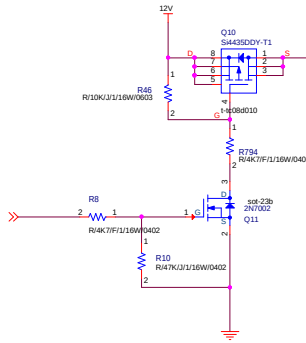
12V
Q10
Si4435DDY-T1
R46
R/10K/J/1/16W/0603
R781
R782
R/0R/J/1/10W/0603
R794
R/4K7/F/1/16W/0402
R8
R/4K7/F/1/16W/0402
R10
R/47K/J/1/16W/0402
Q11
2N7002

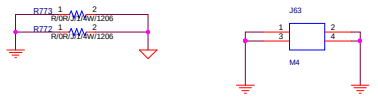
R773
R772
R/0R/J/1/4W/1206
J63
M4

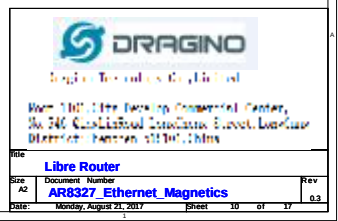
DRAGINO
Libre Router
AR8327_Ethernet_Magnetics
Monday, August 21, 2017
10
17

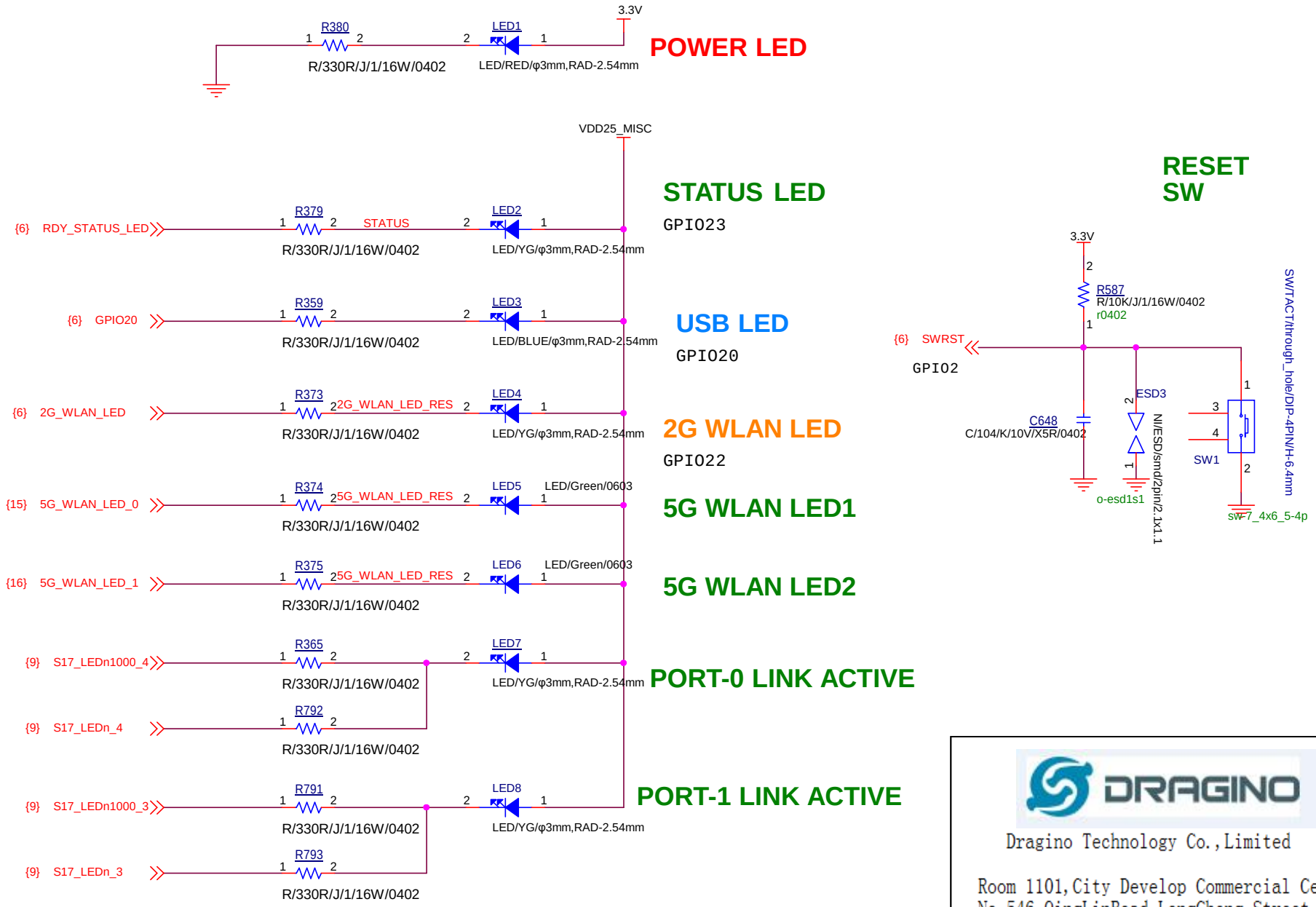

Dragino Technology Co.,Limited

Room 1101,City Develop Commercial Center,
No.546 QingLinRoad LongCheng Street,LongGang
District;Shenzhen 518101,China

Title	Libre Router	
Size: A4	Document Number: LED_RESET	Rev: 0.3
Date: Monday, August 21, 2017	Sheet 11 of 17	

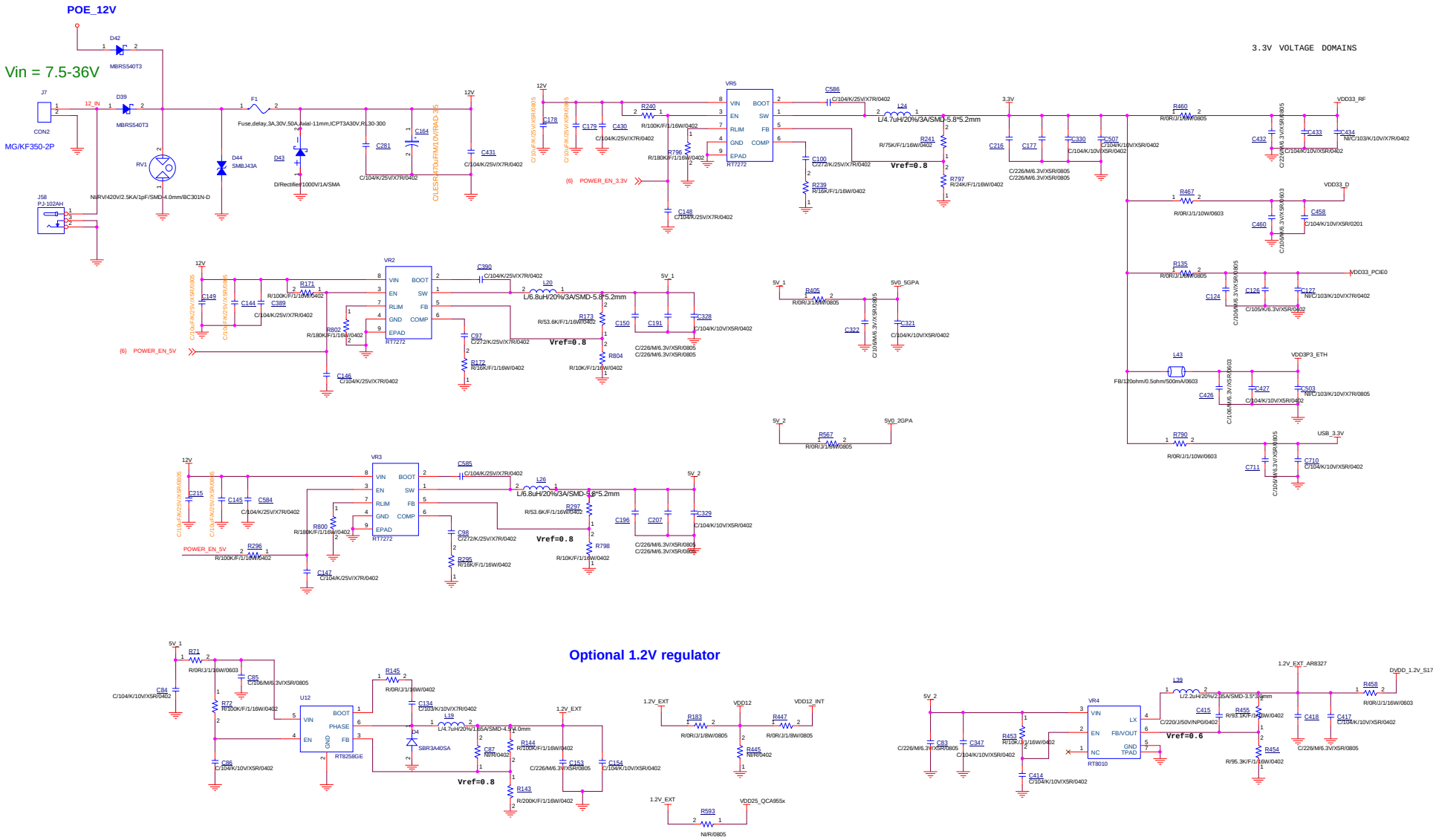
POE_12V
Vin = 7.5-36V
MG/KF350-2P
3.3V VOLTAGE DOMAINS
Optional 1.2V regulator
Vref=0.8
Vref=0.6
L/4.7uH/20%/3A/SMD-5.8*5.2mm
L/6.8uH/20%/3A/SMD-5.8*5.2mm
L/2.2uH/20%/2.6A/SMD-3.5*3.0mm
L/4.7uH/20%/1.6A/SMD-4.5*4.0mm
Libre Router
Power_Regulators
Monday, August 21, 2017
Sheet 12 of 17

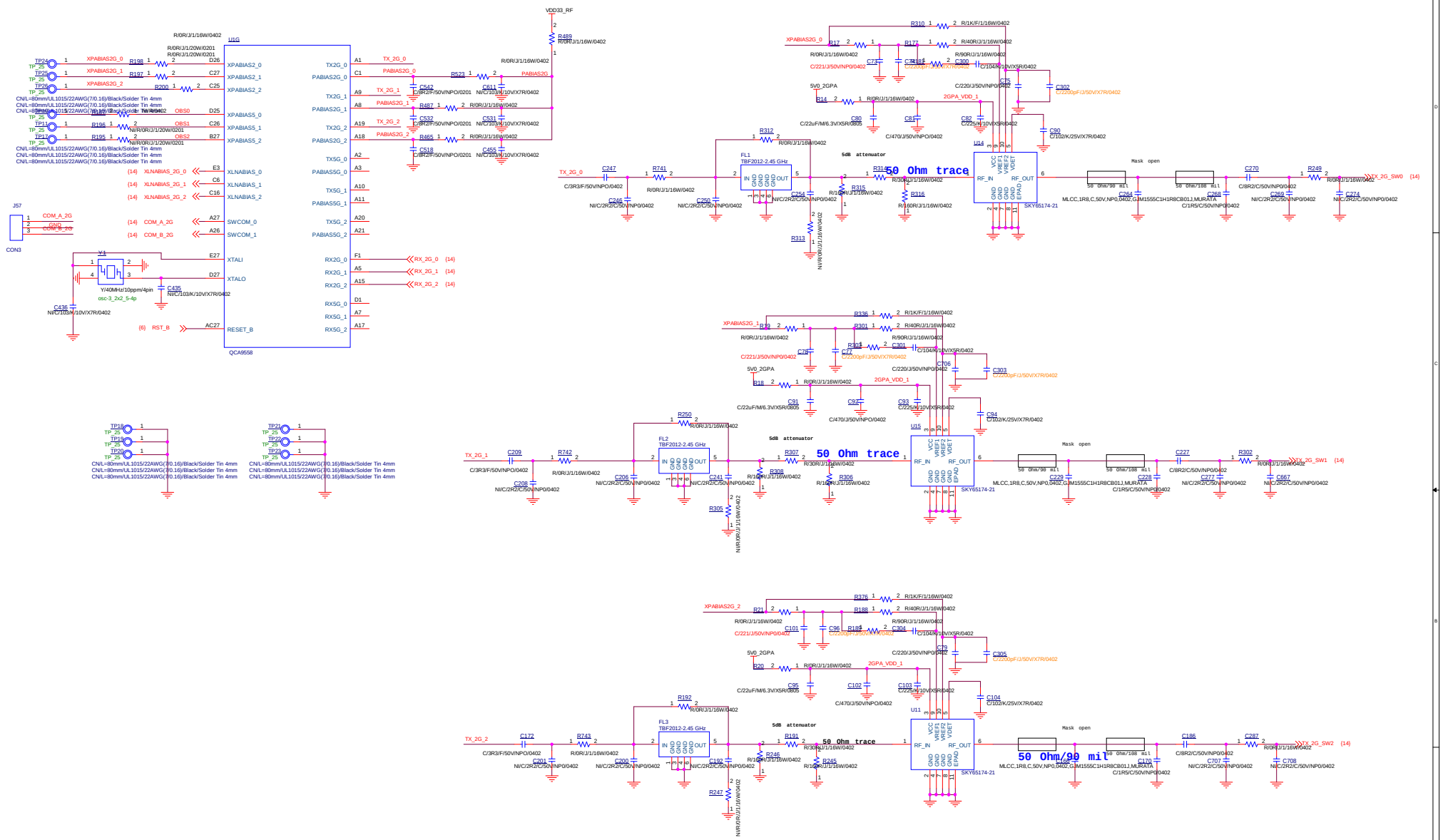
U1G
QCA9558
XPABIAS2_0
XPABIAS2_1
XPABIAS2_2
XPABIAS5_0
XPABIAS5_1
XPABIAS5_2
XLNABIAS_0
XLNABIAS_1
XLNABIAS_2
SWCOM_0
SWCOM_1
XTALI
XTALO
RESET_B
TX2G_0
PABIAS2G_0
TX2G_1
PABIAS2G_1
TX2G_2
PABIAS2G_2
TX5G_0
PABIAS5G_0
TX5G_1
PABIAS5G_1
TX5G_2
PABIAS5G_2
RX2G_0
RX2G_1
RX2G_2
RX5G_0
RX5G_1
RX5G_2
VDD33_RF
R/0R/J/1/16W/0402
R/0R/J/1/20W/0201
CON3
J57
Y/40MHz/10ppm/4pin
osc-3_2x2_5-4pin
50 Ohm trace
5dB attenuator
FL1
TBF2012-2.45 GHz
SKY65174-21
Mask open
50 Ohm/90 mil
FL2
FL3
XPABIAS2G_0
XPABIAS2G_1
XPABIAS2G_2
5V0_2GPA
2GPA_VDD_1
TX_2G_0
TX_2G_1
TX_2G_2
TX_2G_SW0
TX_2G_SW1
TX_2G_SW2
RX_2G_0
RX_2G_1
RX_2G_2
RST_B
COM_A_2G
COM_B_2G
CN/L=80mm/UL1015/22AWG(7/0.16)/Black/Solder Tin 4mm
DRAGINO
Libre Router
2G RF_QCA9558
Monday, August 21, 2017
Sheet 13 of 17

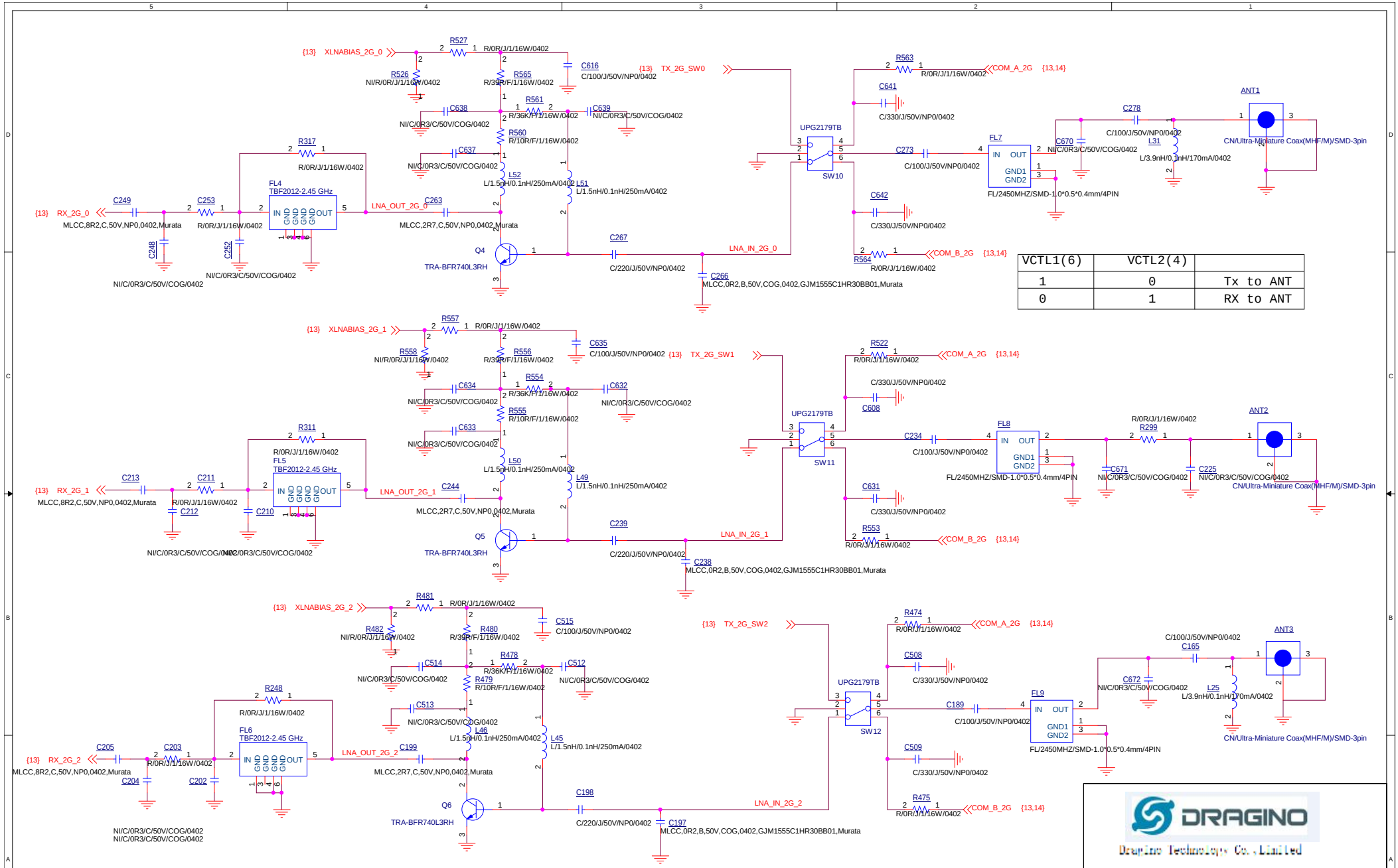

VCTL1(6)	VCTL2(4)	
1	0	Tx to ANT
0	1	RX to ANT

DRAGINO

Dragino Technology Co.,Limited

Room 1101,City Develop Commercial Center,
No.546 QingLinRoad LongCheng Street,LongGang
District,Shenzhen 518101,China

Title	Libre Router	
Size A3	Document Number 2G RX_ANT switch	Rev 0.3
Date: Monday, August 21, 2017	Sheet 14 of 17	

PCIE0 CONNECTOR FOR RC1

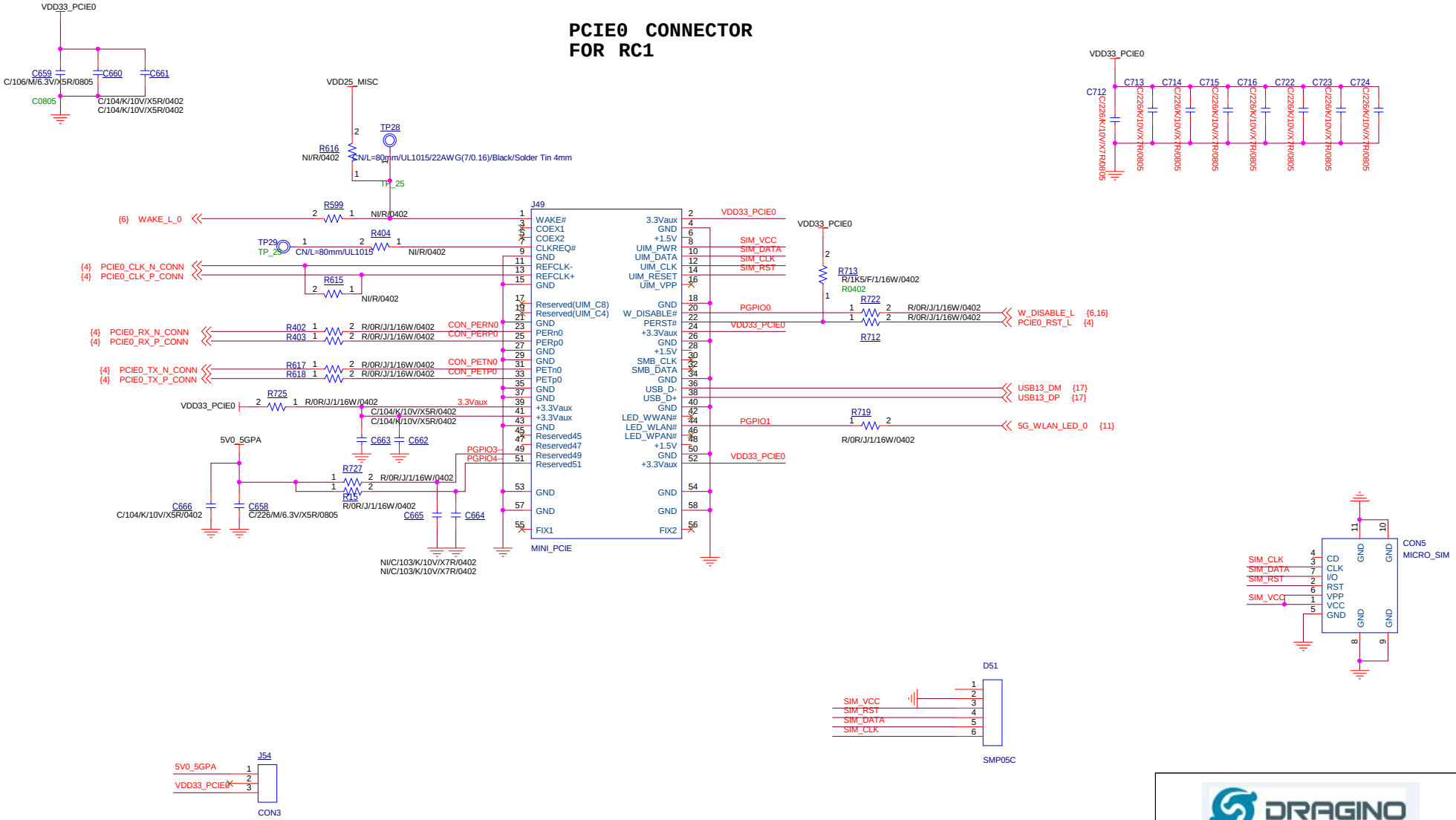

Dragino Technology Co., Limited

Room 1101, City Develop Commercial Center,
No. 916 QingLinRoad LongCheng Street, LongGang
District, Shenzhen 518101, China

Title	Libre Router	
Size A3	Document Number: PCIe_connector_RC1	Rev 0.3
Date: Monday, August 21, 2017	Sheet 15 of 17	

PCIE0 CONNECTOR FOR RC1

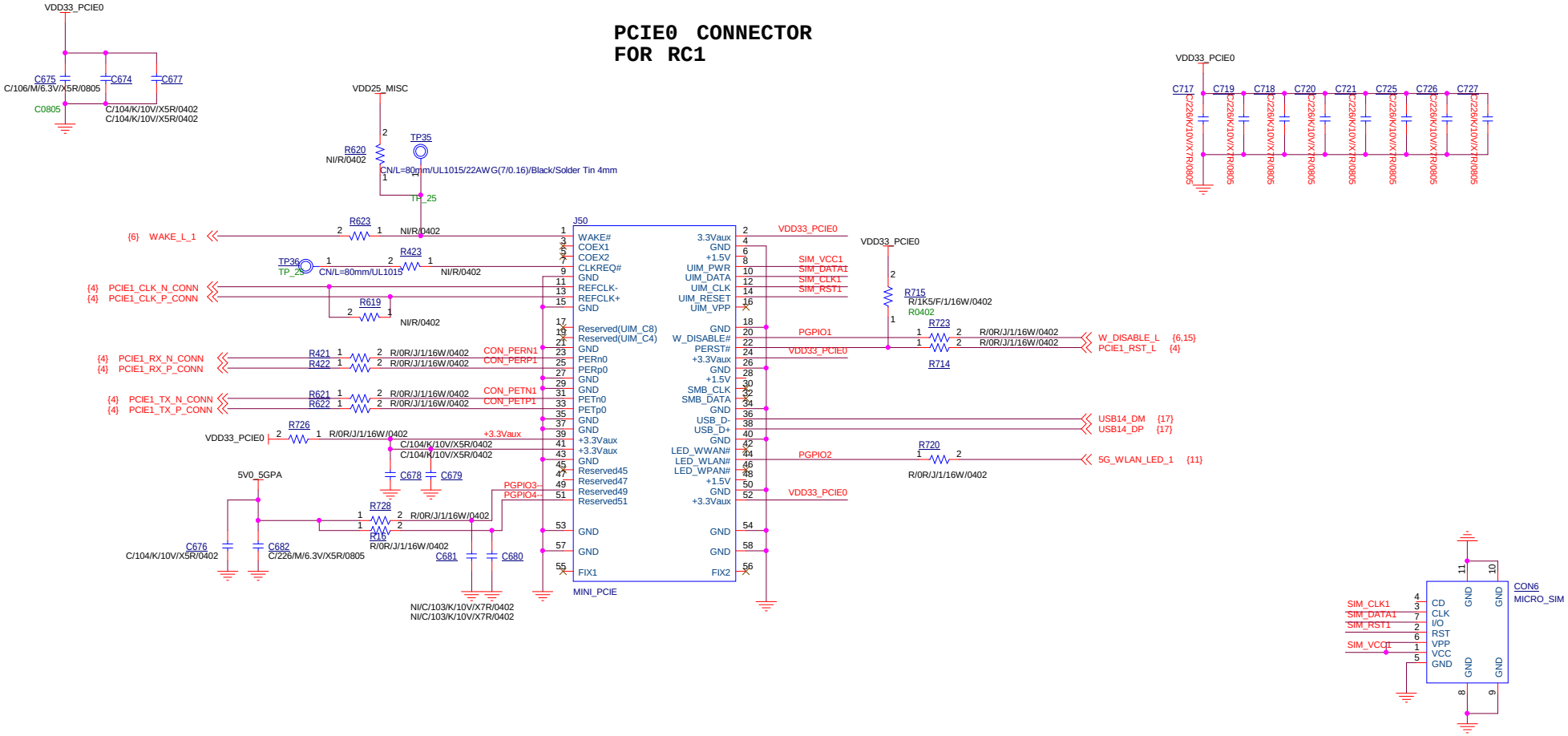

DRAGINO
Dragino Technology Co., Limited
Room 1101, City Develop Commercial Center,
No. 916 QingLinRoad LongCheng Street, LongGang
District, Shenzhen 518101, China

Title	Libre Router	
Size A3	Document Number: PCIe_connector_RC1	Rev 0.3
Date: Monday, August 21, 2017	Sheet 16 of 17	

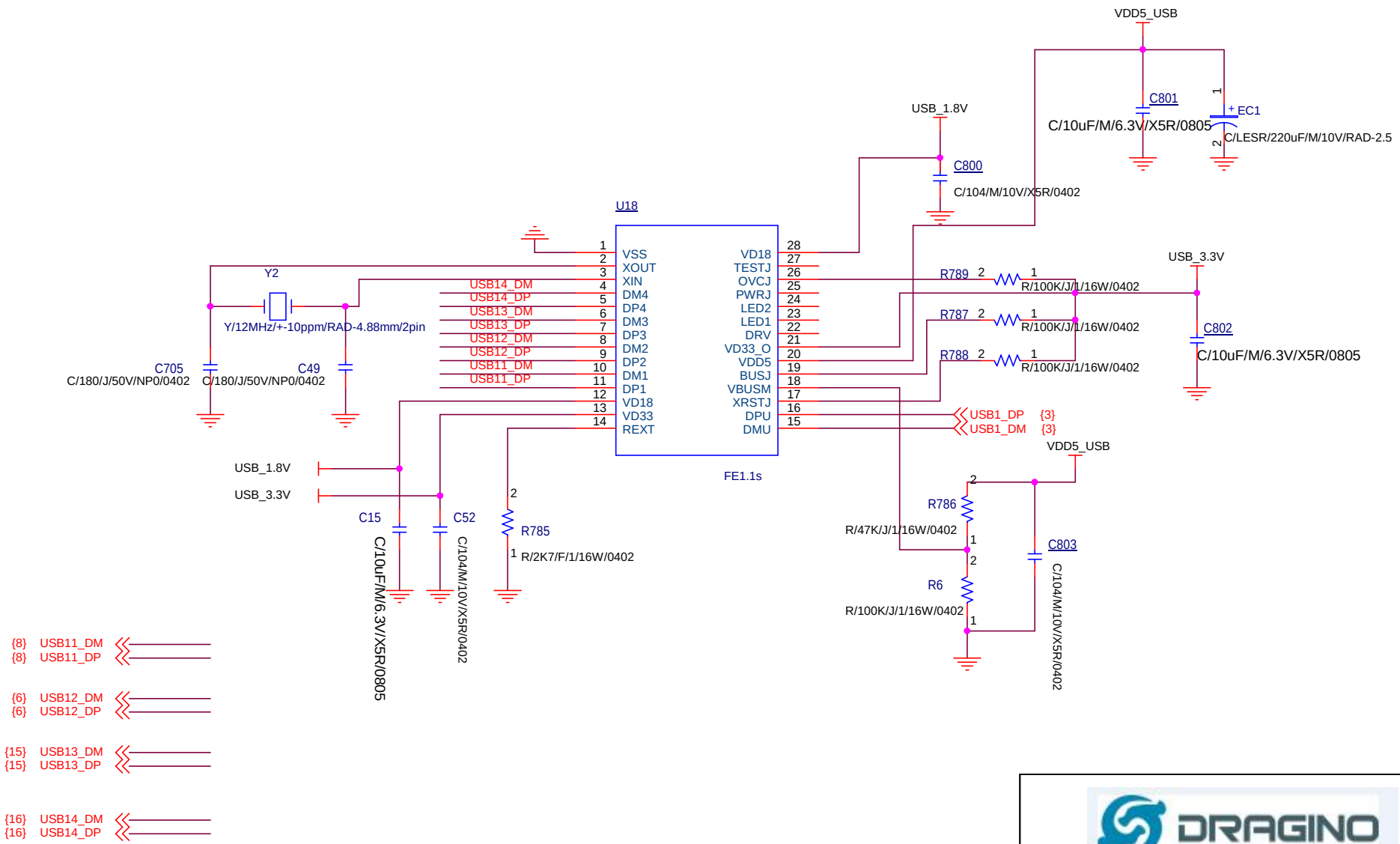

Dragino Technology Co.,Limited

Room 1101,City Develop Commercial Center,
No.546 QingLinRoad LongCheng Street,LongGang
District;Shenzhen 518101,China

Title	Libre Router	
Size: A4	Document Number: USB-HUB	Rev: 0.3
Date: Monday, August 21, 2017	Sheet 17 of 17	