MAC0325 Combinatorial Optimization

Assignment 1

Pedrog Gigeck Freire
10737136

October 06, 2020

Exercise 6

Given a digraph $D = (V, A, \varphi)$ and a cost function $c : A \to \mathbb{R}$ and $r, s \in V$.
We adopt the notation $v_i = (v, i)$ for $v \in V$, $i \in \mathbb{Z}$.
Let $D' := (V', A', \varphi')$ be a digraph with

$$V' := V \times \{0, 1\}$$

$$A' := A \times \{0, 1\}$$

$$\varphi' : A' \to V' \times V' \text{ given by}$$

$$\varphi'((a, i)) := \begin{cases} (u_0, w_1) & \text{if } i = 0, \text{ where } \varphi(a) = (u, w) \\ (u_1, w_0) & \text{if } i = 1, \text{ where } \varphi(a) = (u, w) \end{cases}$$

Figure (1) is an example of D' obtained from an original digraph D.

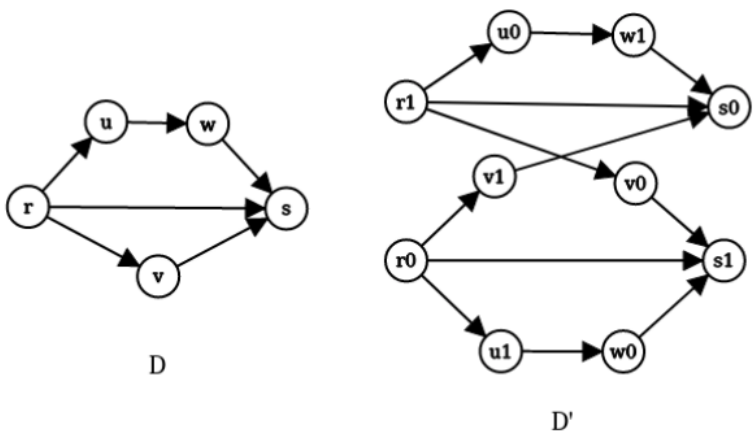

Figure 1: Example of transformation from D to D'.

Let $c' : A' \to \mathbb{R}$ be a cost function given by $c'((a, i)) := c(a)$.
We define the following instance of the shortest walk problem:

$$\text{(6.2)} \qquad \begin{array}{ll} \text{Minimize} & c'(W) \\ \text{subject to} & W \text{ is an } (r_0, s_0)\text{-walk in } D' \end{array}$$

We claim that problem (6.2) and problem (6.1) (given in the exercise) are homomorphically equivalent.

To prove it, we need to define some notation:

Let $W_2(D)$ be the set of all walks in D that have even length.

Let $V_0' := \{(v, 0), v \in V\}$ be a subset of V'.

Let $W_0(D') := \{(u_0, w_0)\text{-walks in } D' : u_0, w_0 \in V_0'\}$ be the set of all walks in D' that starts in V_0' and ends in V_0'.

Let X be the set of feasible solutions of problem (6.1), i.e., the set of (r, s)-walks in D that have even length.

Let Y be the set of feasible solutions of problem (6.2), i.e., the set of (r_0, s_0)-walks in D'.

From now on, v_i denotes the vertices of V and (v_i, j) denotes de vertices of V'.

Let $\xi : W_2(D) \to W_0(D')'$ be a function defined recursively by:

Given $W := \langle v_0, a_1, v_1, ..., a_l, v_l\rangle \in W_2(D)$,

$$\begin{aligned}
\xi(\langle v_0\rangle) &:= \langle (v_0, 0)\rangle && \text{if } l = 0\\
\xi(\langle v_0, a_1, v_1, a_2, v_2\rangle) &:= \langle (v_0, 0), (a_1, 0), (v_1, 1), (a_2, 1), (v_2, 0)\rangle && \text{if } l = 2\\
\xi(\langle v_0, a_1, v_1, ..., a_l, v_l\rangle) &:= \xi(\langle v_0, ..., v_2\rangle)\cdot \xi(\langle v_2, ..., v_l\rangle && \text{if } l > 2
\end{aligned}$$

It is simple to verify by induction that if $W \in W_2(D)$ is a (u, w)-walk in D then $\xi(W)$ is a (u_0, w_0)-walk in D', so $\xi(W) \in W_0(D')$ and the function ξ is, indeed, a (well defined) function.

Let $\phi : X \to Y$ be a function given by $\phi(W) := \xi(W)$

Lemma 1. *ϕ is a homomorphism from (6.1) to (6.2).*

Proof. Given $W \in X$, the length of W is equal to the length of $\phi(W)$, and the arcs in both walks have the same costs. Formally,

$$\begin{aligned}
c'(\phi(W)) &= \sum_{(a,i)\in A(\phi(W))} c'((a, i))\\
&= \sum_{a\in A(W)} c(a) = c(W)
\end{aligned}$$

So $W \in L_{(6.1)}(\mu) \implies c(W) \le \mu \implies c'(\phi(W)) \le \mu$.

Then $\phi(W) \in L_{(6.2)}(\mu)$. So ϕ is a homomorphism . □

Proposition 2. *Every walk $W \in W_0(D')$ has even length.*

Proof. Let $W \in W_0(D')$, let l be the length of W. We prove by induction on l.

If $l = 0$, then l is even.

There is no walk in $W_0(D')$ of length 1, because every arc with origin in V_0' ends in an arc of the form $(v, 1)$, by the definition of the incidence function φ'.

Suppose that $l \ge 2$, and every walk $W' \in W_0(D')$ of length $l' < l$ has even length (l' is even).

Let $W = \langle (v_0, 0), (a_1, 0), (v_1, 1), (a_2, 1), (v_2, 0)..., (a_l, 1), (v_l, 0)\rangle$. Suppose by the sake of contradiction that l is odd. Let $W' := \langle (v_2, 0), ..., (a_l, 1), (v_l, 0)\rangle$, then W' has odd length $l' = l - 2$, but $l' < l$ and $W' \in W_0(D')$, contradiction. □

Let $\chi : W_0(D') \to W_2(D)$ be a function defined by, given $W' \in W_0(D')$ with length l:

$$\begin{aligned}
\chi(\langle(v_0,0)\rangle) &:= \langle v_0\rangle && \text{if } l = 0\\
\chi(\langle(v_0,0),(a_1,0),(v_1,1),(a_2,1),(v_2,0)\rangle) &:= \langle v_0,a_1,v_1,a_2,v_2\rangle && \text{if } l = 2\\
\chi(\langle(v_0,0),(a_1,1),(v_1,1),...,(a_l,1),(v_l,0)\rangle) &:= \chi(\langle(v_0,0),...,(v_2,0)\rangle)\cdot\\
&\qquad \chi(\langle(v_2,0),...,(v_l,0)\rangle && \text{if } l > 2
\end{aligned}$$

We can notice that χ is well defined directly from proposition (2) (every walk in $W_0(D')$ has even length).

Let $\psi : Y \to X$ be a function given by $\psi(W') := \chi(W')$

Lemma 3. *ψ is a homomorphism from (6.2) to (6.1).*

Proof. Given $W' \in Y$, the length of W' is equal to the length of $\psi(W')$, and the arcs in both walks have the same costs. Formally,

$$\begin{aligned}
c(\psi(W')) &= \sum_{a\in A(\psi(W'))} c(a)\\
&= \sum_{(a,i)\in A(W')} c'(a,i) = c'(W')
\end{aligned}$$

So $W' \in L_{(6.2)}(\mu) \implies c'(W') \le \mu \implies c(\psi(W')) \le \mu$.
Thus $\psi(W') \in L_{(6.1)}(\mu)$. So ψ is a homomorphism. □

Theorem 1. *Problems (6.1) and (6.2) are homomorphically equivalent.*

Proof. Imediate from lemmas (1) and (3) □

Exercise 9

We will write a compact proof that needs to be read carefully in both directions. Each step comes straightforward from definitions.

For each $x \in X$, take $\mu := f(x)$.

$$\begin{aligned}
\varphi \text{ homomorphism } &\implies \varphi(L_{\mathcal{O}}(\mu)) \subseteq L_{\mathcal{P}}(\mu)\\
&\iff \varphi(\{x \in X : \alpha f(x) \ge \alpha\mu\}) \subseteq L_{\mathcal{P}}(\mu)\\
&\iff \varphi(\{x \in X : \alpha f(x) \ge \alpha f(x)\}) \subseteq L_{\mathcal{P}}(\mu)\\
&\iff \varphi(X) \subseteq L_{\mathcal{P}}(\mu)\\
&\iff \varphi(X) \subseteq L_{\mathcal{P}}(f(x))\\
&\iff \varphi(X) \subseteq \{y \in Y : \alpha g(y) \ge \alpha f(x)\}\\
&\iff \varphi(x) \in \{y \in Y : \alpha g(y) \ge \alpha f(x)\}, \forall x \in X\\
&\iff \alpha g(\varphi(x)) \ge \alpha f(x), \forall x \in X
\end{aligned}$$

The only step that is not straightforward is the way back of the first implication.

We have that $\varphi(L_{\mathcal{O}}(\mu)) \subseteq L_{\mathcal{P}}(\mu)$ for every μ of the form $\mu = f(x)$ but not for every $\mu \in \mathbb{R}$.

But we claim thar being valid in the range of f is sufficient to be valid in the whole real set. Let $\nu \in \mathbb{R}$ be any real number, so $L_{\mathcal{O}}(\nu) = \{x \in X : \alpha f(x) \geq \alpha\nu\}$. So every element in $L_{\mathcal{O}}(\nu)$ has a value in f greater or equal than some other value. We may take the greatest value of these, say $f(x*)$ and $L_{\mathcal{O}}(\nu) \subseteq L_{\mathcal{O}}(f(x*))$

Thus φ will be, indeed, a homomorphism.

Exercise 12

In each iteration of the **for** loop, we list the matching $\mathbf{M_t}$ that is already defined in the beggining of the iteration and the augmenting path found in the end of the iteration (this path generates the next matching M_{t+1})

$\boldsymbol{t}$	$\boldsymbol{M_t}$	**Augmenting Path found**
0	$\emptyset$	$\langle a, A\rangle$
1	$\{(a, A)\}$	$\langle b, B\rangle$
2	$\{(a, A), (b, B)\}$	$\langle c, D\rangle$
3	$\{(a, A), (b, B), (c, D)\}$	$\langle f, C\rangle$
4	$\{(a, A), (b, B), (c, D), (f, C)\}$	$\langle g, E\rangle$
5	$\{(a, A), (b, B), (c, D), (f, C), (g, E)\}$	$\langle h, F\rangle$
6	$\{(a, A), (b, B), (c, D), (f, C), (g, E), (h, F)\}$	$\langle i, I\rangle$
7	$\{(a, A), (b, B), (c, D), (f, C), (g, E), (h, F), (i, I)\}$	$\langle d, A, a, B, b, C, f, H\rangle$
8	$\{(a, B), (b, C), (c, D), (d, A), (f, H), (g, E), (h, F), (i, I)\}$	-

In the end of algorithm, the vertex cover found is the set $\{b, f, g, h, A, B, D, I\}$

Exercise 13

Let G be a (U, W)-bipartite graph

Lemma 4 ($(i) \implies \neg(ii)$)**.** *If G has a matching that saturates U, then $|S| \leq |N(S)|$ for each $S \subseteq U$.*

Proof. Let M be a matching in G that saturates U. For each $s \in S$ there is an edge $e \in M$ that connects s with one unique $w \in W$. So there are at least $|S|$ vertices in $N(S)$. □

Lemma 5 ($\neg(i) \implies (ii)$)**.** *If no matching in G saturates U, then there is a subset $S \subseteq U$ such that $|S| > |N(S)|$.*

Proof. Let M be a maximum matching in G. By hyposthesis, there are vertices in U that are not saturated by M.

Let $R \coloneqq \{v \in V :$ there is $u \in U \setminus V_M$ such that $u \rightsquigarrow v\}$ be the set (defined in the algorithm) of vertices reacheable from unsaturated vertices in U.

Let $S \coloneqq U \cap R$. We have that $N(S) \subset (R \cap W)$, by definition of R (the reacheable vertices)

Since M is maximum, the algorithm correctness implies that every vertice in $N(S)$ is saturates , because if there was one unsaturated, there would be an augmenting path and M would not be maximum.

So, for every vertice in $N(S)$ there is one unique vertice in $(S \cap V_M$ (the other end of the matching edge). From this we get that $|S \cap V_M| = |N(S)|$.

But there is at least one vertice in S that is not in $S \cap V_M$. Therefore $|S| > |S \cap V_M| = |N(S)|$. □

From the law of excluded middle. We may divide our exercise in two cases:

Case 1: (i) holds. From lemma 4, we have that (ii) fails, thus exactly one of the options holds.

Case 2: (i) fails. From lemma 5, we have that (ii) holds, thus exactly one of the options holds.