HORIZONTAL POSITION

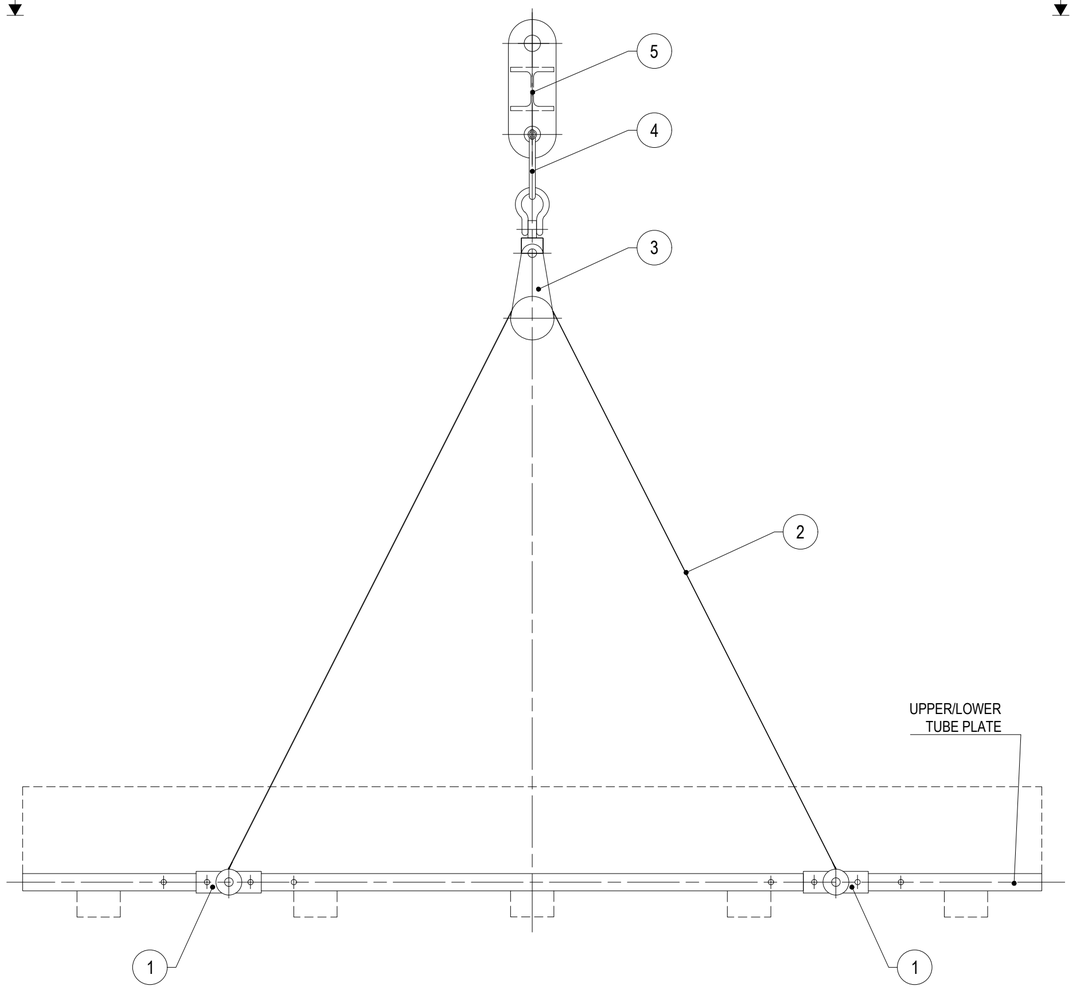

VERTICAL POSITION

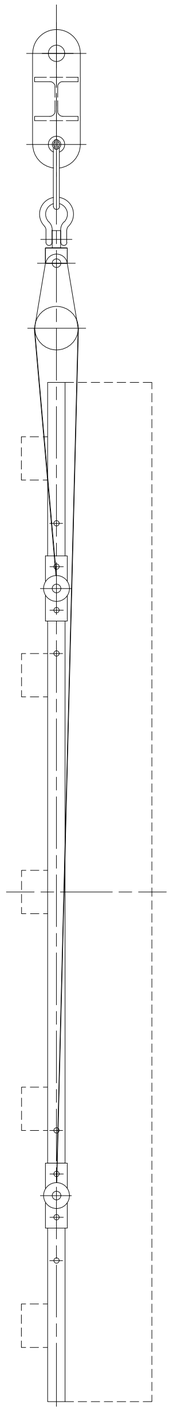

POS. 2

1 : 5

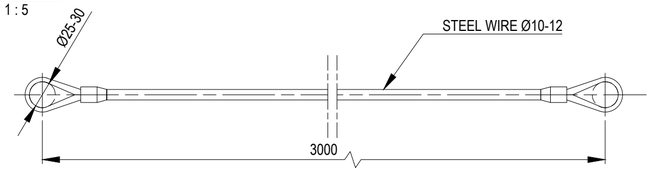

POS. 5

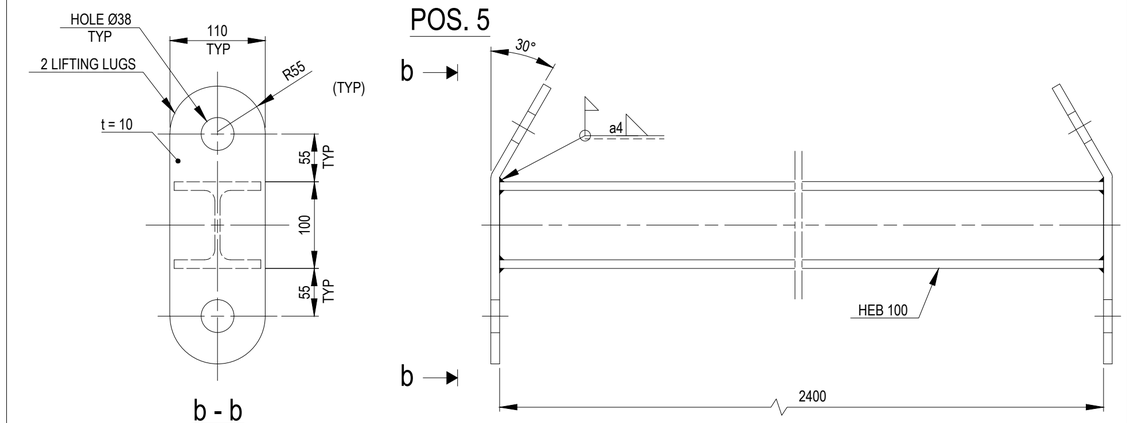

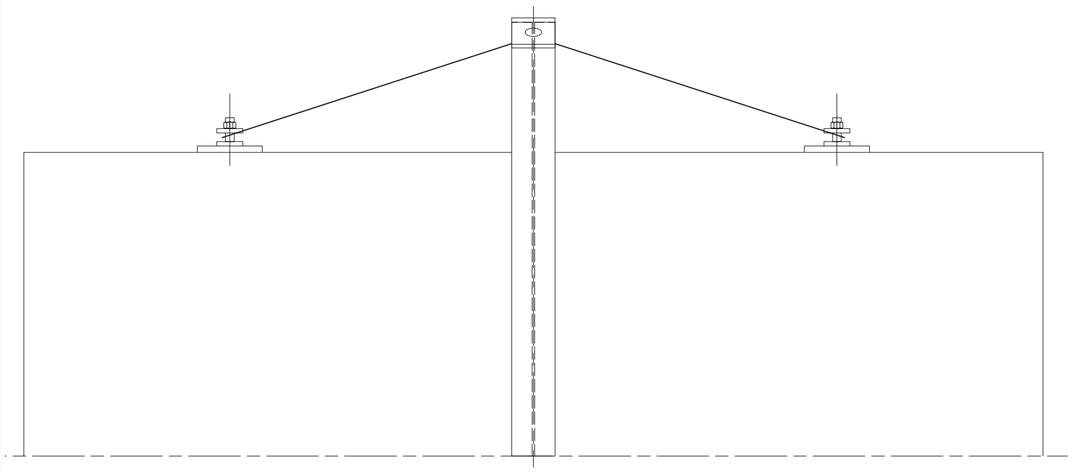

a - a

NOTES:

1) WLL - MIN. 3T.

2) CERTIFICATE 2.2/EN 10204
OR SIMILAR REQUIRED.

3) "WLL 6T"
TO BE SPECIFIED ON LIFTING RIG POS. 5.

4) PAINTING OF POS. 4 ACC. TO
TOPSOE SPEC. NO.390 AND STATED IN P.O.

5) SHACKLE TYPE G-4163. WLL 6,5 TONS.

MW 2110

KT ENAP TECNIMONT

PROJ.: K484
OWNER: ENAP
CONTRACTOR: KT / TCM Chile

CONTRACTOR APPROVAL CODE
- ☐ 1 REJECTED
- ☐ 2 APPROVED WITH COMMENTS
- ☒ 3 APPROVED WITHOUT COMMENTS
- ☐ 4 FOR INFORMATION ONLY

1 MR N°: 4100–01
PO N°: 7500113900
EQUIPMENT: C–3808

U.O.: KT S.p.A.
BY: AL DATE: 28/01/25

KT Doc. CODE: K484–0000–0000–MR–4100–01–C3808–CA1109–0017 Rev. 1

POS	NO	DESCRIPTION	MATERIAL	NOTES
5	1	LIFTING RIG	S355J2N	2), 3)
4	2	SHACKLE		5)
3	2	SINGLE SNATCH BLOCK WITH HOOK		1)
2	2	STEEL WIRE WITH THIMBLES AND WIRE LOCKS	WLL 1.7T	
1	4	LIFTING LUG		REF.NO. 98.11

REFERENCE DOCUMENTS

TEXT	REF. NO.
LIFTING LUG FOR UPPER AND LOWER TUBE PLATE	98.11

TOPSOE

Information contained herein is confidential; it may not be used for any purpose other than for which it has been issued, and may not be used by or disclosed to third parties without written approval of Topsoe A/S.

REV.	DESCRIPTION	DATE	DRAWN	CHKD.	APPD.
1	Revised as indicated	Jan 23, 2025	KLPN	NMO	NMO
0	First issue	DEC 21, 2023	ELAS	GARG	GARG

ENAP, Chile
WSA plant for Aconcagua Refinery

WSA condenser
Lifting accessories for installation of
tube plates on tube module

REF. NO. 98.10

DWG. SIZE: A2
SCALE: 1 : 10, 1 : 5
ITEM NO.: C-3808

DOCUMENT ID
S-05846 — JOB NO.
WSC53109-9810 — DOCUMENT NUMBER
1 — REV.

(HORIZONTAL ASSEMBLY) WSC53109-9810 rev. 3 Vault rev.0 TT-735-EN (A)

Approved