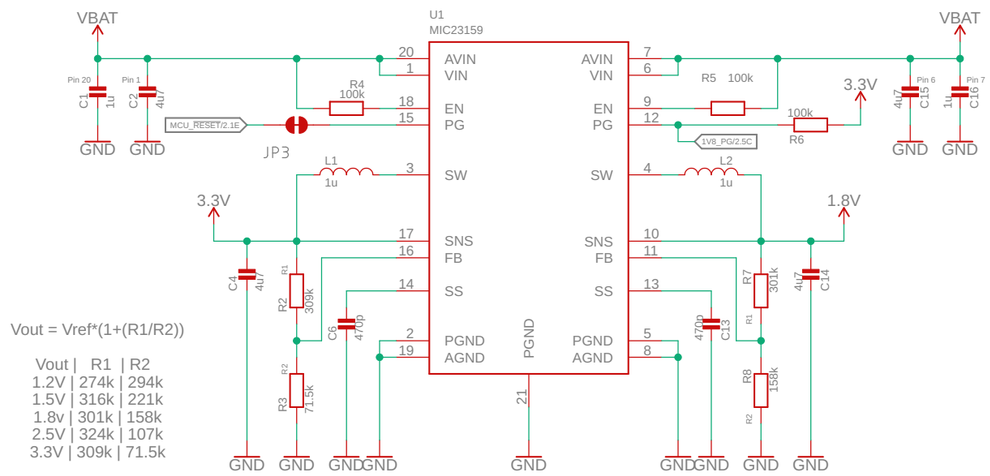

Vout = Vref*(1+(R1/R2))

Vout	R1	R2
1.2V	274k	294k
1.5V	316k	221k
1.8v	301k	158k
2.5V	324k	107k
3.3V	309k	71.5k

Supply Regulator

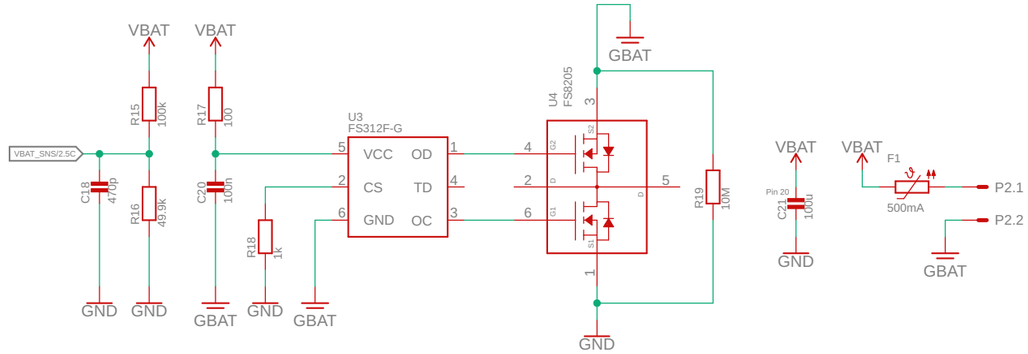

ADC Ref: 1.43V VBAT_SNS = 1.43V @ VBAT = 4.295V

Battery Protection Circuit

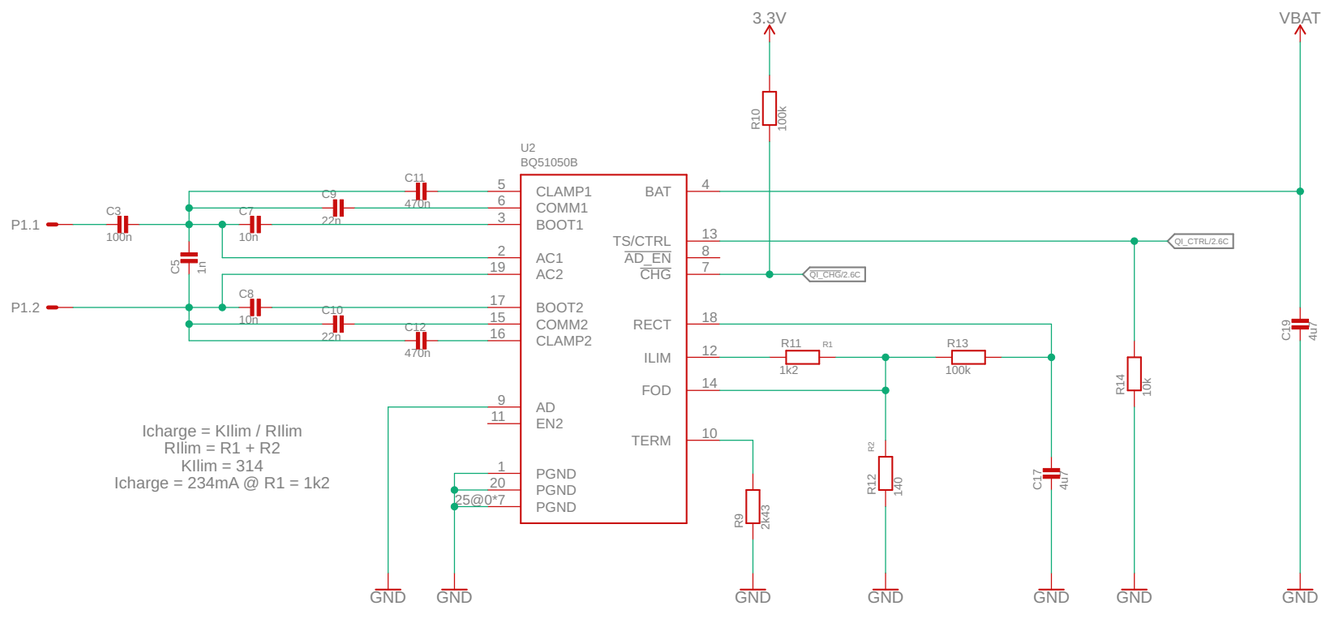

Icharge = KIlim / RIlim
RIlim = R1 + R2
KIlim = 314
Icharge = 234mA @ R1 = 1k2

QI Charger

IPLeiria Logo

TITLE: haptic-control		
Design by: Rafael Silva, Joao Silva	Company: Tech4Home	REV: v0.0
Date: 13/05/19 18:10	Sheet: 1/4	

Copyright © 2019 Tech4Home
This file can not be copied and/or distributed without express permission

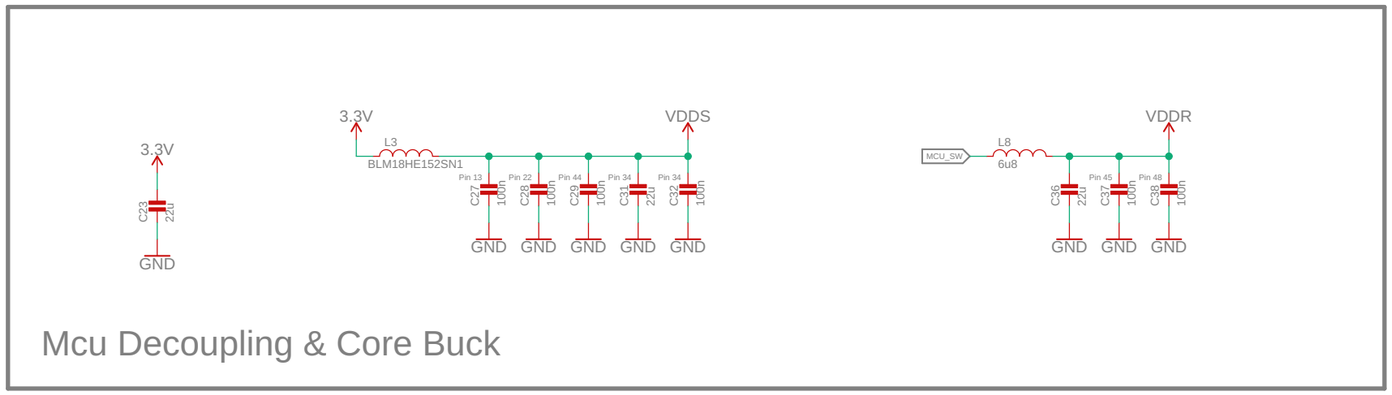

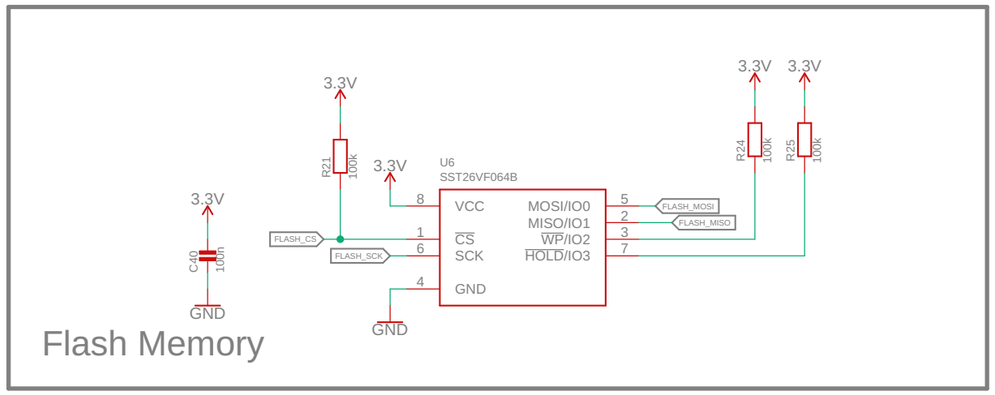

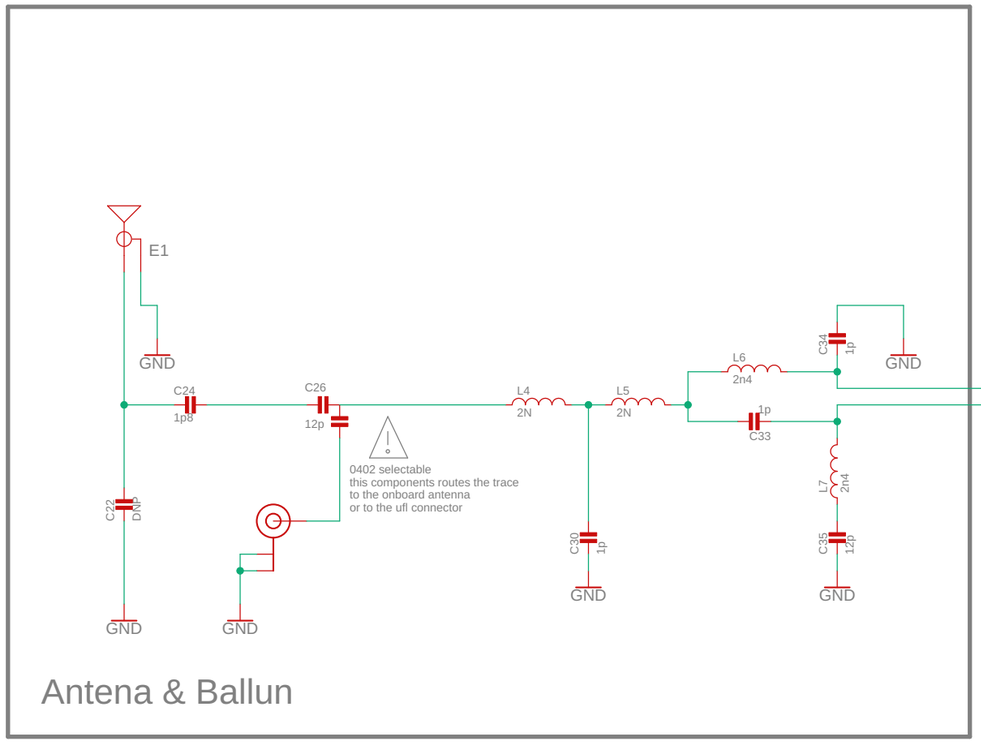

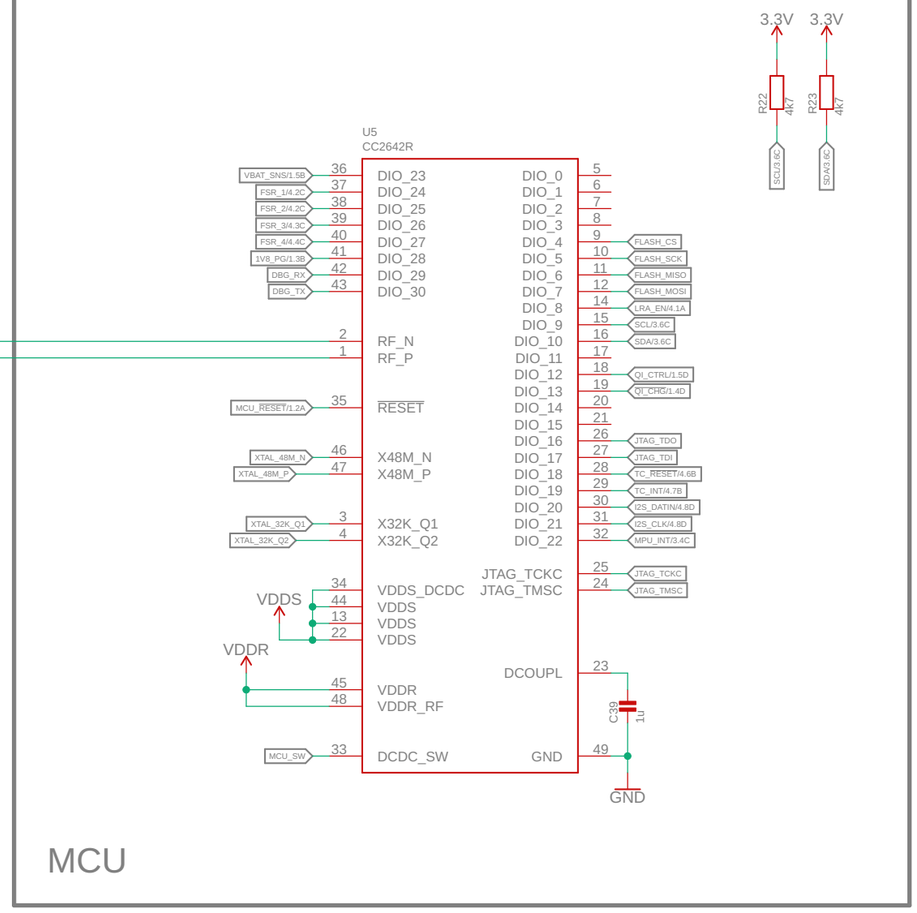

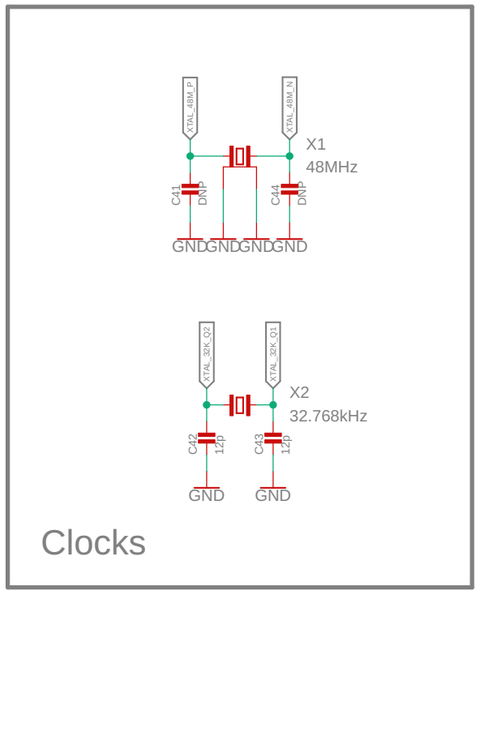

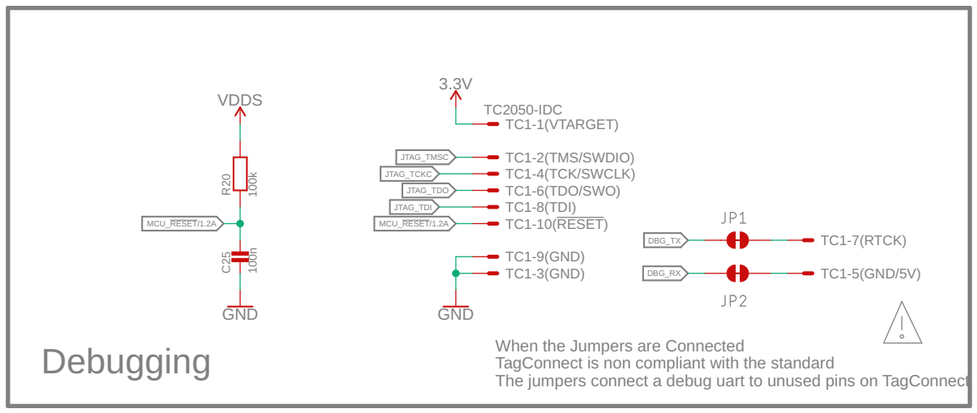

TITLE: haptic-control		
Design by: Rafael Silva, Joao Silva	Company: Tech4Home	REV: v0.0
Date: 13/05/19 18:10	Sheet: 2/4	

Copyright © 2019 Tech4Home
This file can not be copied and/or distributed without express permission

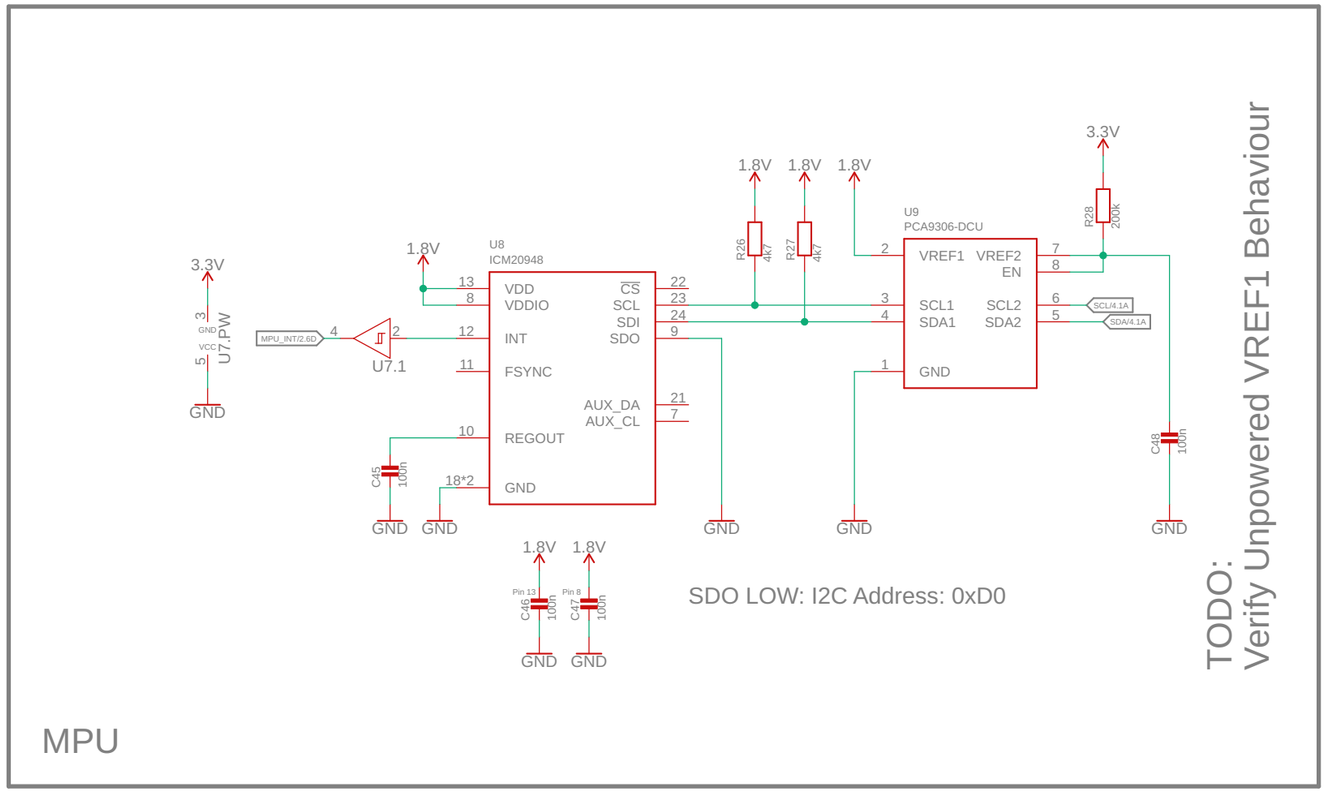

TITLE: haptic-control		
Design by: Rafael Silva, Joao Silva	Company: Tech4Home	REV: v0.0
Date: 13/05/19 18:10	Sheet: 3/4	

Copyright © 2019 Tech4Home
This file can not be copied and/or distributed without express permission

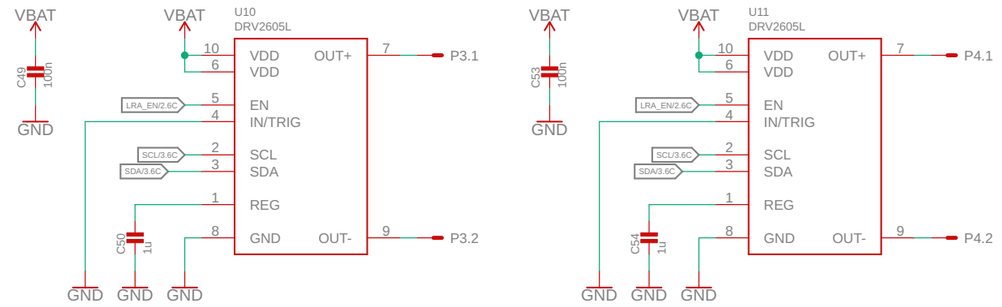

LRA Haptic FB

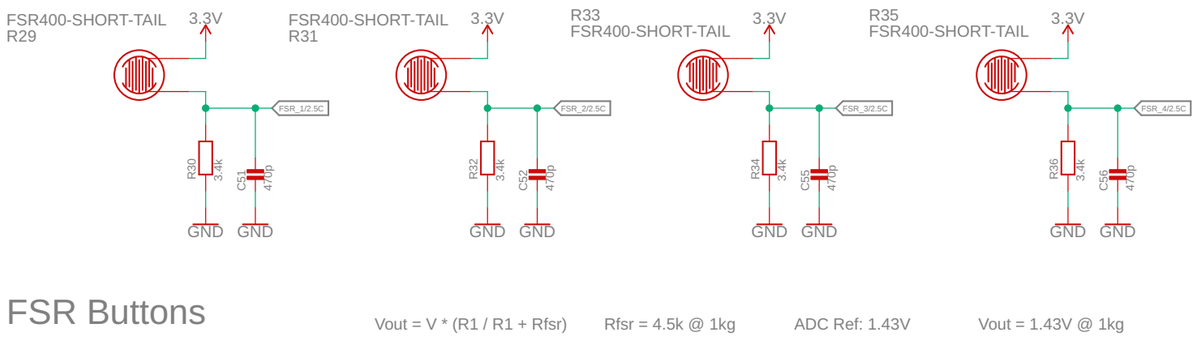

FSR Buttons

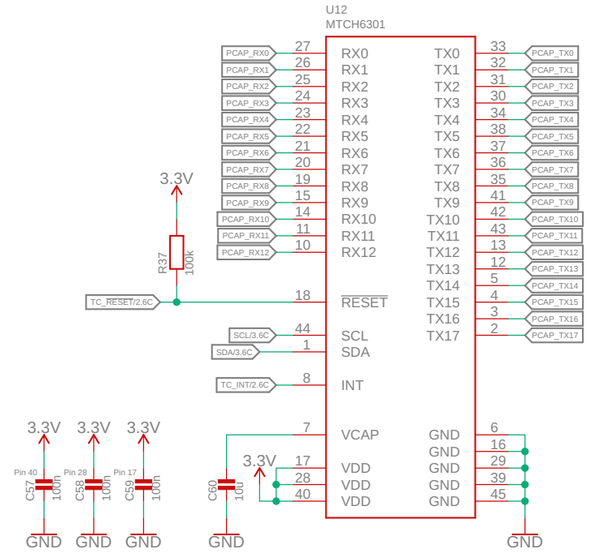

Touch Controller

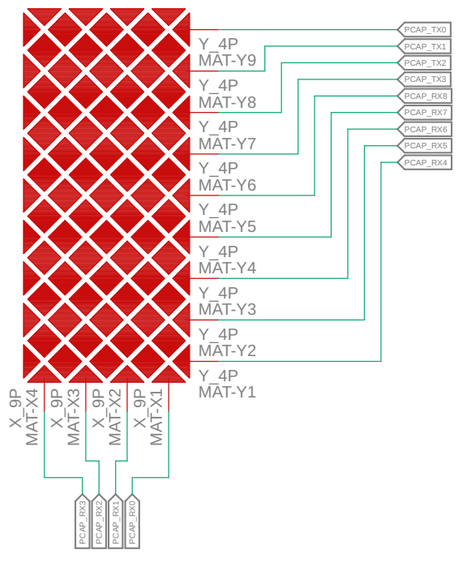

TODO:
Capacitive Matrix

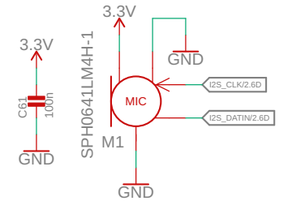

Microphone

TITLE: haptic-control		
Design by: Rafael Silva, Joao Silva	Company: Tech4Home	REV: v0.0
Date: 13/05/19 18:10	Sheet: 4/4	

Copyright © 2019 Tech4Home
This file can not be copied and/or distributed without express permission