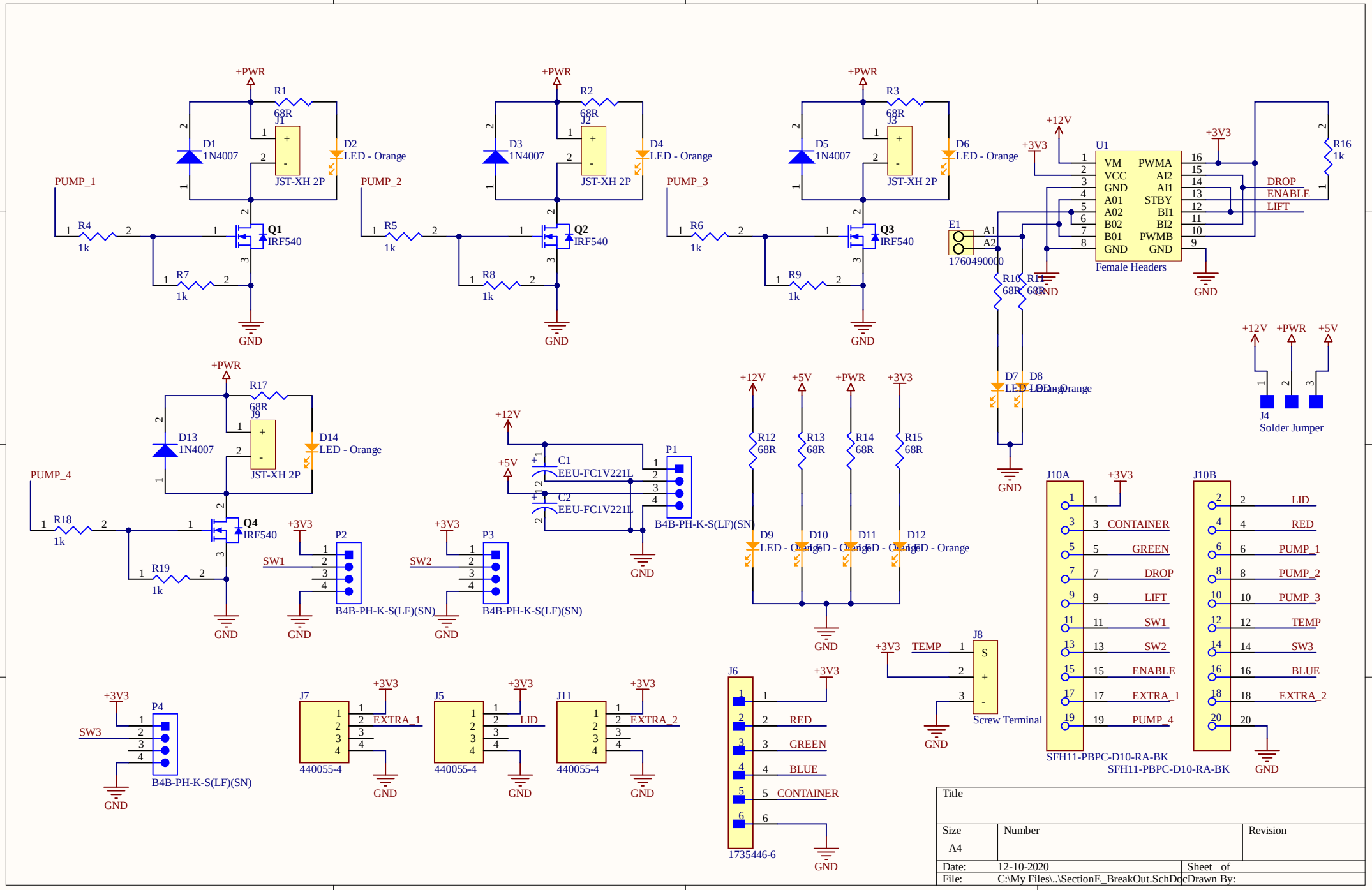
+PWR
R1
68R
J1
D1
1N4007
D2
LED - Orange
JST-XH 2P
PUMP_1
R4
1k
Q1
IRF540
R7
1k
GND
R2
68R
J2
D3
1N4007
D4
LED - Orange
PUMP_2
R5
1k
Q2
IRF540
R8
1k
R3
68R
J3
D5
1N4007
D6
LED - Orange
PUMP_3
R6
1k
Q3
IRF540
R9
1k
+12V
+3V3
U1
VM
VCC
GND
A01
A02
B02
B01
GND
PWMA
AI2
AI1
STBY
BI1
BI2
PWMB
GND
Female Headers
DROP
ENABLE
LIFT
R16
1k
E1
A1
A2
1760490000
R10
68R
R11
68R
D7
D8
LED - Orange
+12V
+PWR
+5V
J4
Solder Jumper
R17
68R
J9
D13
1N4007
D14
LED - Orange
PUMP_4
R18
1k
Q4
IRF540
R19
1k
SW1
P2
B4B-PH-K-S(LF)(SN)
SW2
P3
B4B-PH-K-S(LF)(SN)
C1
EEU-FC1V221L
C2
EEU-FC1V221L
P1
B4B-PH-K-S(LF)(SN)
R12
68R
R13
68R
R14
68R
R15
68R
D9
D10
D11
D12
LED - Orange
J10A
J10B
CONTAINER
GREEN
DROP
LIFT
SW1
SW2
ENABLE
EXTRA_1
PUMP_4
LID
RED
PUMP_1
PUMP_2
PUMP_3
TEMP
SW3
BLUE
EXTRA_2
SFH11-PBPC-D10-RA-BK
SFH11-PBPC-D10-RA-BK
J8
S
Screw Terminal
TEMP
P4
SW3
B4B-PH-K-S(LF)(SN)
J7
EXTRA_1
440055-4
J5
LID
440055-4
J11
EXTRA_2
440055-4
J6
RED
GREEN
BLUE
CONTAINER
1735446-6
Title
Size
A4
Number
Revision
Date:
12-10-2020
Sheet of
File:
C:\My Files\..\SectionE_BreakOut.SchDoc
Drawn By: