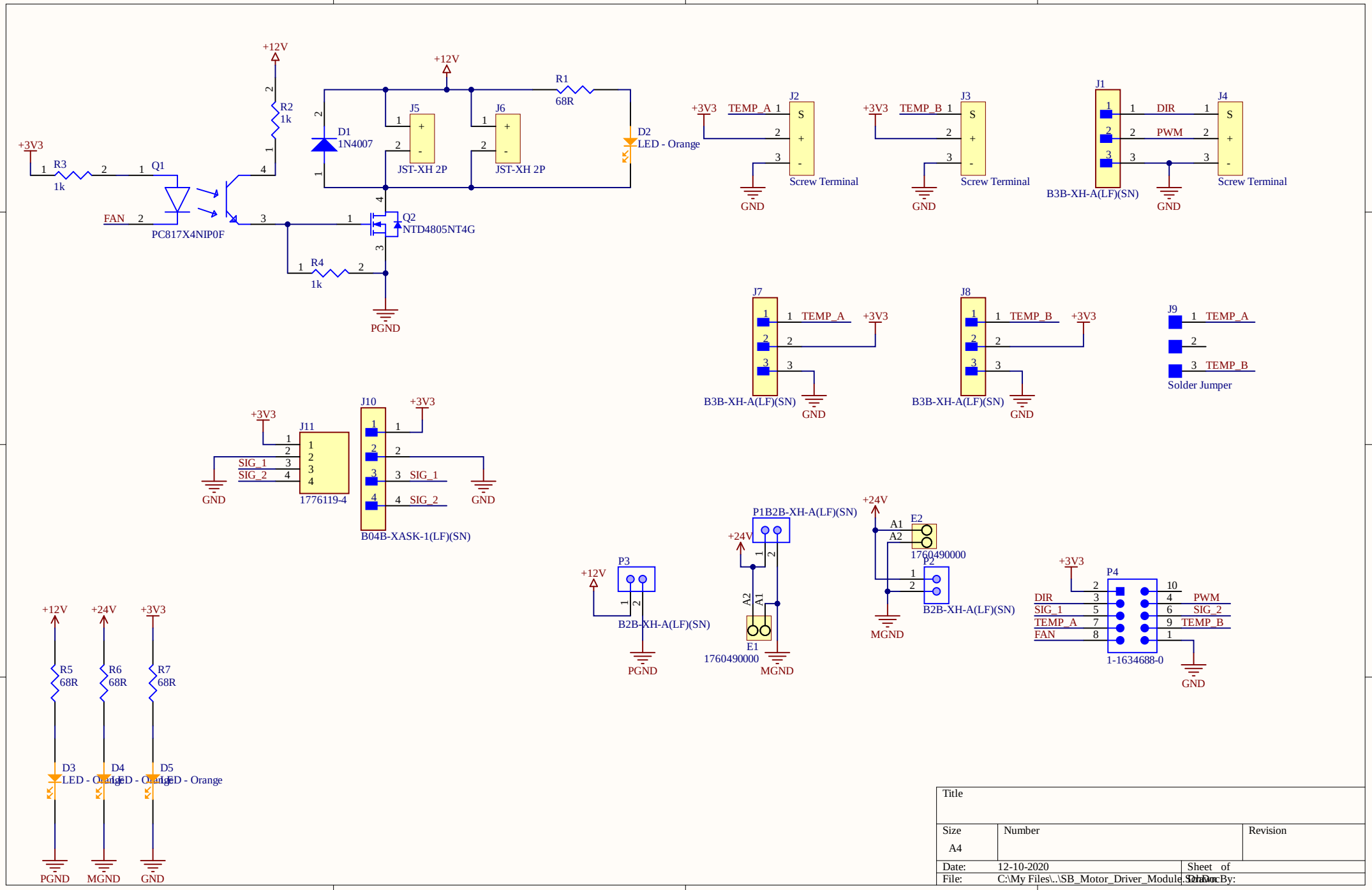

Title		
Size A4	Number	Revision
Date: 12-10-2020	Sheet of	
File: C:\My Files\..\SB_Motor_Driver_Module.SchDoc	Drawn By:	