Note: If you have not downloaded this document from our official website, please note that the information provided may not be the most current.
Please download the latest datasheet of MA40S4S from the official website of Murata Manufacturing

http://www.murata.com/en-us/products/productdetail?partno=MA40S4S

MA40S4S

NRND RoHS REACH

Appearance & Shape

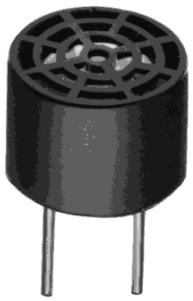

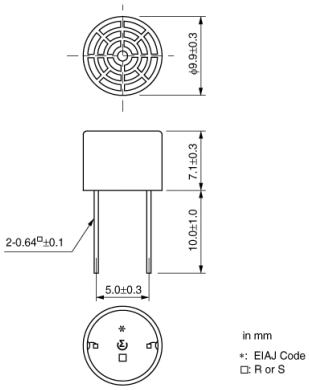

Packaging Information

Packaging	Specifications	Standard Packing Quantity
-	Box	540

Features

1. Compact and light weight.
2. High sensitivity and sound pressure.

Attention
1.This datasheet is downloaded from the website of Murata Manufacturing Co., Ltd. Therefore, it's specifications are subject to change or our products in it may be discontinued without advance notice. Please check with our sales representatives or product engineers before ordering.
2.This datasheet has only typical specifications because there is no space for detailed specifications.
Therefore, please review our product specifications or consult the approval sheet for product specifications before ordering.

Note: If you have not downloaded this document from our official website, please note that the information provided may not be the most current.
Please download the latest datasheet of MA40S4S from the official website of Murata Manufacturing

http://www.murata.com/en-us/products/productdetail?partno=MA40S4S

MA40S4S

Specifications

Operating Temperature Range	-40℃ to 85℃
Construction	Open type
Center Frequency	40kHz
S.P.L.	120dB typ. (0dB=0.02mPa)
Directivity	80deg. (typ.)
Capacitance	2550pF
Capacitance Tolerance	±20%
Max. Input Voltage	20Vp-p Continuous signal, Square wave

Attention
1.This datasheet is downloaded from the website of Murata Manufacturing Co., Ltd. Therefore, it's specifications are subject to change or our products in it may be discontinued without advance notice. Please check with our sales representatives or product engineers before ordering.
2.This datasheet has only typical specifications because there is no space for detailed specifications.
Therefore, please review our product specifications or consult the approval sheet for product specifications before ordering.

Note: If you have not downloaded this document from our official website, please note that the information provided may not be the most current.
Please download the latest datasheet of MA40S4S from the official website of Murata Manufacturing

http://www.murata.com/en-us/products/productdetail?partno=MA40S4S

MA40S4S

Product Data

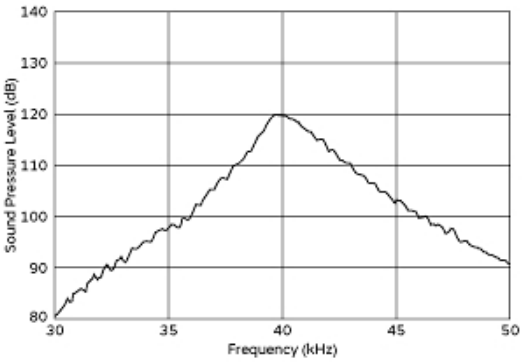

Freq. Characteristics

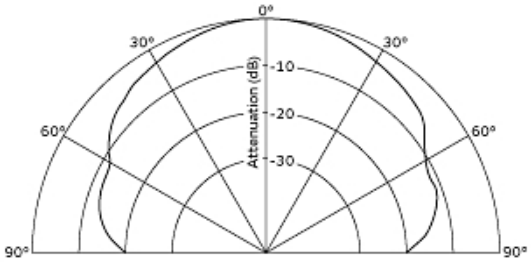

Directivity in S.P.L.

Attention
1.This datasheet is downloaded from the website of Murata Manufacturing Co., Ltd. Therefore, it's specifications are subject to change or our products in it may be discontinued without advance notice. Please check with our sales representatives or product engineers before ordering.
2.This datasheet has only typical specifications because there is no space for detailed specifications.
Therefore, please review our product specifications or consult the approval sheet for product specifications before ordering.