Mo-XL Hat v1.0

Raspberry Pi 5 I/O HAT for Autonomous Vehicle Control

Designed for the Mo-XL autonomous airstrip mower | 65 x 56.5 mm | 6-layer ENIG | JLCPCB assembly

Features

Power Hardened 12V input (TVS + EMI filter + polyfuse) powers Pi 5 and all HAT circuitry via 5.88V/3A buck + 5.05V/2A LDO. No external Pi power supply needed.

Motor Drive 2 opto-isolated BTS7960 channels (8 signals: RPWM, LPWM, R_EN, L_EN per channel). 20 kHz PWM capable. IDC ribbon cable to BTS7960 modules.

CAN / CAN-FD MCP251863T integrated controller + transceiver on SPI. ISO 11898 compliant, TVS protected, 4-pin JST-XH bus connector.

RS-232 MAX3221 level shifter on UART0. 3-pin JST-PH connector. TX always active. RX shared with SBUS via DNP resistor selection.

SBUS RC receiver input via 74HC14 inverter on UART0 RX. 3-pin JST-PH with 5V receiver power. Hardware selectable vs RS-232 RX (DNP 0R resistors). Dead-man switch for manual override.

Servo PWM PCA9685 16-channel 12-bit PWM driver (I2C). 4 channels broken out to 8-pin JST-XH with 5.88V servo power (2 power + 2 GND pins).

Analog ADS1115 16-bit 4-channel ADC (I2C). On-board resistor dividers sized for 12V and 24V battery monitoring. 2 channels for resistive/current sensors.

Thermocouple MAX31855 K-type thermocouple interface on SPI. Cold-junction compensated. 0-1024C range. 2-pin JST-XH connector.

Relay Drivers ULN2003A Darlington driver, 4 channels with flyback clamp to 12V. 500 mA per channel. 5-pin JST-XH connector.

Digital In 74HC14 hex Schmitt trigger with 4 conditioned inputs: 1 engine tach + 2 wheel encoder pulse counters + 1 SBUS. GPIO interrupt capable. 5-pin JST-PH connector.

EEPROM CAT24C256 HAT ID EEPROM on I2C0. Enables Pi auto-configuration per Raspberry Pi HAT specification. Write-protect via solder jumper JP1.

Power Architecture

```
12V (J1, battery center tap)
 |                                XL4015 Feedback: R1=10K, R2=2.7K
 F1 (3A polyfuse, 30V)            Output: 1.25 x (1 + 10K/2.7K) = 5.88V
 |
 +-- 5.88V / 3A Buck (XL4015, TO-263-5)
      |-- PCA9685 servo power (5.88V direct, 0.5A)
      |-- J6 servo connector power pins
      +-- 5.05V / 2A LDO (TPS7A7001DDA)
           |     Feedback: R27=274K, R26=30.1K
           |     Output: 0.5 x (1 + 274K/30.1K) = 5.05V
           |-- Pi 5V (GPIO header pins 2/4, 1.5A)
           |-- HAT logic ICs (3.3V from Pi regulator)
           +-- Field-side opto power (5V)
```

Bill of Materials - Key ICs

IC	Function	Bus	Package
MCP251863T	CAN FD controller + transceiver	SPI CS0	SSOP-28
MAX31855	K-type thermocouple ADC	SPI CS1	SOIC-8
PCA9685PW	16-ch 12-bit PWM driver	I2C 0x40	TSSOP-28
ADS1115	16-bit 4-ch ADC	I2C 0x48	TSSOP-10
TLP293-4 x2	Quad opto-isolators (motor PWM)	GPIO	SO-16
ULN2003A	Darlington relay driver (4 ch)	GPIO	SOP-16
XL4015	12V to 5.88V/3A buck converter		TO-263-5
TPS7A7001DDA	5.88V to 5.05V/2A LDO		SO-PowerPAD-8
MAX3221	RS-232 line driver/receiver	UART0	TSSOP-16
74HC14D	Hex Schmitt trigger inverter		SOIC-14
CAT24C256	HAT ID EEPROM	I2C0	TSSOP-8

Power Budget

Load	Rail	Current
Raspberry Pi 5	5V (LDO)	1.5A
PCA9685 + servo	6V (buck)	0.5A
HAT logic ICs	3.3V (Pi)	0.1A
Opto field side	5V (LDO)	0.1A
Relay coils (4x)	12V	0.8A
CAN transceiver	5V	0.07A
Total from 12V		~1.8A

GPIO Pin Map

GPIO	Function	Connector
2	SDA (I2C)	
3	SCL (I2C)	
4	RPM TACH	J8
5	RLY AUX	J5
6	ENC LEFT	J8
7	CS1 (TC)	J9
8	CS0 (CAN)	J2
9	MISO	
10	MOSI	
11	SCLK	
12	L_RPWM	J3
13	R_RPWM	J4
16	L_LPWM	J3
17	RLY RUN	J5
18	(SPARE)	
19	ENC RIGHT	J8
20	L_REN	J3
21	L_LEN	J3
22	CAN INT	
23	R_REN	J4
24	R_LEN	J4
25	RLY BLADE	J5
26	R_LPWM	J4
27	RLY START	J5

Connector Pinouts

Connector families: J1 JST-VH (power), J3/J4 shrouded IDC 2x4 2.54mm (ribbon cable to BTS7960), J7/J8/J11/J12 JST-PH, all others JST-XH. Unique pin counts per family prevent cross-plugging. UART0 TX always active on RS-232 (J11). RX hardware-selectable between RS-232 RX and SBUS (J12) via DNP 0R resistors.

Connector	Pin	Signal
J1 VH 2p	1	GND
	2	+12V_RAW
J2 XH 4p	1	CANH
	2	CANL
	3	CAN_12V
	4	GND
J3 IDC 2x4	1	L_RPWM
	2	L_LPWM
	3	L_REN
	4	L_LEN
	5	L_RIS
	6	L_LIS
	7	VCC
	8	GND
J4 IDC 2x4	1	R_RPWM
	2	R_LPWM
	3	R_REN
	4	R_LEN
	5	R_RIS
	6	R_LIS
	7	VCC
	8	GND
J5 XH 5p	1	RLY_RUN
	2	RLY_START
	3	RLY_BLADE
	4	RLY_AUX
	5	GND

Connector	Pin	Signal
J6 XH 8p	1	CHKTHRTL
	2	SERVO1
	3	SERVO2
	4	SERVO3
	5	6V
	6	6V
	7	GND
	8	GND
J7 PH 5p	1	BATT_V
	2	ALT_I
	3	FUEL
	4	PACK_V
	5	GND
J8 PH 5p	1	RPM_SIG
	2	ENC_L
	3	ENC_R
	4	5V
	5	GND
J9 XH 2p	1	TC+
	2	TC-
J11 PH 3p	1	RS232_TX
	2	RS232_RX
	3	GND
J12 PH 3p	1	SBUS_IN
	2	5V
	3	GND

Analog Inputs (ADS1115, I2C 0x48)

Channel	Signal	Interface	Scale Factor
A0	Bottom battery	100K/27K divider	V x 4.704
A1	Alternator I	ACS712 or shunt	
A2	Fuel level	Resistive sender	Calibrate in SW
A3	Full pack 24V	100K/10K divider	V x 11.0

Trace Width Table (1 oz Cu, 10C rise, outer layer)

Power supply rails (12V, 5.88V, 5V) use copper pours. Traces below are for output connector routing only.

Conn	Signals	I max	Width	Notes
J1	+12V_RAW, GND	3A	Pour	Copper flood
J2	CANH, CANL	70mA	0.2mm (8mil)	Diff pair
J2	CAN_12V	50mA	0.2mm (8mil)	
J3/4	Motor opto signals	20mA	0.2mm (8mil)	x8 signals
J3/4	VCC, GND	100mA	0.25mm (10mil)	Opto field pwr
J5	RELAY_RUN/START/BLADE	200mA	0.3mm (12mil)	ULN2003A out
J5	GND (4 relay return)	800mA	0.5mm (20mil)	
J6	Servo PWM signals	20mA	0.2mm (8mil)	x4 channels
J6	6V power (x2 pins)	500mA	0.5mm (20mil)	Servo stall
J6	GND (x2 pins)	500mA	0.5mm (20mil)	
J7	Analog sense lines	<1mA	0.2mm (8mil)	
J8	RPM, ENC_L, ENC_R	<5mA	0.2mm (8mil)	
J8	5V, GND	50mA	0.2mm (8mil)	Sensor excite
J9	TC+, TC-	<1mA	0.2mm (8mil)	Keep pair tight
J11	RS232_TX/RX, GND	10mA	0.2mm (8mil)	
J12	SBUS_IN, 5V, GND	50mA	0.2mm (8mil)	

Engine Control Sequence

Engine: Briggs & Stratton I/C 500cc, 14.5 HP, 3600 RPM no-load. Combined choke/throttle single lever controlled by PCA9685 CH0 servo.

Servo Positions (PCA9685 CH0)

Position	Description
CHOKE	Max position (past full throttle detent)
FULL	Mowing RPM ~3000
HALF	Starting RPM
IDLE	Min position

Cold Start (CHT < 30C)

1. Servo -> choke
2. Run relay -> close (magneto + fuel solenoid)
3. Start relay -> pulse 2-3s
4. Monitor RPM - if no catch after 3s, wait 5s, retry (max 3)
5. RPM confirmed -> choke to full over 10-20s as CHT rises
6. CHT > 60C -> full throttle (mowing RPM)

Warm Start (CHT > 40C)

1. Servo -> half throttle
2. Run relay -> close
3. Start relay -> pulse 2-3s
4. RPM confirmed -> full throttle

Shutdown

1. Servo -> idle
2. Wait 10s (cool-down)
3. Run relay -> open (kill spark + fuel cutoff)
4. Servo -> half (reset for next start)
5. Set RTC wake alarm -> shutdown Pi

CHT Safety Limits

CHT	Action
< 30C	Cold start with choke
30-60C	Choke blending (proportional)
> 60C	Normal operating temperature
> 200C	Warning: reduce to idle
> 250C	Emergency shutdown

Power

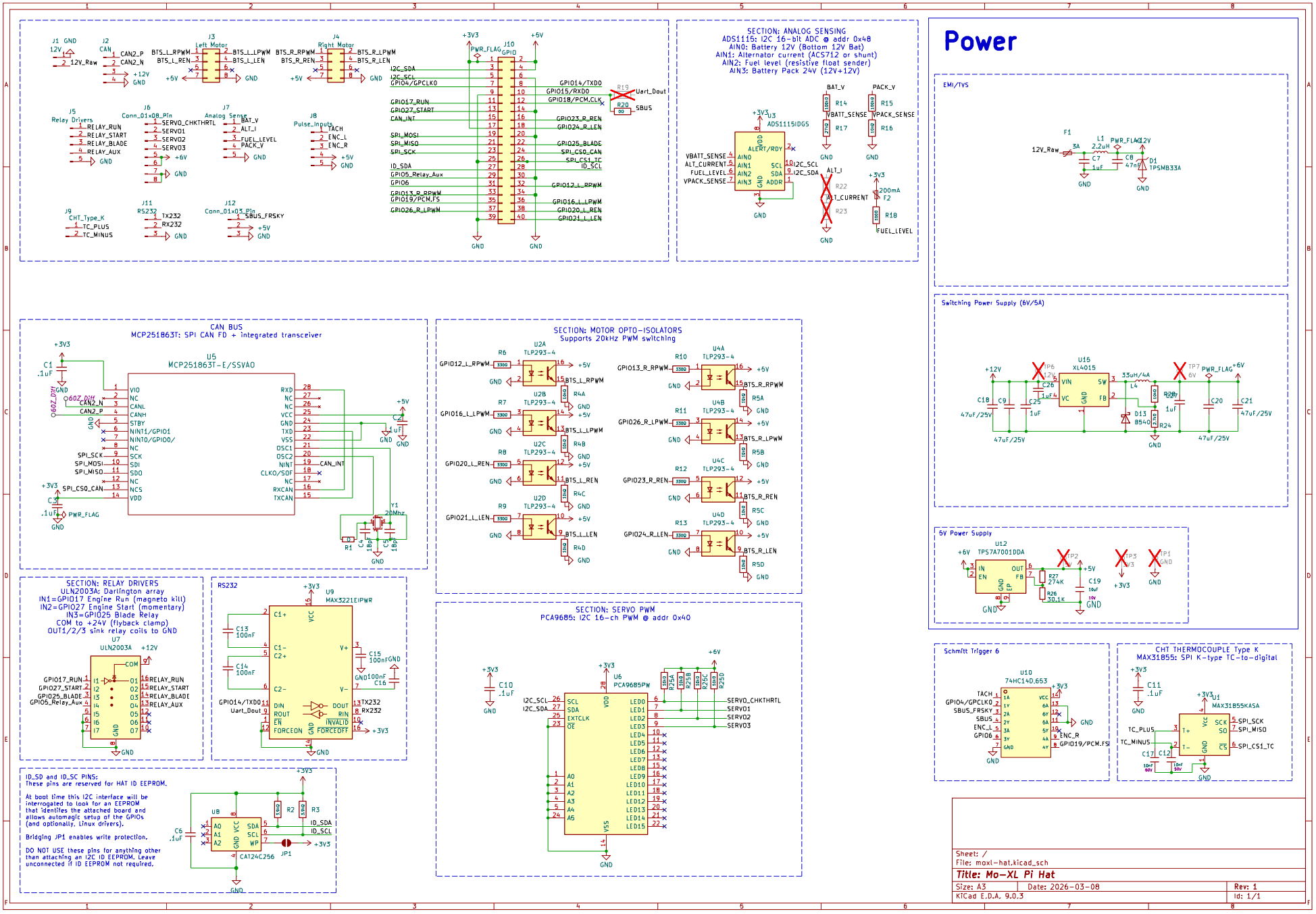

Sheet: /
File: moxl-hat.kicad_sch

Title: Mo-XL Pi Hat

Size: A3	Date: 2026-03-08	Rev: 1
KiCad E.D.A. 9.0.3		Id: 1/1