Power

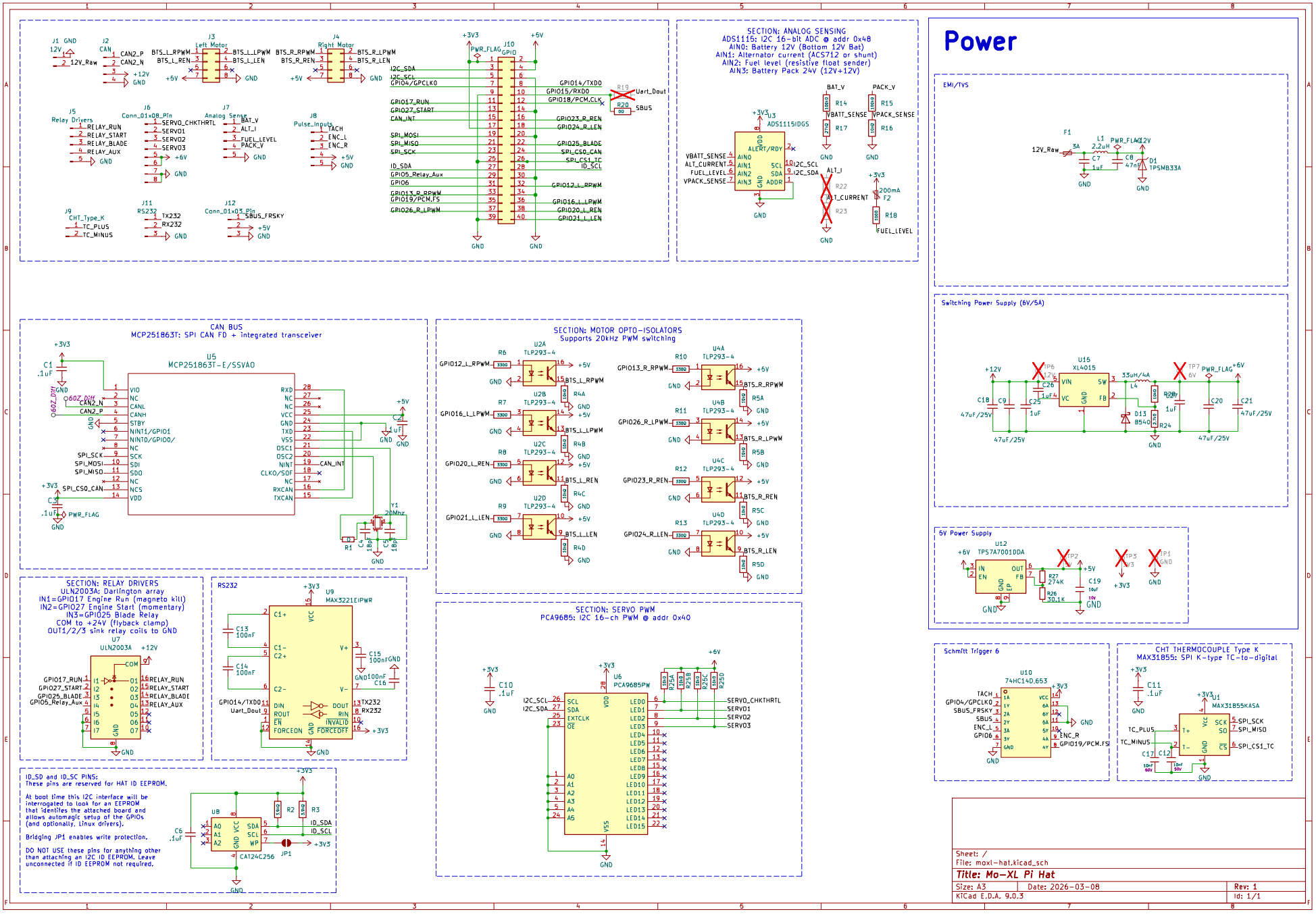

Sheet: /
File: moxl-hat.kicad_sch

Title: Mo-XL Pi Hat

Size: A3	Date: 2026-03-08	Rev: 1
KiCad E.D.A. 9.0.3		Id: 1/1