power_io

File: power_io.kicad_sch

mcu

File: mcu.kicad_sch

motor

File: motor.kicad_sch

NEMA 17 Hole Pattern

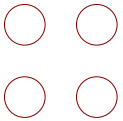

Original design by Joe Church/Tropical Labs
https://github.com/jcchurch13/Mechaduino-Hardware
KiCad Port done by Danilo Pesevic for IDMIL
Released under the Creative Commons
Attribution Share-Alike 4.0 License
https://creativecommons.org/licenses/by-sa/4.0/

Sheet: /
File: Mechaduino-Hardware-KiCad.kicad_sch

Title: Mechaduino KiCad Root Schematic

Size: A4	Date: 3/13/2026	**Rev:** 1.2
KiCad E.D.A. 9.0.7		Id: 1/4

USB and Motor Power

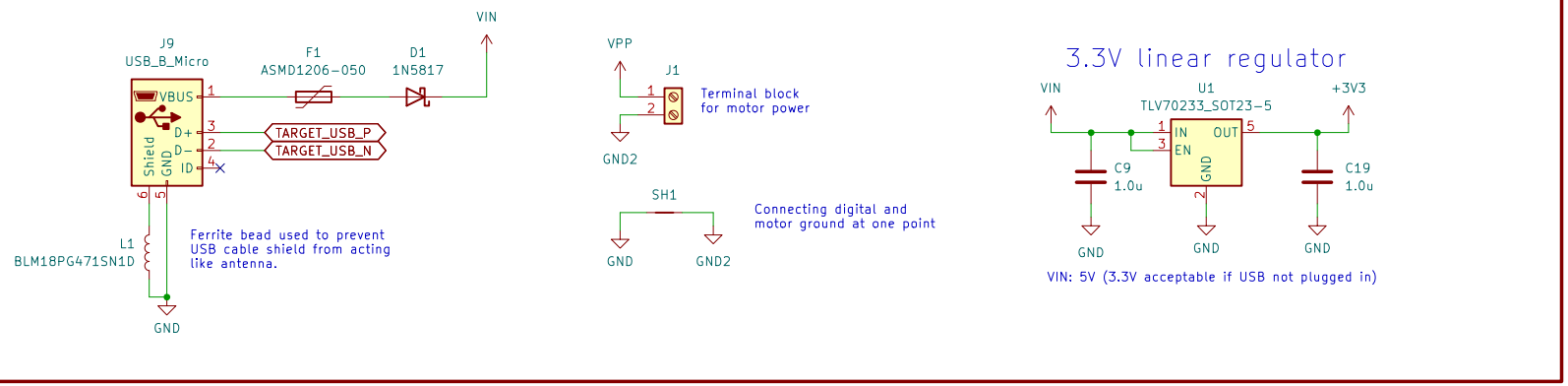

I/O Headers

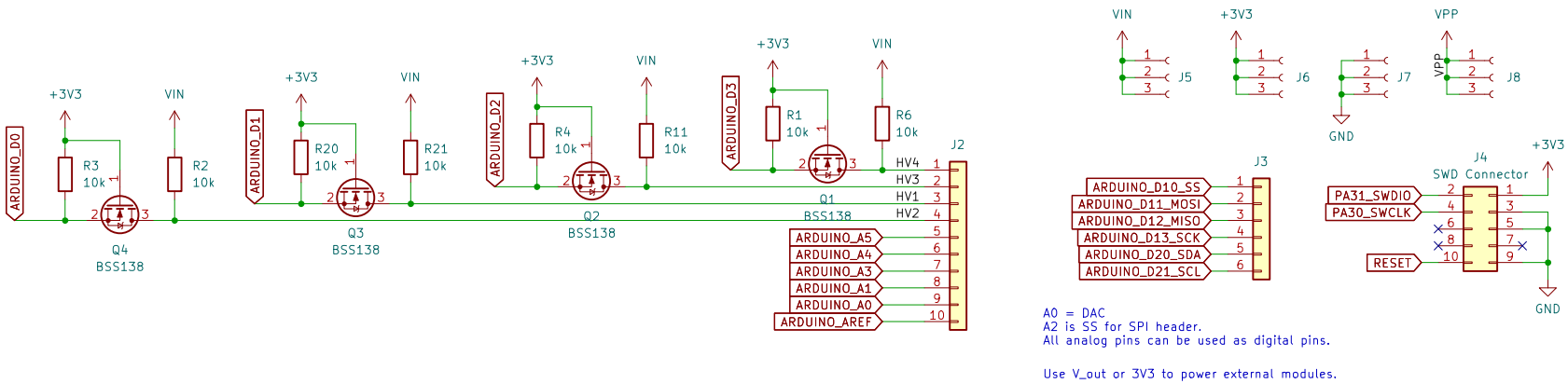

Capacitors are +/− 10% unless otherwise noted.

Original design by Joe Church/Tropical Labs
https://github.com/jcchurch13/Mechaduino-Hardware
KiCad Port done by Danilo Pesevic for IDMIL
Released under the Creative Commons
Attribution Share-Alike 4.0 License
https://creativecommons.org/licenses/by-sa/4.0/

Sheet: /power_io/
File: power_io.kicad_sch

Title: Mechaduino KiCad Power

Size: A4	Date: 3/13/2026	**Rev:** 1.2
KiCad E.D.A. 9.0.7		Id: 2/4

ATSAMD21G1BA

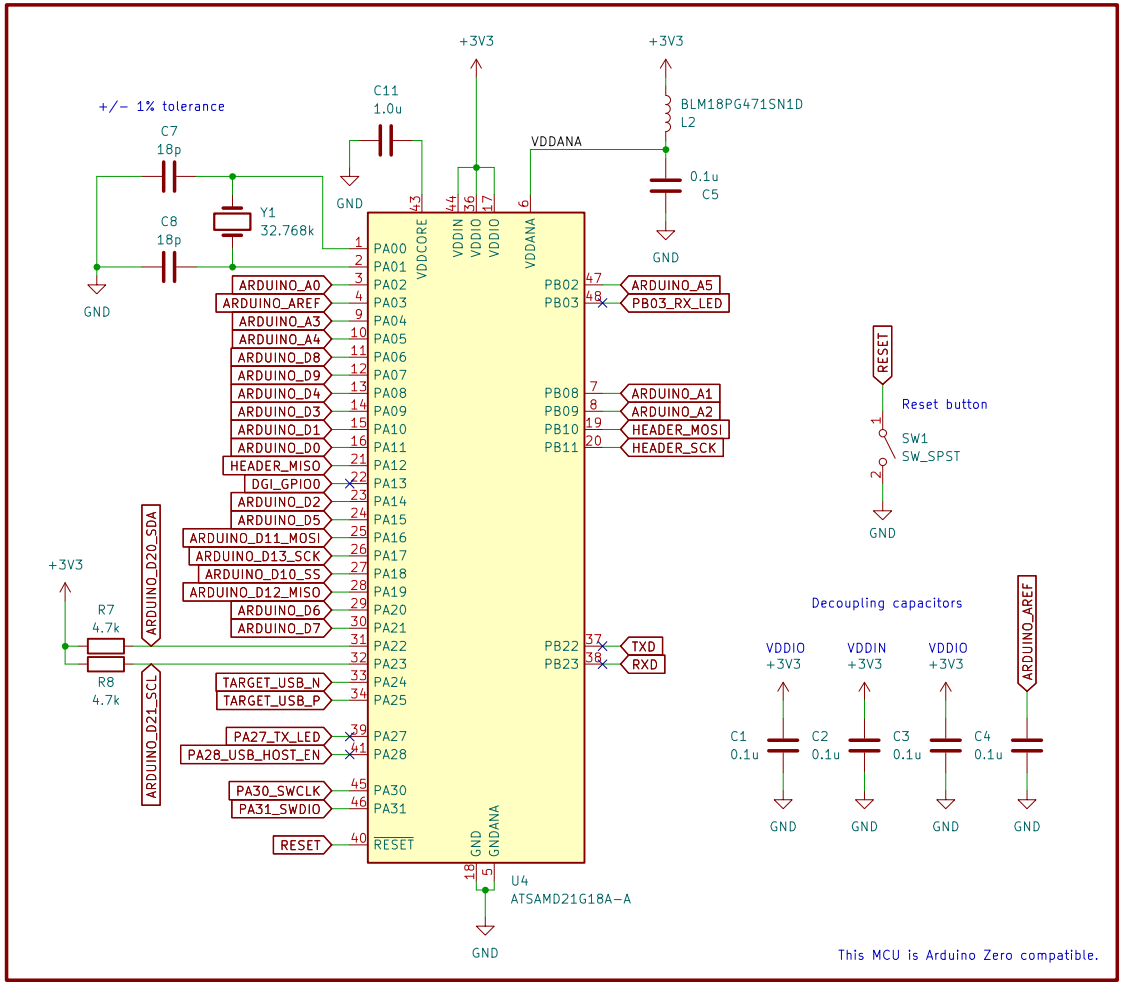

LED

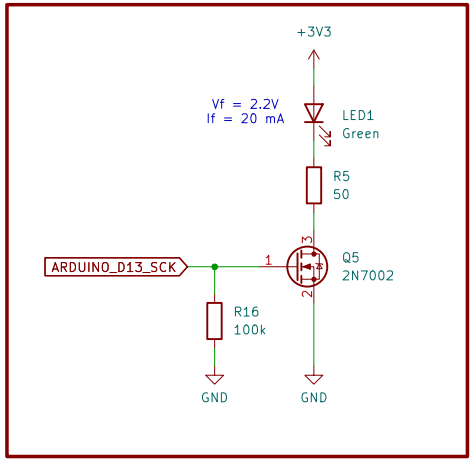

Capacitors are +/− 10% unless otherwise noted.

Original design by Joe Church/Tropical Labs
https://github.com/jcchurch13/Mechaduino-Hardware
KiCad Port done by Danilo Pesevic for IDMIL
Released under the Creative Commons
Attribution Share-Alike 4.0 License
https://creativecommons.org/licenses/by-sa/4.0/

Sheet: /mcu/
File: mcu.kicad_sch

Title: Mechaduino KiCad MCU

Size: A4	Date: 3/13/2026	**Rev:** 1.2
KiCad E.D.A. 9.0.7		Id: 3/4

Magnetic Encoder

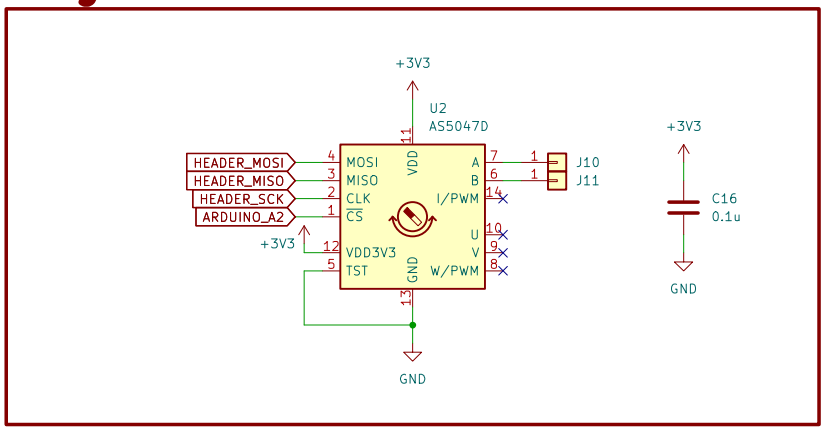

Note that AS5047 must be placed directly in the middle of the backside of the board for the sensor to work.

PWM Motor Driver

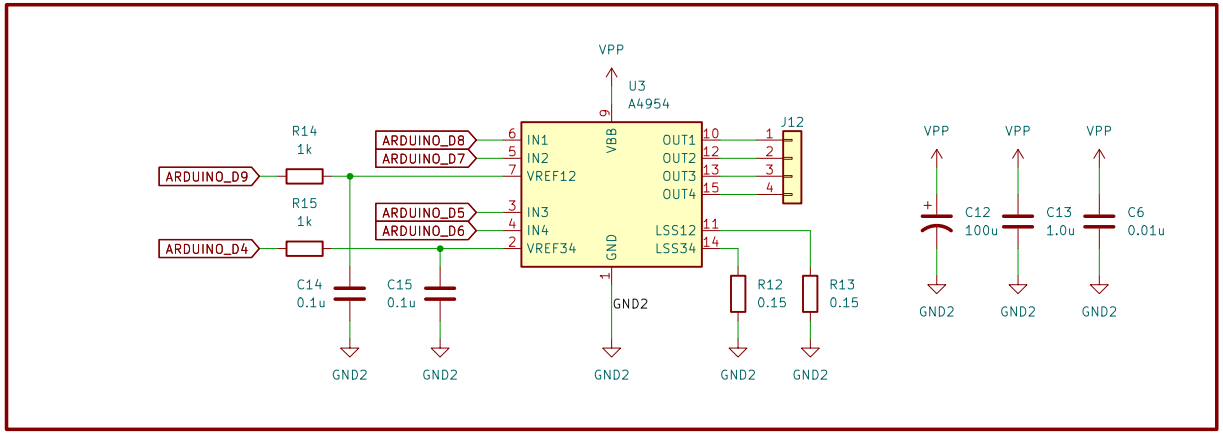

Capacitors are +/- 10% unless otherwise noted.

Original design by Joe Church/Tropical Labs
https://github.com/jcchurch13/Mechaduino-Hardware
KiCad Port done by Danilo Pesevic for IDMIL
Released under the Creative Commons
Attribution Share-Alike 4.0 License
https://creativecommons.org/licenses/by-sa/4.0/

Sheet: /motor/
File: motor.kicad_sch

Title: Mechaduino KiCad Motor ICs

Size: A4	Date: 3/13/2026	**Rev:** 1.2
KiCad E.D.A. 9.0.7		Id: 4/4