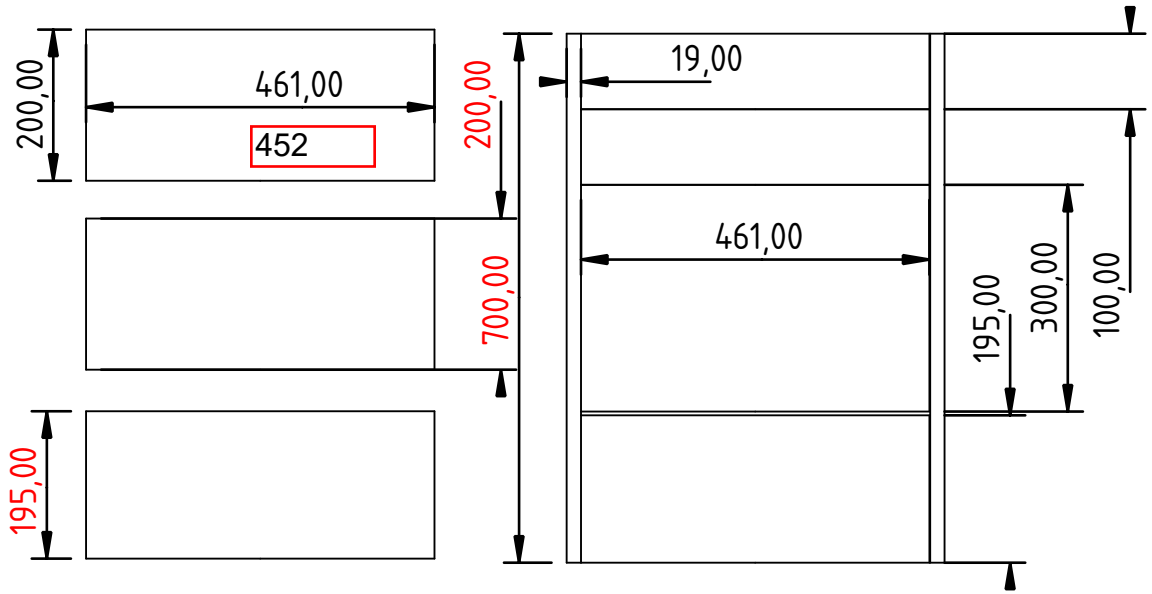

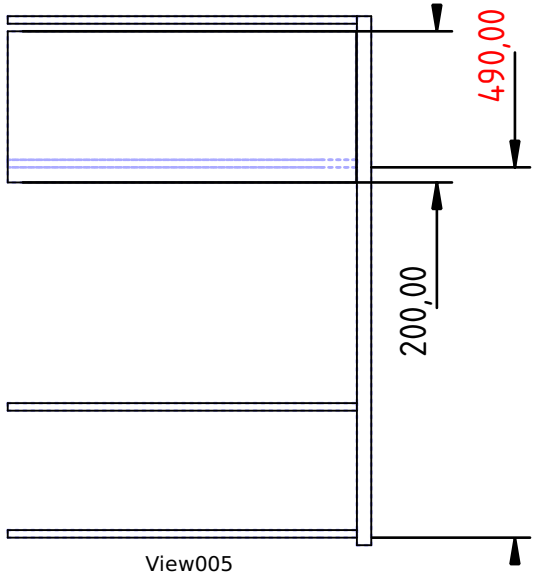

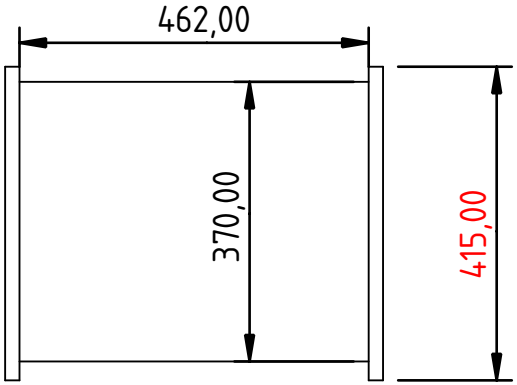

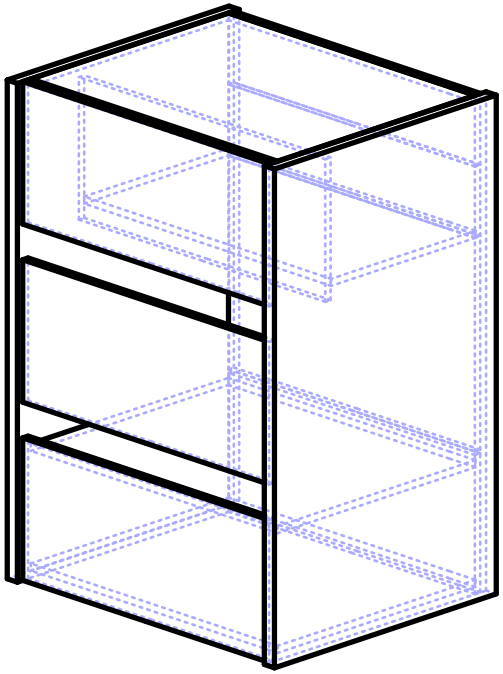

DESIGNED BY: RIP DATE: 2019 October		Pesdastil ASM	
SIZE A4			
SCALE Scale	WEIGHT (kg) Weight	DRAWING NUMBER 500_ASM_Pedastil	SHEET 1/1

This drawing is our property; it can't be reproduced or communicated without our written consent.