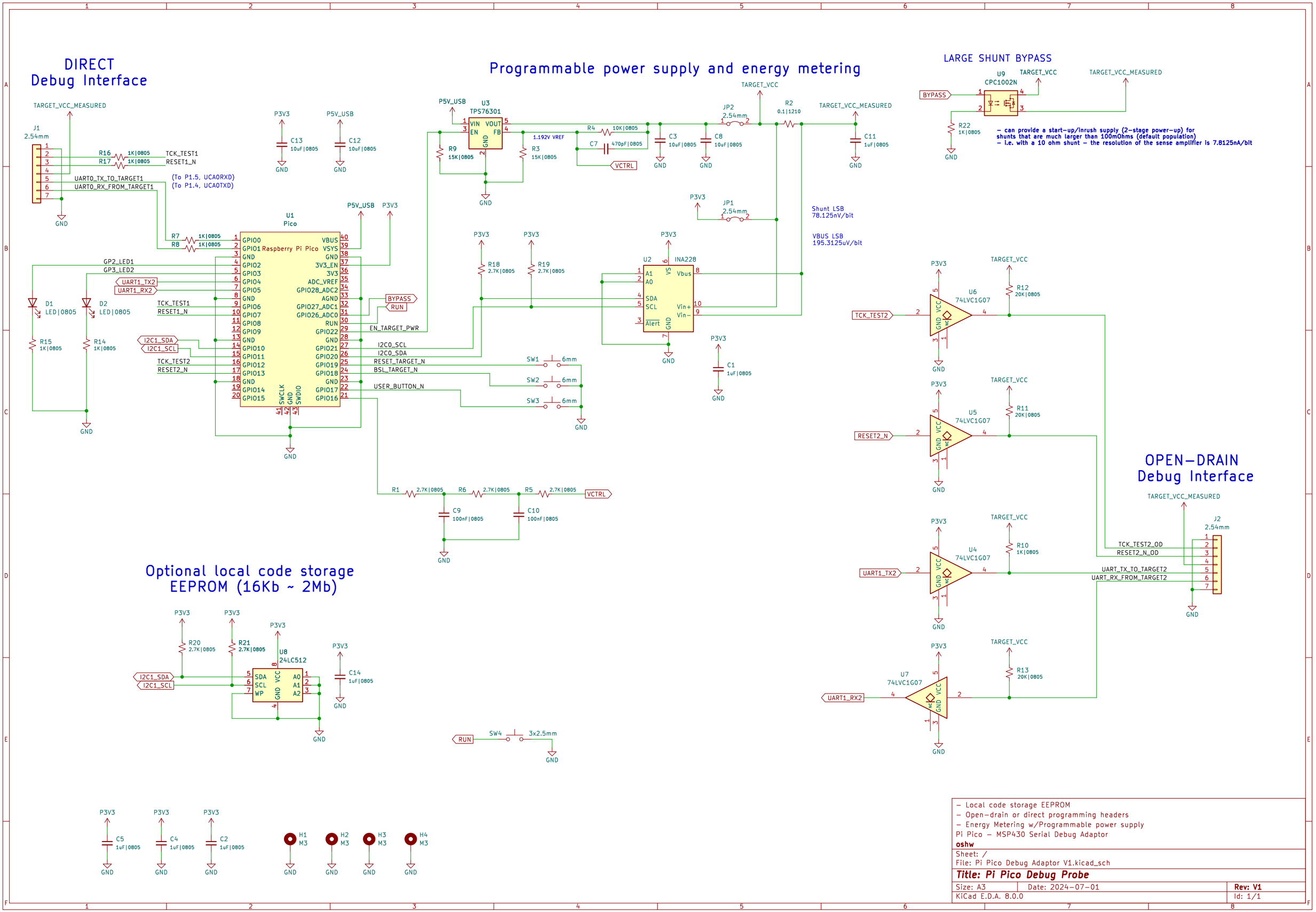

– Local code storage EEPROM
– Open–drain or direct programming headers
– Energy Metering w/Programmable power supply
Pi Pico – MSP430 Serial Debug Adaptor
oshw

Sheet: /
File: Pi Pico Debug Adaptor V1.kicad_sch

Title: Pi Pico Debug Probe

Size: A3	Date: 2024–07–01	**Rev: V1**
KiCad E.D.A. 8.0.0		Id: 1/1