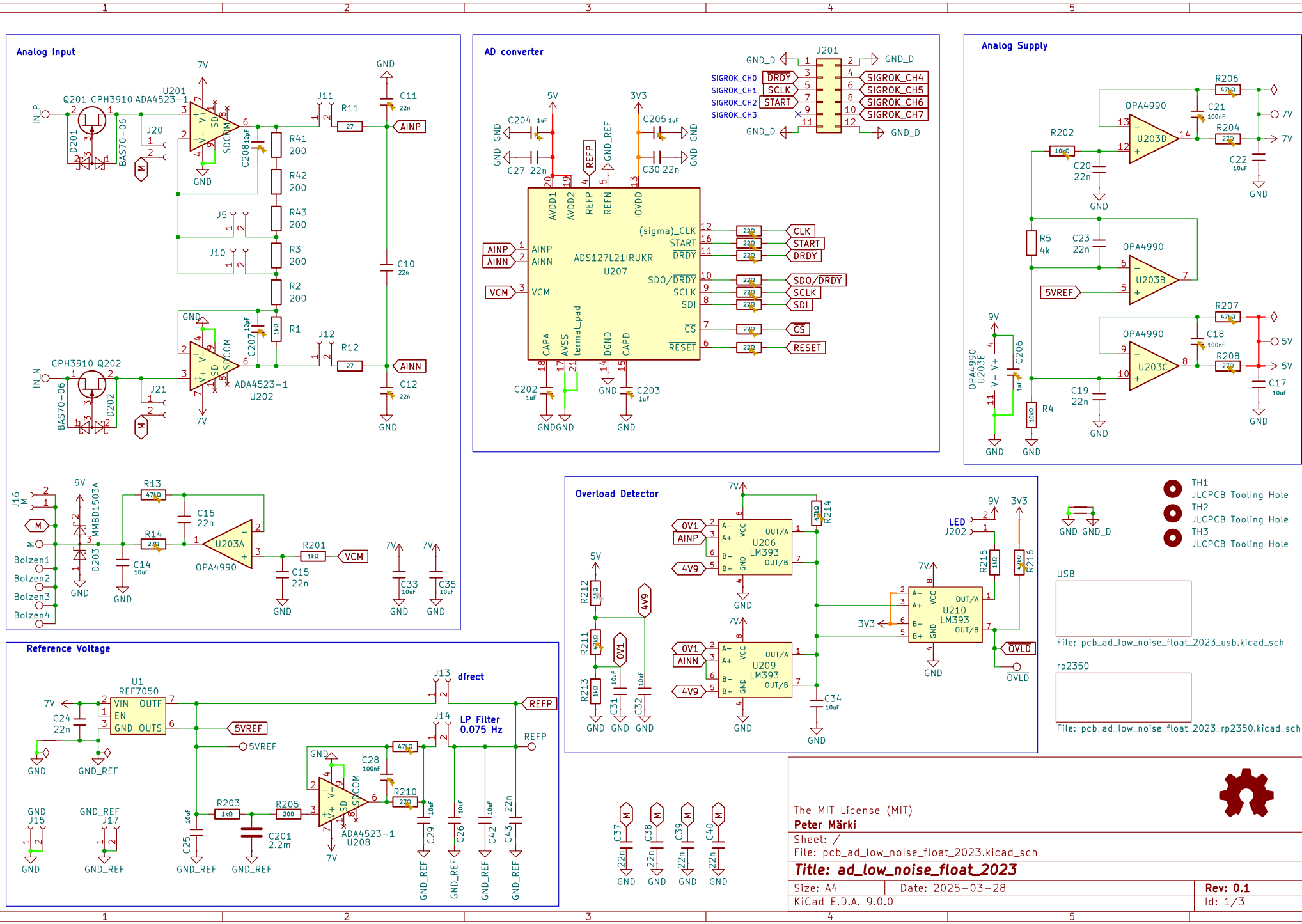
Analog Input
AD converter
Analog Supply
Overload Detector
Reference Voltage
ADS127L21IRUKR
U207
U201
ADA4523-1
U202
U203A
OPA4990
U203B
U203C
U203D
U206
LM393
U209
LM393
U210
LM393
U208
REF7050
U1
Q201 CPH3910
Q202
CPH3910
D201
D202
D203
MMBD1503A
BAS70-06
J201
J202
J13
direct
J14
LP Filter
0.075 Hz
LED
J16
Bolzen1
Bolzen2
Bolzen3
Bolzen4
TH1
JLCPCB Tooling Hole
TH2
JLCPCB Tooling Hole
TH3
JLCPCB Tooling Hole
USB
File: pcb_ad_low_noise_float_2023_usb.kicad_sch
rp2350
File: pcb_ad_low_noise_float_2023_rp2350.kicad_sch
The MIT License (MIT)
Peter Märki
Sheet: /
File: pcb_ad_low_noise_float_2023.kicad_sch
Title: ad_low_noise_float_2023
Size: A4
Date: 2025-03-28
Rev: 0.1
KiCad E.D.A. 9.0.0
Id: 1/3

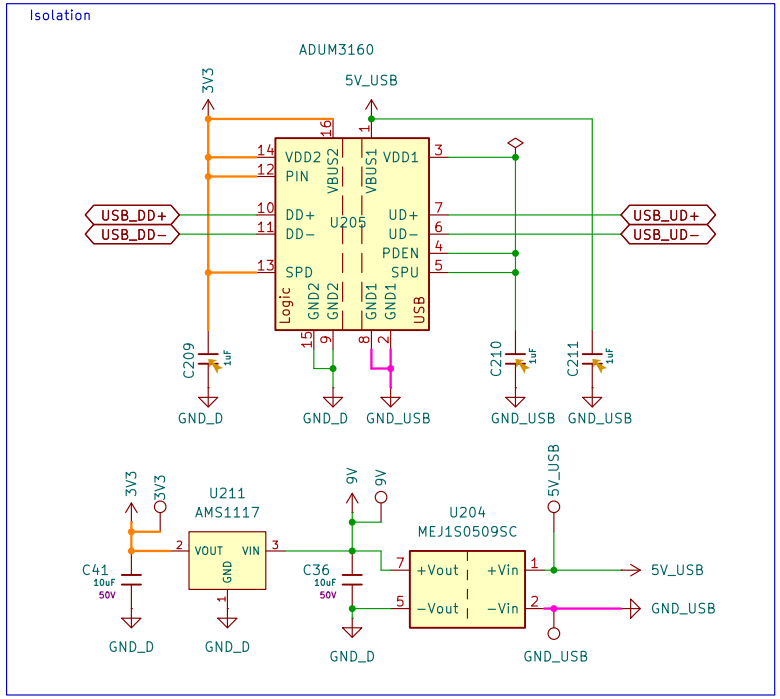

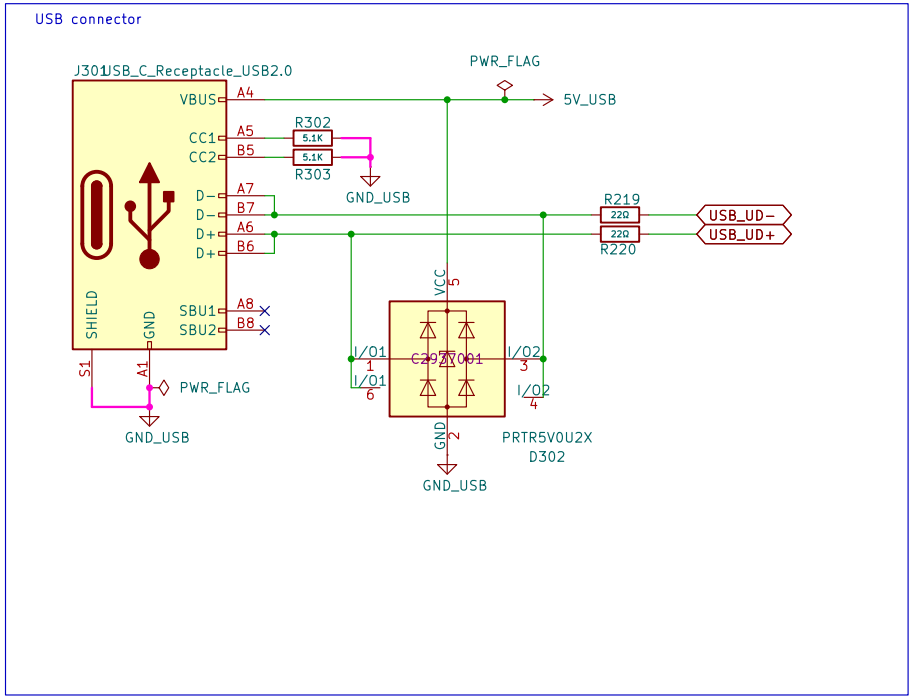

Sheet: /USB/		
File: pcb_ad_low_noise_float_2023_usb.kicad_sch		
Title:		
Size: A4	Date:	**Rev:**
KiCad E.D.A. 9.0.0		Id: 2/3

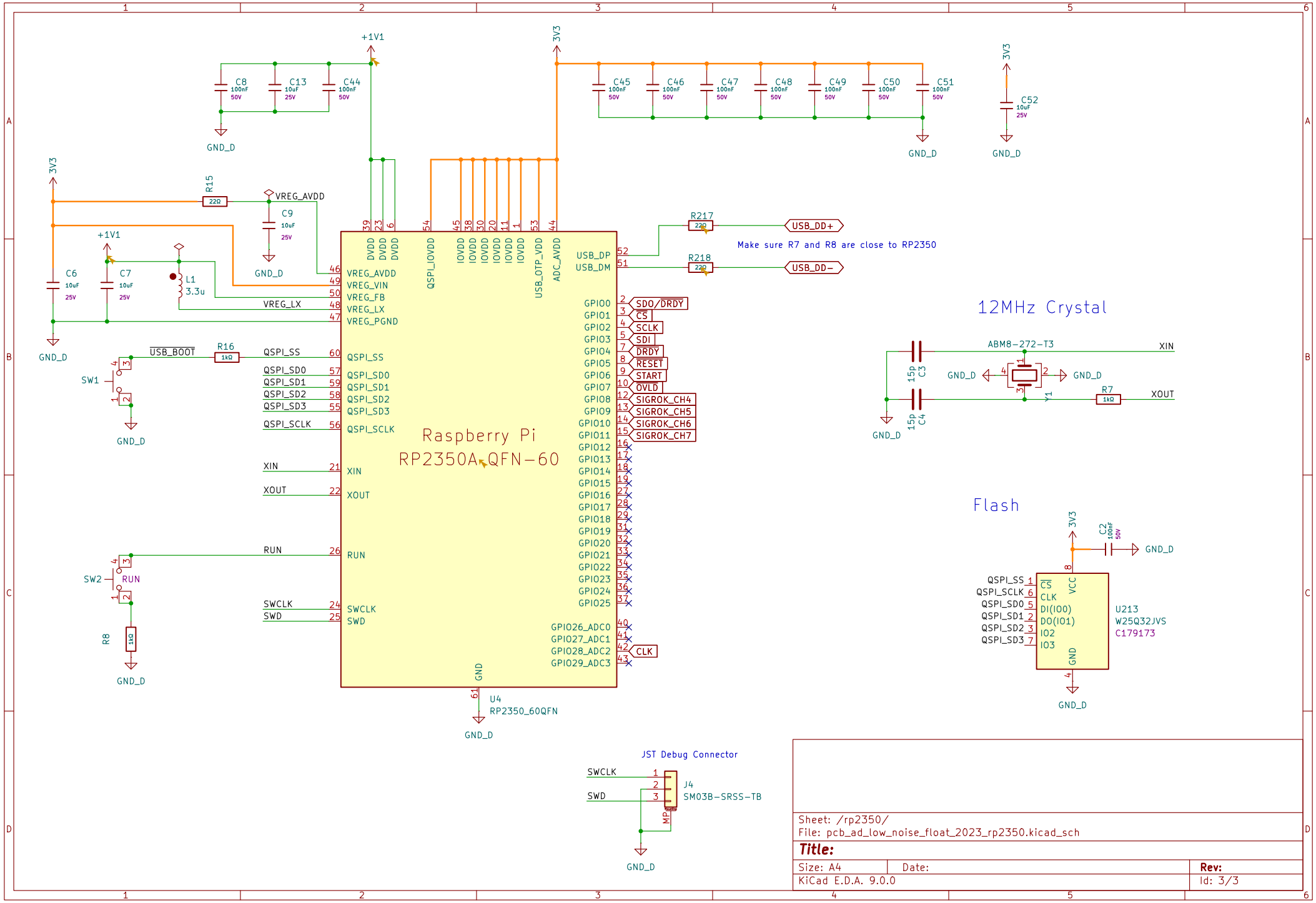
+1V1
3V3
C8 100nF 50V
C13 10uF 25V
C44 100nF 50V
C45 100nF 50V
C46 100nF 50V
C47 100nF 50V
C48 100nF 50V
C49 100nF 50V
C50 100nF 50V
C51 100nF 50V
C52 10uF 25V
GND_D
R15 22Ω
VREG_AVDD
C9 10uF 25V
C6 10uF 25V
C7 10uF 25V
L1 3.3u
VREG_LX
R217 22Ω
R218 22Ω
USB_DD+
USB_DD-
Make sure R7 and R8 are close to RP2350
DVDD
QSPI_IOVDD
IOVDD
USB_OTP_VDD
ADC_AVDD
USB_DP
USB_DM
VREG_AVDD
VREG_VIN
VREG_FB
VREG_LX
VREG_PGND
QSPI_SS
QSPI_SD0
QSPI_SD1
QSPI_SD2
QSPI_SD3
QSPI_SCLK
XIN
XOUT
RUN
SWCLK
SWD
GPIO0
GPIO1
GPIO2
GPIO3
GPIO4
GPIO5
GPIO6
GPIO7
GPIO8
GPIO9
GPIO10
GPIO11
GPIO12
GPIO13
GPIO14
GPIO15
GPIO16
GPIO17
GPIO18
GPIO19
GPIO20
GPIO21
GPIO22
GPIO23
GPIO24
GPIO25
GPIO26_ADC0
GPIO27_ADC1
GPIO28_ADC2
GPIO29_ADC3
SDO/DRDY
CS
SCLK
SDI
DRDY
RESET
START
OVLD
SIGROK_CH4
SIGROK_CH5
SIGROK_CH6
SIGROK_CH7
CLK
Raspberry Pi
RP2350A-QFN-60
U4
RP2350_60QFN
USB_BOOT
R16 1kΩ
SW1
SW2
R8 1kΩ
12MHz Crystal
ABM8-272-T3
C3 15p
C4 15p
R7 1kΩ
Y1
XIN
XOUT
Flash
C2 100nF 50V
U213
W25Q32JVS
C179173
CS
CLK
DI(IO0)
DO(IO1)
IO2
IO3
VCC
GND
JST Debug Connector
J4
SM03B-SRSS-TB
Sheet: /rp2350/
File: pcb_ad_low_noise_float_2023_rp2350.kicad_sch
Title:
Size: A4
Date:
Rev:
KiCad E.D.A. 9.0.0
Id: 3/3