Arduino → INPUTS

CCLab 2016 _ Week 5

Midterm

- Start thinking about your midterm project!
- You can combine!
- First Project Workshop Coming soon!

Github?!

- Where is your github link?

What is a submodule?!

- A submodule allows you to keep another Git repository in a subdirectory of your repository. The other repository has its own history, which does not interfere with the history of the current repository. This can be used to have external dependencies such as third party libraries for example.
- Basically it is a snapshot of a repo.

https://git-scm.com/docs/git-submodule

What does it look like?

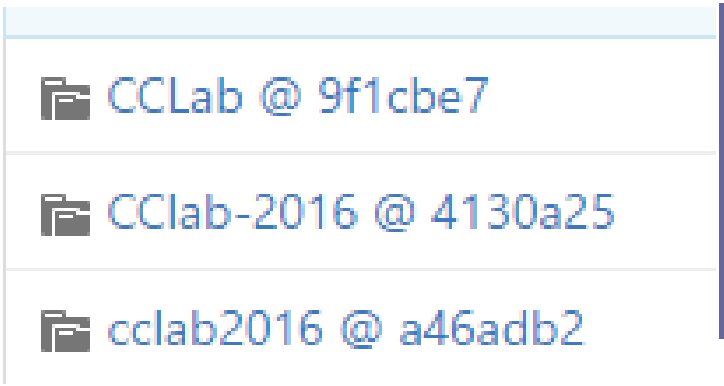

- Name @ commit hash

Adding a submodule

- git submodule add <repo link>

How do I remove it?

- git rm the_submodule
- rm -rf .git/modules/the_submodule

http://stackoverflow.com/questions/1260748/how-do-i-remove-a-submodule

Naming is important

- Try a better naming method
- Change your homework repo name
- Try “<YourName>_CClab_2016”

Arduino

What is an INPUT?

- An input device is a peripheral, component, or hardware equipment used to provide data and control signals to an information processing system such as a computer or information appliance.

Examples

Button

Big Button

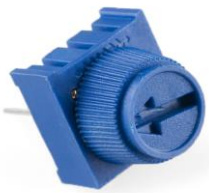

Potentiometer

Knob

Keypad

Switch

Switch

Arcade Button

5 way switch

Knob

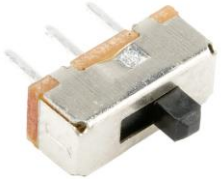

Switch

Potentiometer

Pulse

Gas

Motion

Pressure

pH

Photocell

Range Finder

Barometric Pressure

Temperature

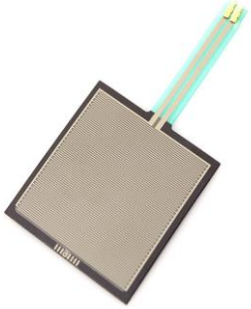

Force

Flex

Color

Humidity

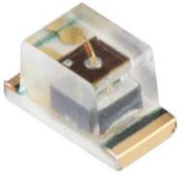

Light

Force

Single Axis Accelerometer

INPUTS

GAME CONTROLLERS

SOIL TEMP / MOISTURE

TOUCHSCREEN

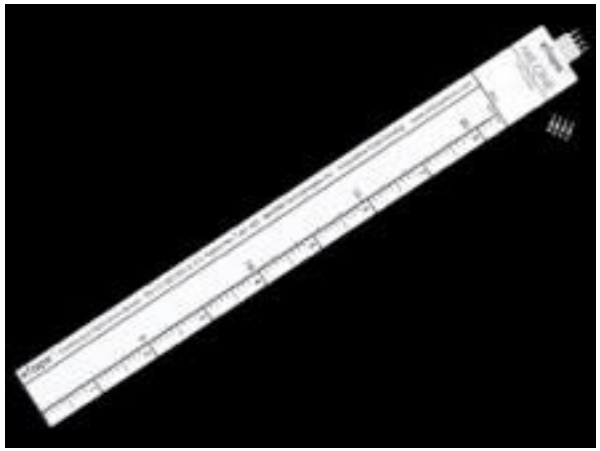

LIQUID LEVELS

LIQUID FLOW METERS

FINGERPRINT

Digital _ Switch

State: 0 or 1

Analog-LDR

Range: 0 or 1023

Analog vs. Digital Input

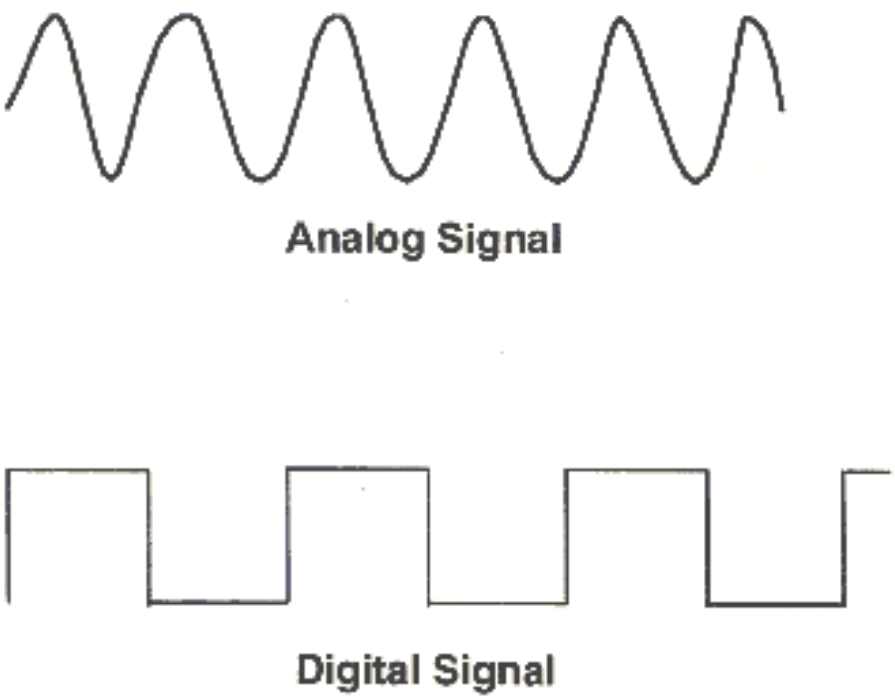

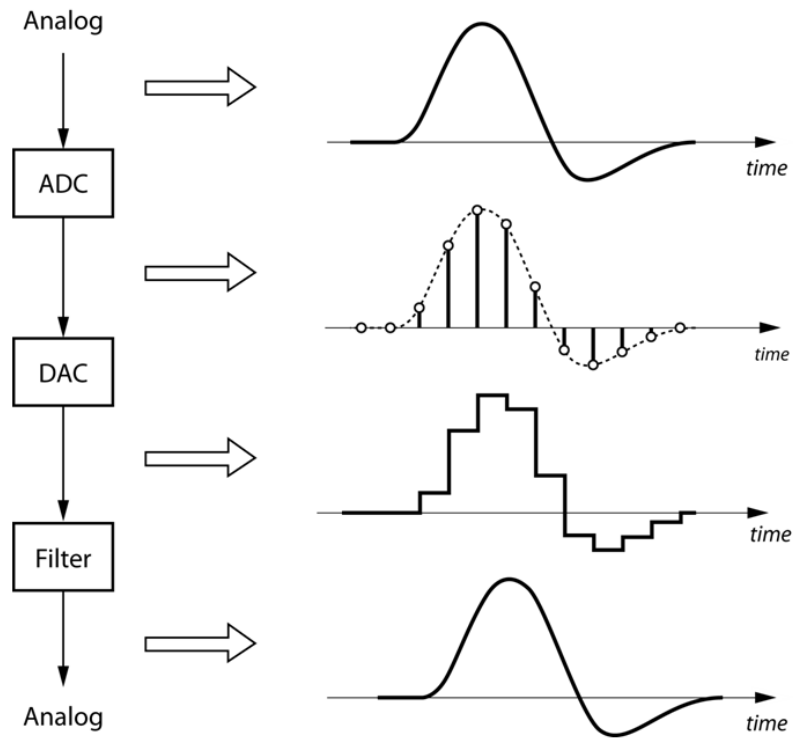

Digital Pins

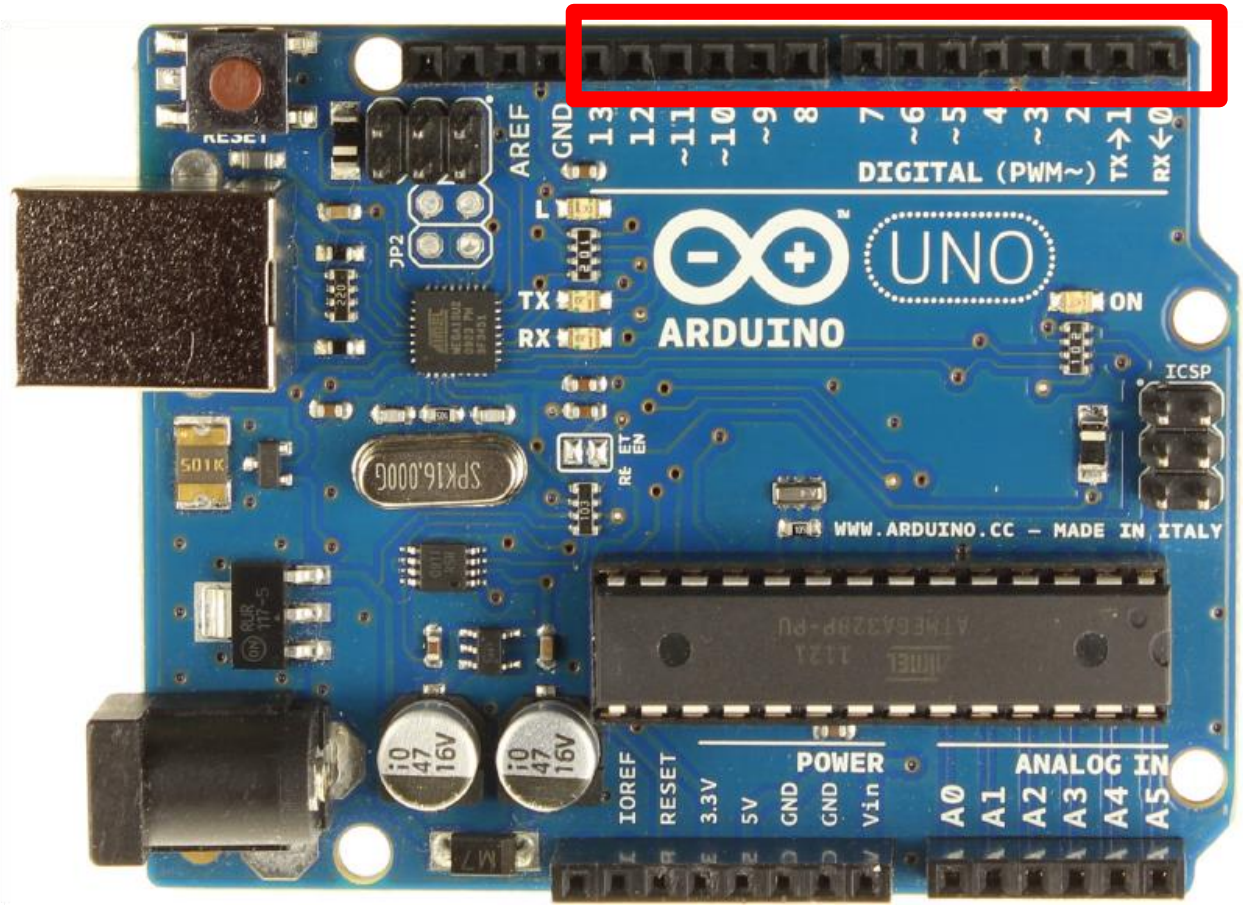

Analog Pins


RESET
AREF
GND
13
12
~11
~10
~9
8
7
~6
~5
4
~3
2
TX→1
RX←0
DIGITAL (PWM~)
L
JP2
TX
RX
UNO
ARDUINO
ON
ICSP
WWW.ARDUINO.CC – MADE IN ITALY
POWER
ANALOG IN
IOREF
RESET
3.3V
5V
GND
GND
Vin
A0
A1
A2
A3
A4
A5

Digital Input - Hookup

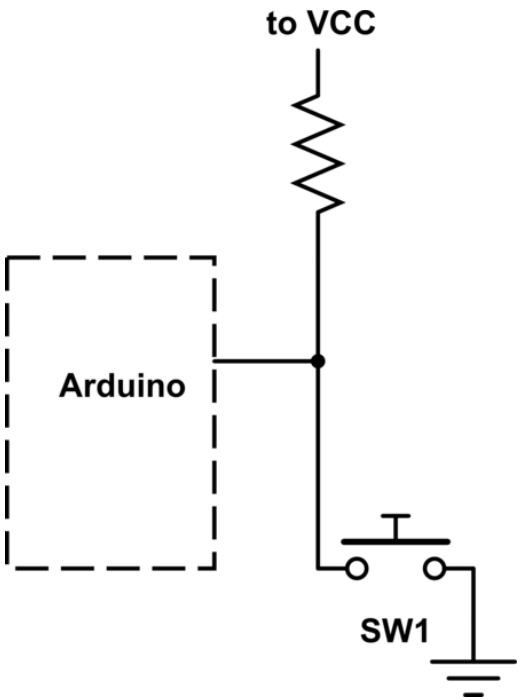

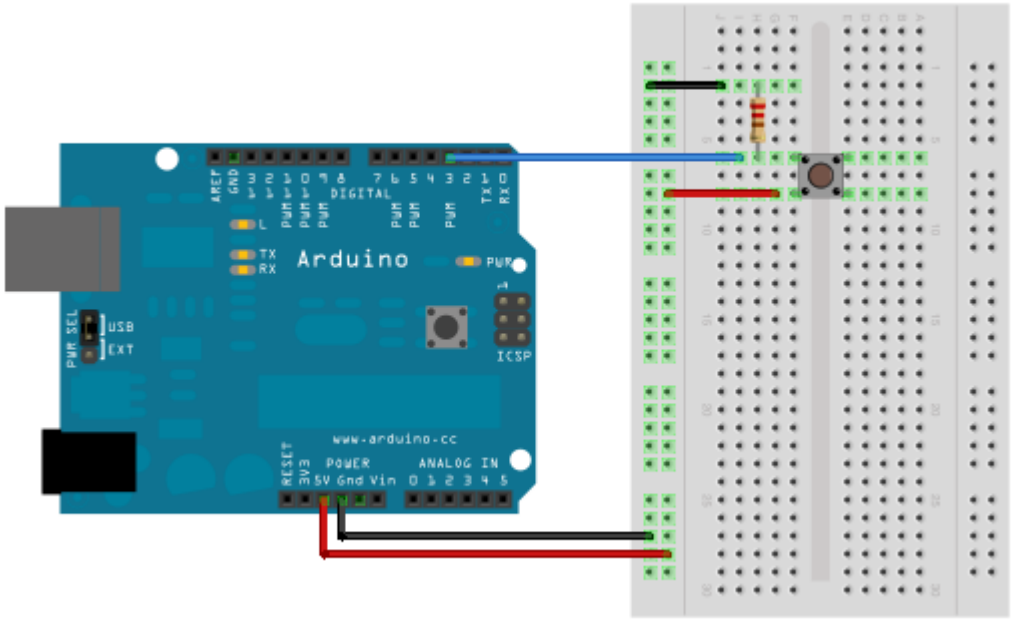

Analog Input - Hookup

Potentiometer connected to the analog input of the arduino

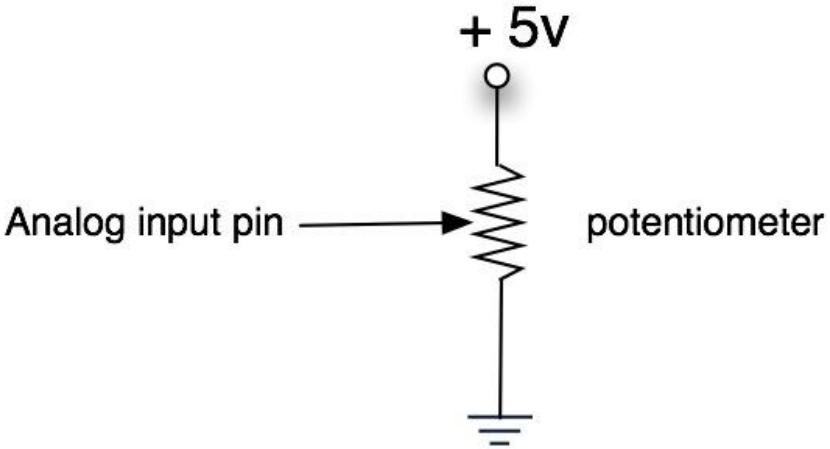

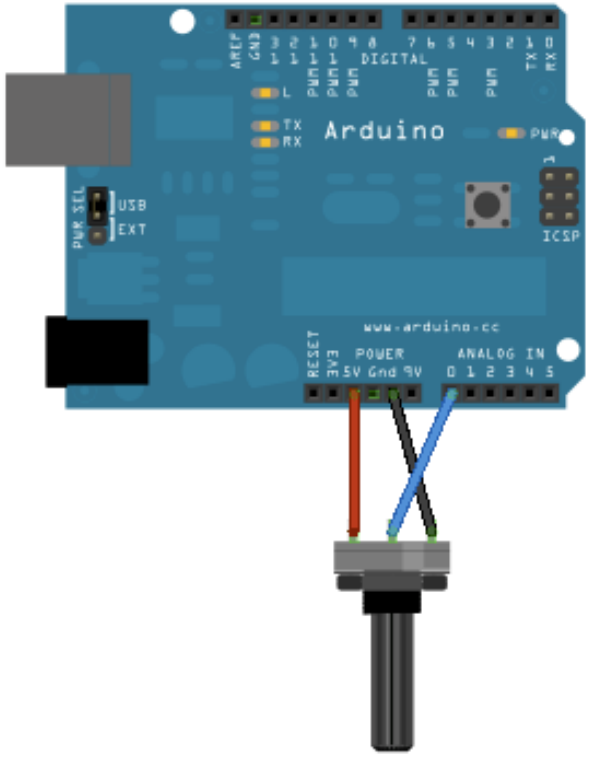

Control an LED with a Sensor

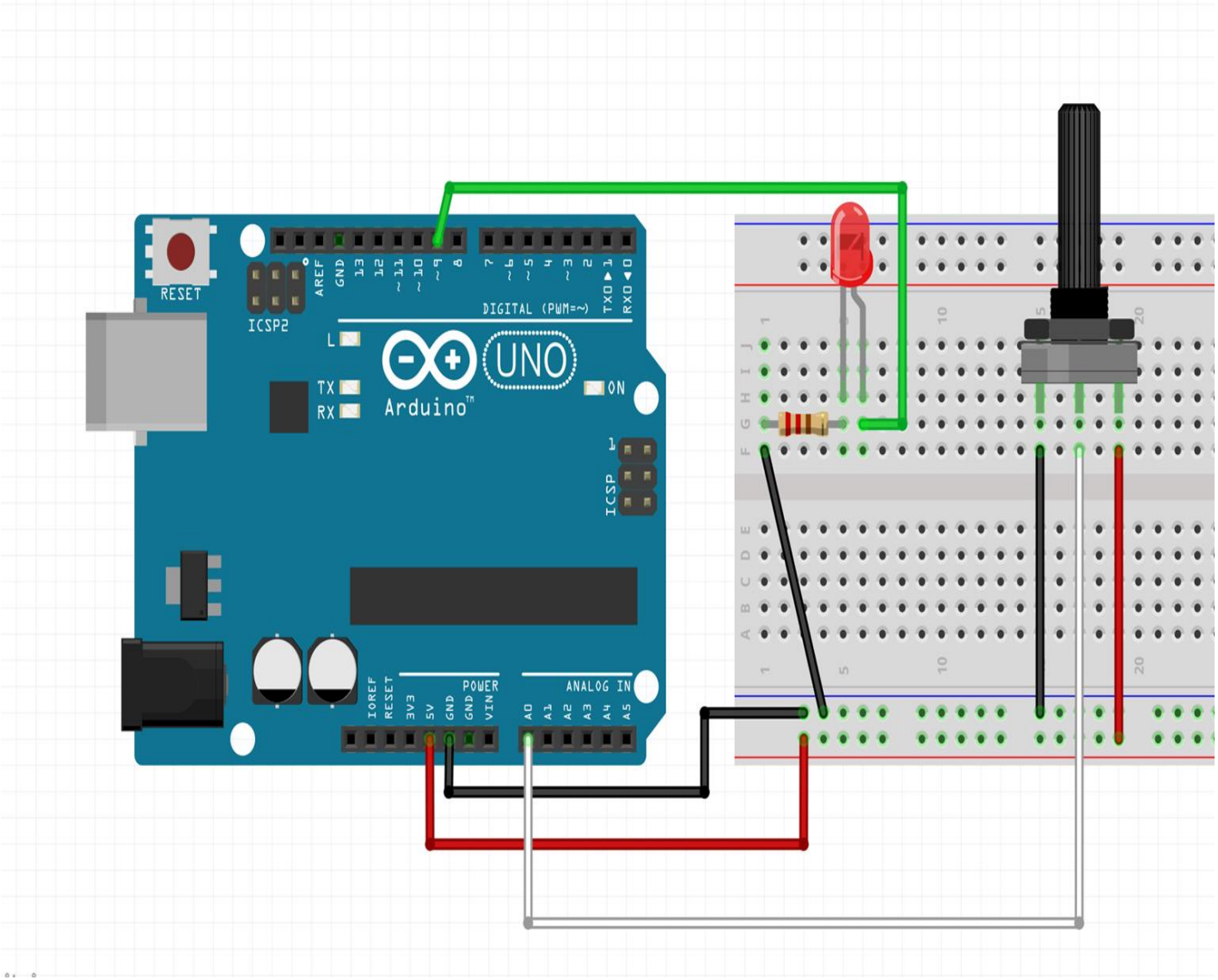

File > Examples > Basic > AnalogReadSerial

```
void setup() {
  // initialize serial communication at 9600 bits per second:
  Serial.begin(9600);
}

// the loop routine runs over and over again forever:
void loop() {
  // read the input on analog pin 0:
  int sensorValue = analogRead(A0);
  // print out the value you read:
  Serial.println(sensorValue);
  delay(1);        // delay in between reads for stability
}
```

File > Examples > Basic > AnalogReadSerial

```
void setup() {
  // initialize serial communication at 9600 bits per second:
  Serial.begin(9600);
}

// the loop routine runs over and over again forever:
void loop() {
  // read the input on analog pin 0:
  int sensorValue = analogRead(A0);
  // print out the value you read:
  Serial.println(sensorValue);
  delay(1);        // delay in between reads for stability
}
```

File > Examples > Basic > AnalogReadSerial

```
void setup() {
  // initialize serial communication at 9600 bits per second:
  Serial.begin(9600);
}

// the loop routine runs over and over again forever:
void loop() {
  // read the input on analog pin 0:
  int sensorValue = analogRead(A0);
  // print out the value you read:
  Serial.println(sensorValue);
  delay(1);        // delay in between reads for stability
}
```

Connecting the Input

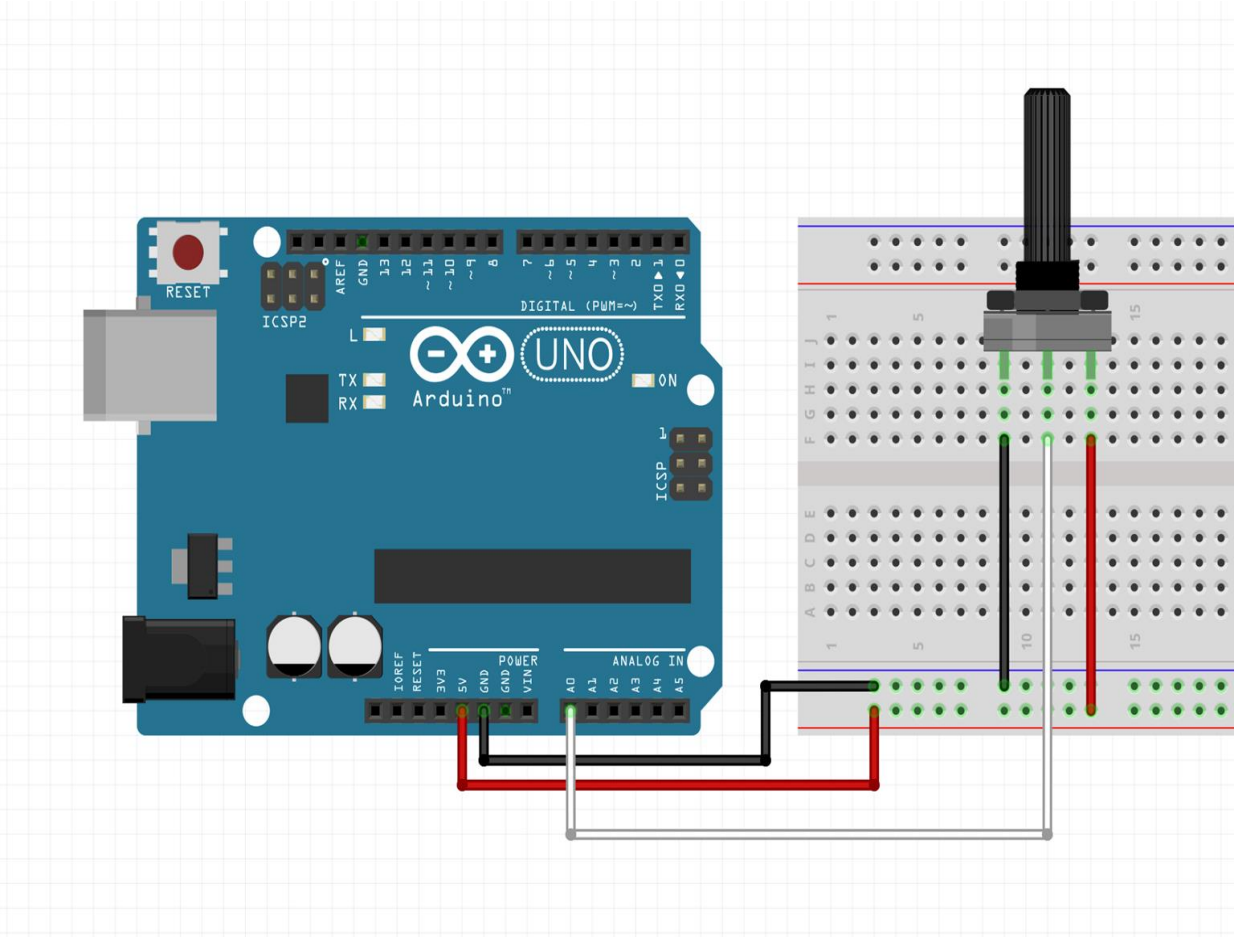

Serial Monitor

AnalogReadSerial | Arduino 1.0.5

AnalogReadSerial

```
/*
  AnalogReadSerial
  Reads an analog input on pin 0, prints the result to the serial mon
  Attach the center pin of a potentiometer to pin A0, and the outside

 This example code is in the public domain.
 */

// the setup routine runs once when you press reset:
void setup() {
  // initialize serial communication at 9600 bits per second:
  Serial.begin(9600);
}

// the loop routine runs over and over again forever:
void loop() {
  // read the input on analog pin 0:
  int sensorValue = analogRead(A0);
  // print out the value you read:
  Serial.println(sensorValue);
  delay(1);        // delay in between reads for stability
}
```

1 Arduino Uno on /dev/tty.usbserial-A601LP1C

/dev/tty.usbserial-A601LP1C

Send

```
215
234
233
213
214
235
234
214
215
235
235
215
215
236
235
216
216
237
237
```

Autoscroll Both NL & CR 9600 baud

Analog Output

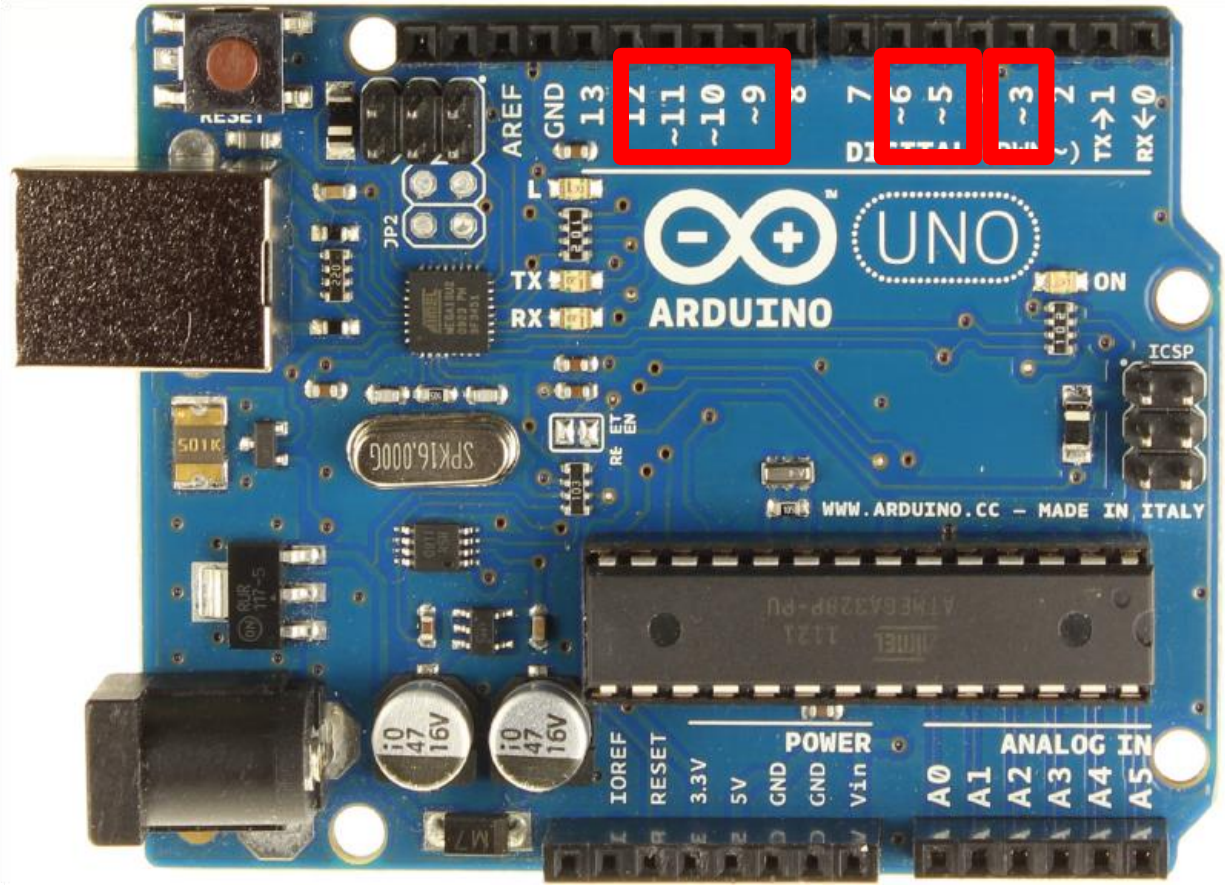

Adding to the Code

```
//use pin 9 because it can write analog values
int ledPin = 9;

void setup() {
  // initialize serial communication at 9600 bits per second:
  Serial.begin(9600);
  //set up the pin as an output
  pinMode(ledPin, OUTPUT);
}

// the loop routine runs over and over again forever:
void loop() {
  // read the input on analog pin 0:
  int sensorValue = analogRead(A0);
  // print out the value you read:
  Serial.println(sensorValue);
  analogWrite(ledPin, 255);
  delay(1);        // delay in between reads for stability
}
```

Connecting the LED

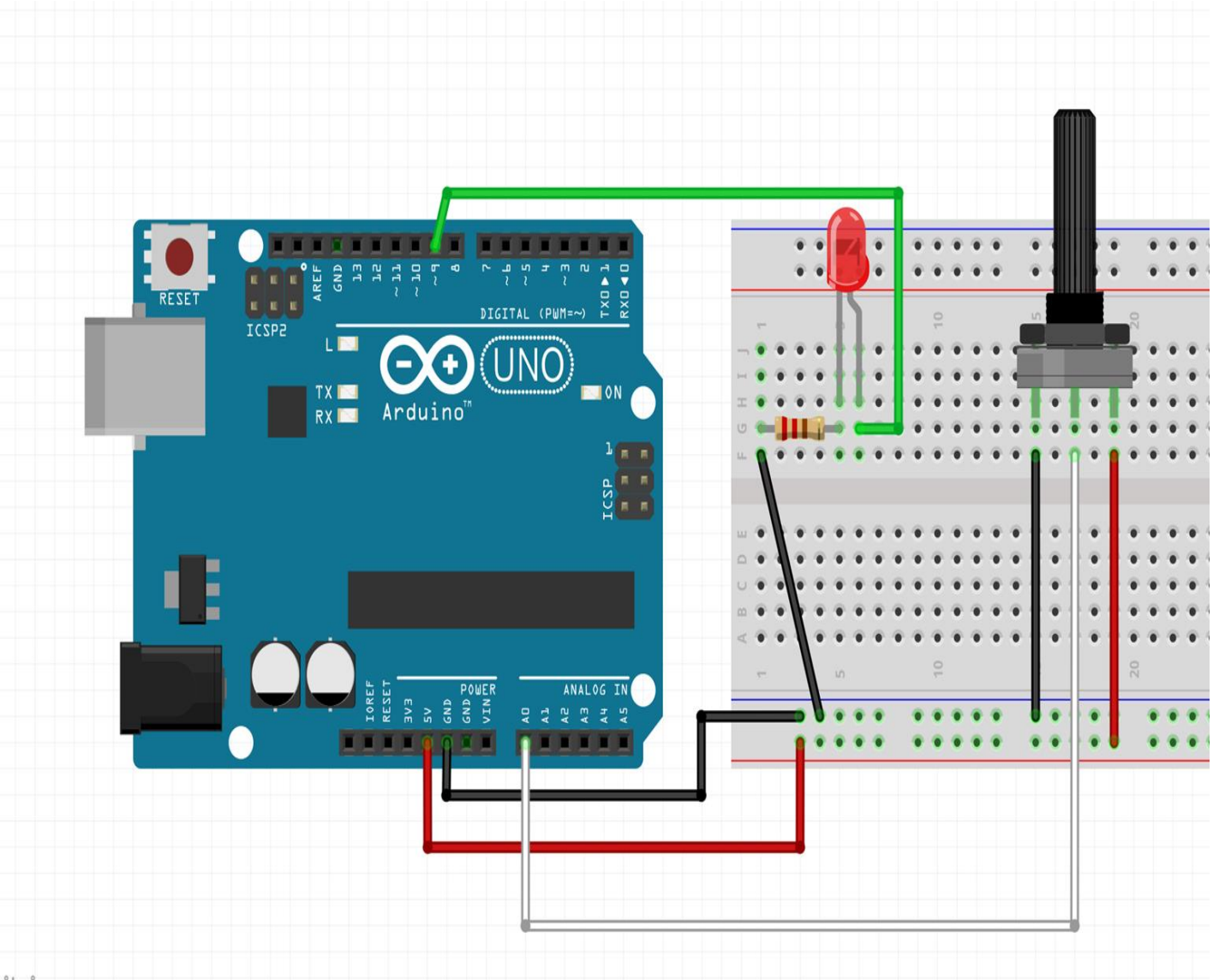

Adding to the Code

```
int ledPin = 9;
int brightness = 0;

void setup() {
  // initialize serial communication at 9600 bits per second:
  Serial.begin(9600);
  //set up the pin as an output
  pinMode(ledPin, OUTPUT);
}

// the loop routine runs over and over again forever:
void loop() {
  // read the input on analog pin 0:
  int sensorValue = analogRead(A0);
  // print out the value you read:
  Serial.println(sensorValue);
  //make the value of the brightness be between 0 and 255
  brightness = map(sensorValue, 0, 1024, 0, 255);
  //set your pin brightness to the brightness value
  analogWrite(ledPin, brightness);
  delay(1);        // delay in between reads for stability
}
```

PWM

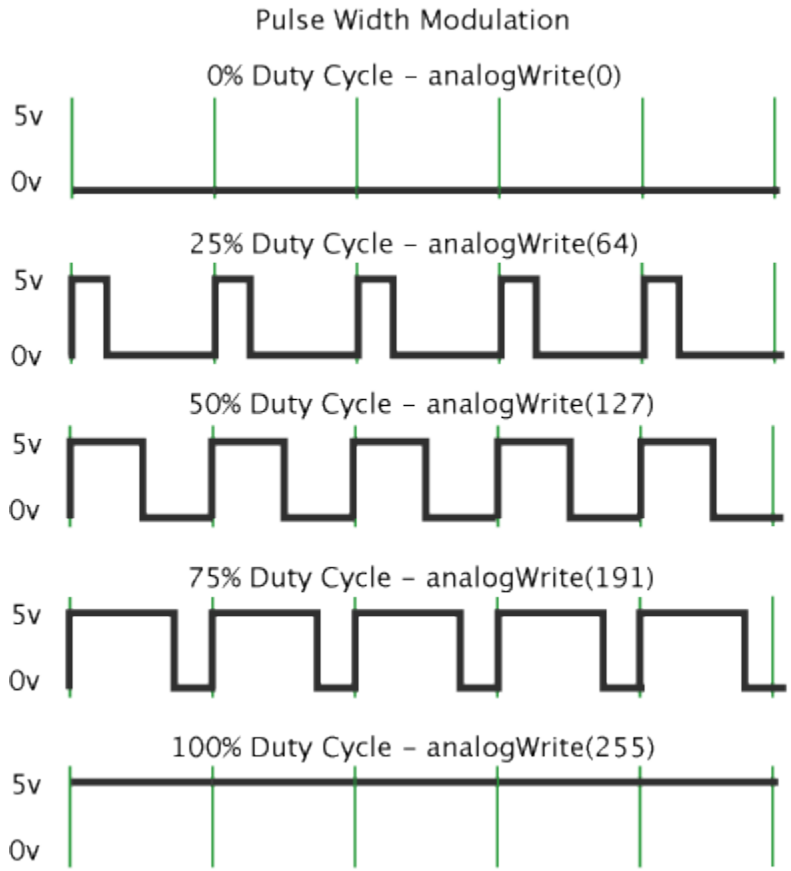

https://www.arduino.cc/en/Tutorial/PWM

PWM - pulseIn()

The pulseIn() waits for the pin to go HIGH, starts timing, then waits for the pin to go LOW and stops timing. Returns the length of the pulse in microseconds.

```
byte PWM_PIN = 3;

int pwm_value;

void setup() {
  pinMode(PWM_PIN, INPUT);
  Serial.begin(115200);
}

void loop() {
  pwm_value = pulseIn(PWM_PIN, HIGH);
  Serial.println(pwm_value);
}
```

```
void setup() {
  pinMode(3,OUTPUT);
}

void loop() {
  analogWrite(3,255);
  delay (100);
  analogWrite(3,0);
  delay (100);

}
```

Photocell

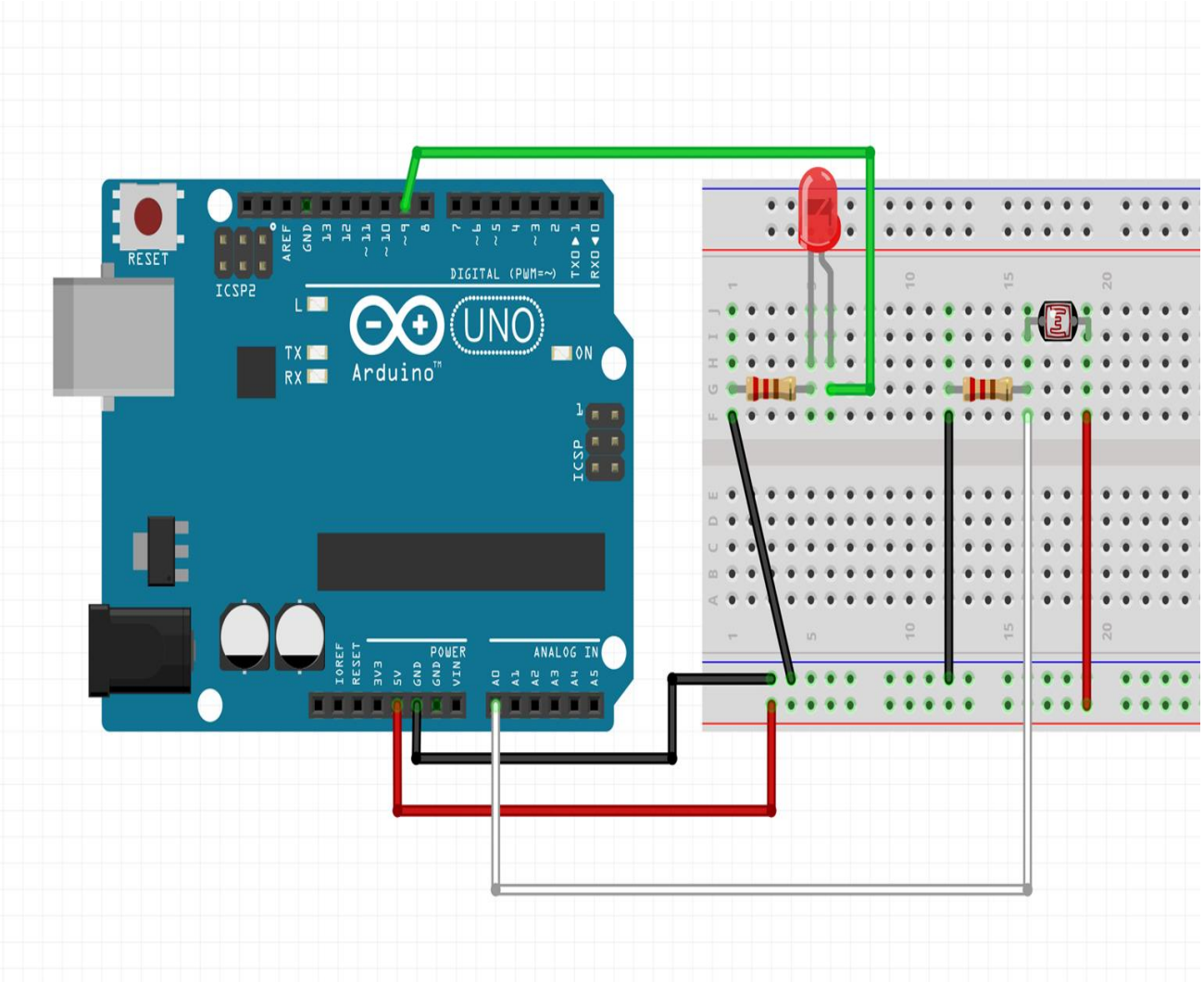
RESET
ICSP2
AREF
GND
13
12
~11
~10
~9
8
7
~6
~5
4
~3
2
TX0 ▶ 1
RX0 ◀ 0
DIGITAL (PWM=~)
L
TX
RX
UNO
Arduino
ON
ICSP
IOREF
RESET
3V3
5V
GND
GND
VIN
POWER
ANALOG IN
A0
A1
A2
A3
A4
A5

```
int ledPin = 9;
int brightness = 0;
int sensorLow = 0;
int sensorHigh = 15;

void setup() {
  // initialize serial communication at 9600 bits per second:
  Serial.begin(9600);
  //set up the pin as an output
  pinMode(ledPin, OUTPUT);
}

// the loop routine runs over and over again forever:
void loop() {
  // read the input on analog pin 0:
  int sensorValue = analogRead(A0);
  // print out the value you read:
  Serial.println(sensorValue);
  //make the value of the brightness be between 0 and 255
  brightness = map(sensorValue, sensorLow, sensorHigh, 0, 255);
  //set your pin brightness to the brightness value
  analogWrite(ledPin, brightness);
  delay(300);        // delay in between reads for stability
}
```

Flex Sensor

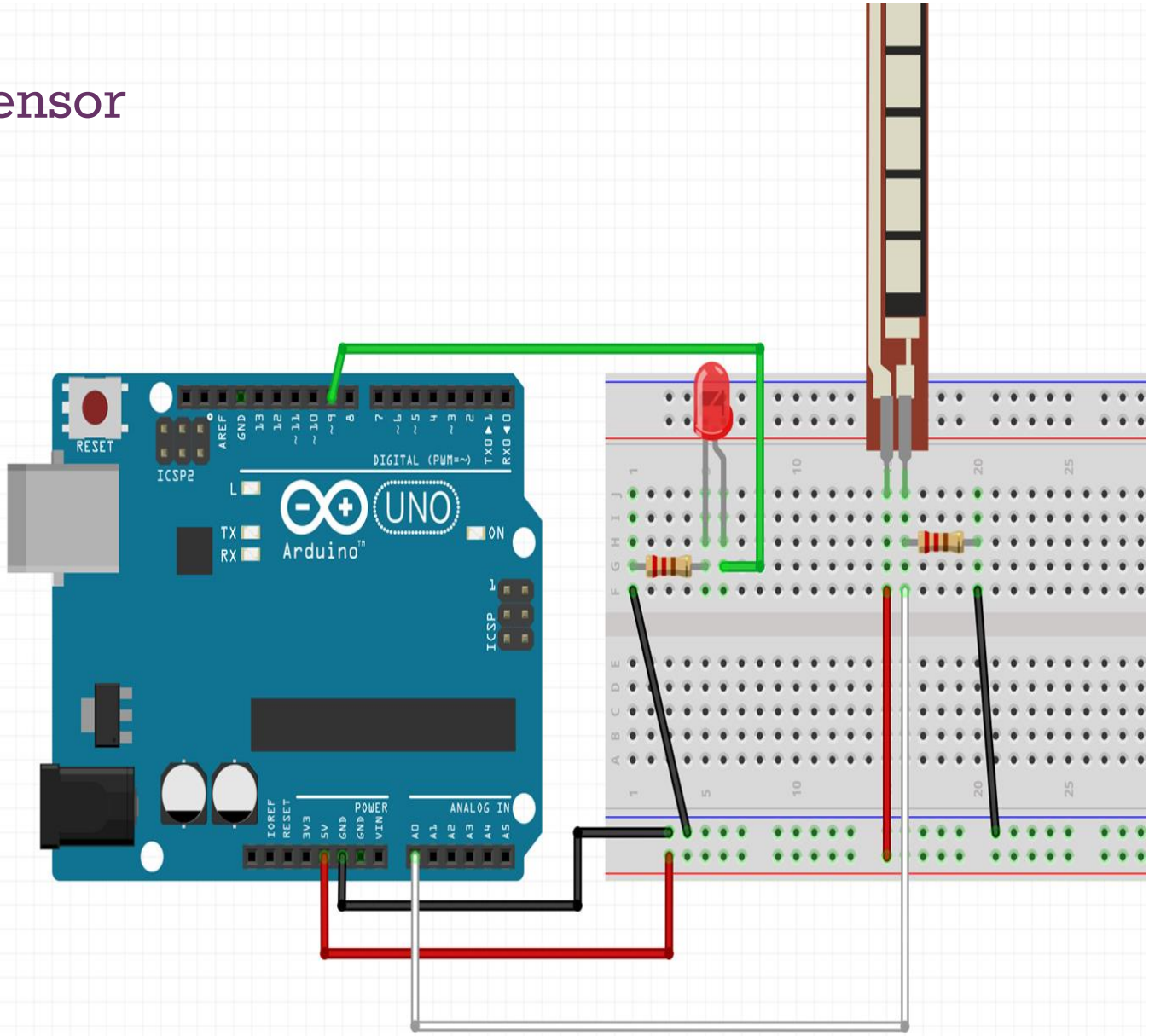
RESET
ICSP2
AREF
GND
13
12
~11
~10
~9
8
7
~6
~5
4
~3
2
TX→1
RX←0
DIGITAL (PWM=~)
L
TX
RX
UNO
Arduino
ON
ICSP
IOREF
RESET
3V3
5V
GND
GND
VIN
POWER
A0
A1
A2
A3
A4
A5
ANALOG IN

Soldering!

https://learn.sparkfun.com/tutorials/how-to-solder---through-hole-soldering

Homework

Get the class code up and running.

Then, try it with a sensor we didn't cover in class.

Take a video.

Push code to git.

Write README.md, put your video link in there

Bring your project to class _ we'll be sharing our demos!