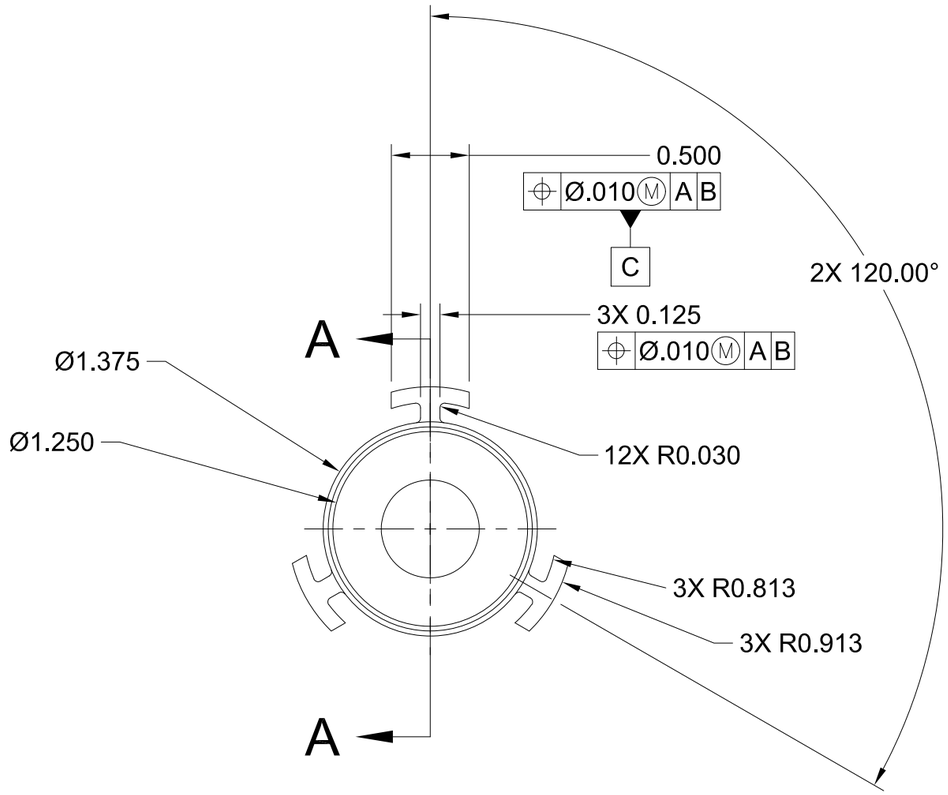

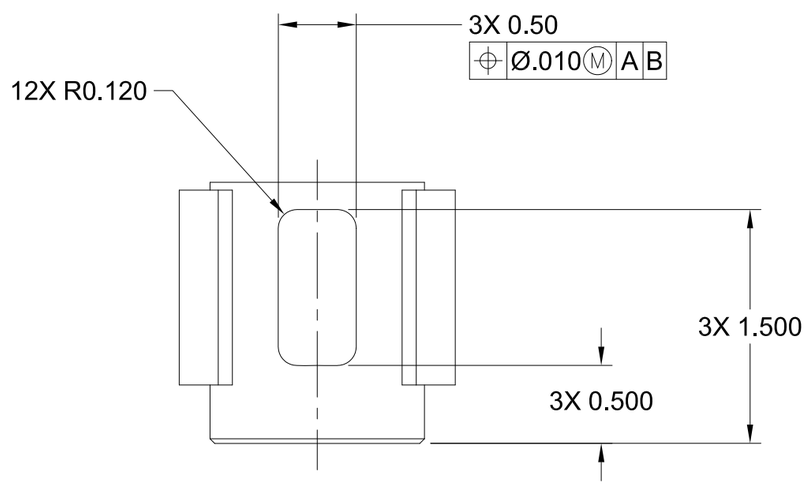

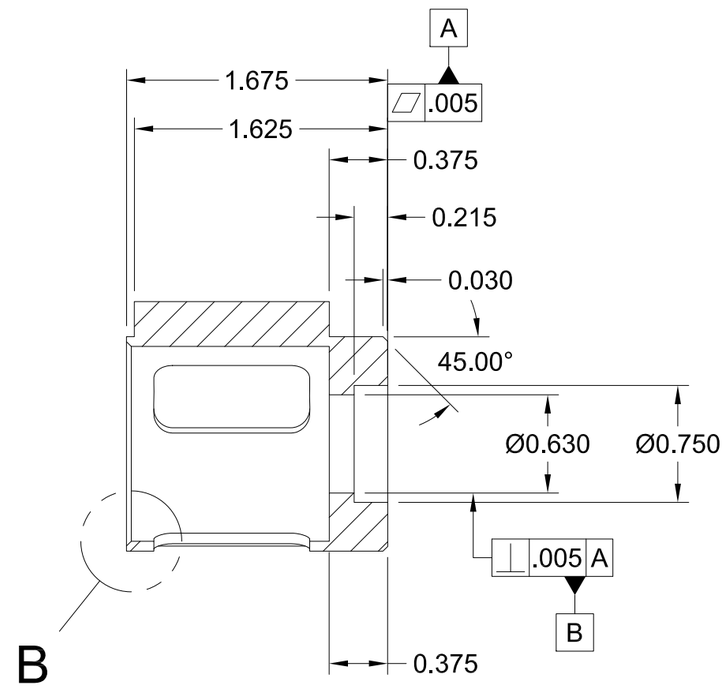

SECTION A-A
SCALE 1:1

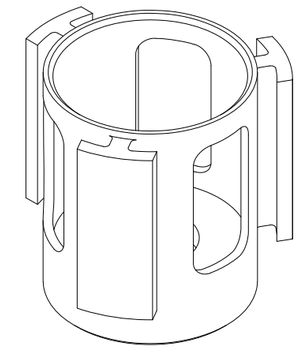

ISO VIEW
REFERENCE ONLY

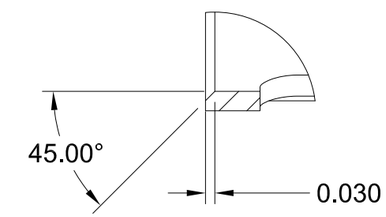

DETAIL B
SCALE 2:1

UNLESS OTHERWISE SPECIFIED
X.XXX ± .005
X.XX ± .010
X.X ± .030
XX.XX° ± 0.1°
MIN SURFACE ROUGHNESS
Ra 128

PROJECT
ETDA-BLDC-V1

TITLE
STATOR, MOTOR

APPROVED	SIZE	CODE	DWG NO	REV
CHECKED	B		ETDA-BLDC-V1-1	-
DRAWN F. LAST 2/27/2023	SCALE 1:1	WEIGHT	SHEET 1/1	