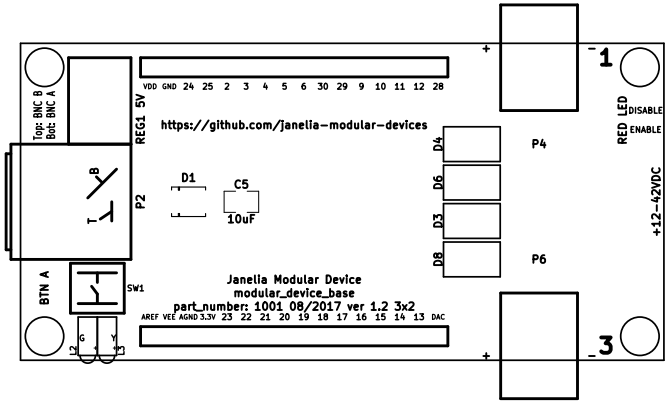
VDD GND 24 25 2 3 4 5 6 30 29 9 10 11 12 28
Top: BNC B
Bot: BNC A
REG1 5V
https://github.com/janelia-modular-devices
D1
C5
10uF
P2
B
T
D4
D6
D3
D8
P4
P6
RED LED
DISABLE
ENABLE
+12-42VDC
1
3
BTN A
SW1
Janelia Modular Device
modular_device_base
part_number: 1001 08/2017 ver 1.2 3x2
AREF VEE AGND 3.3V 23 22 21 20 19 18 17 16 15 14 13 DAC
G
Y
L2
L3