DE LORENZO ENGINEERING TRAINING SOLUTIONS

AV. ACADÊMICO HÉLIO RAMOS, 60 - 1º ANDAR
RECIFE - PE
Tel. (81) 3038-7777

DE LORENZO
Engineering Training Solutions

Company / Client	XXXXXX
Project description	ELECTRICAL PROJECT SIMULATOR
Drawing number	
Manufacturer (Company)	DE LORENZO ENGINEERING TRAINING SOLUTIONS
Project name	MK1402261325R00_PE_GA_MKSIM_GYPSUM_LINE
Type	AT78
Installation location	+ET1

Created in 4/12/2007
Edited in 29/6/2015 of (abbreviation)USER Number of pages 40

POWER PANEL

POWER, PROTECTIONS, MOTOR COMMANDS

			Date	20/5/2015			POWER PANEL		= PN1
			Editor.	USER					+
			Verif		ELECTRICAL PROJECT SIMULATOR	DE LORENZO Engineering Training Solutions		De Lorenzo - Engineering Training Solutions	
Change	Date	Name	Orig		In place of / Replaced by			www.delorenzoglobal.com	Page 2 / Pages 40

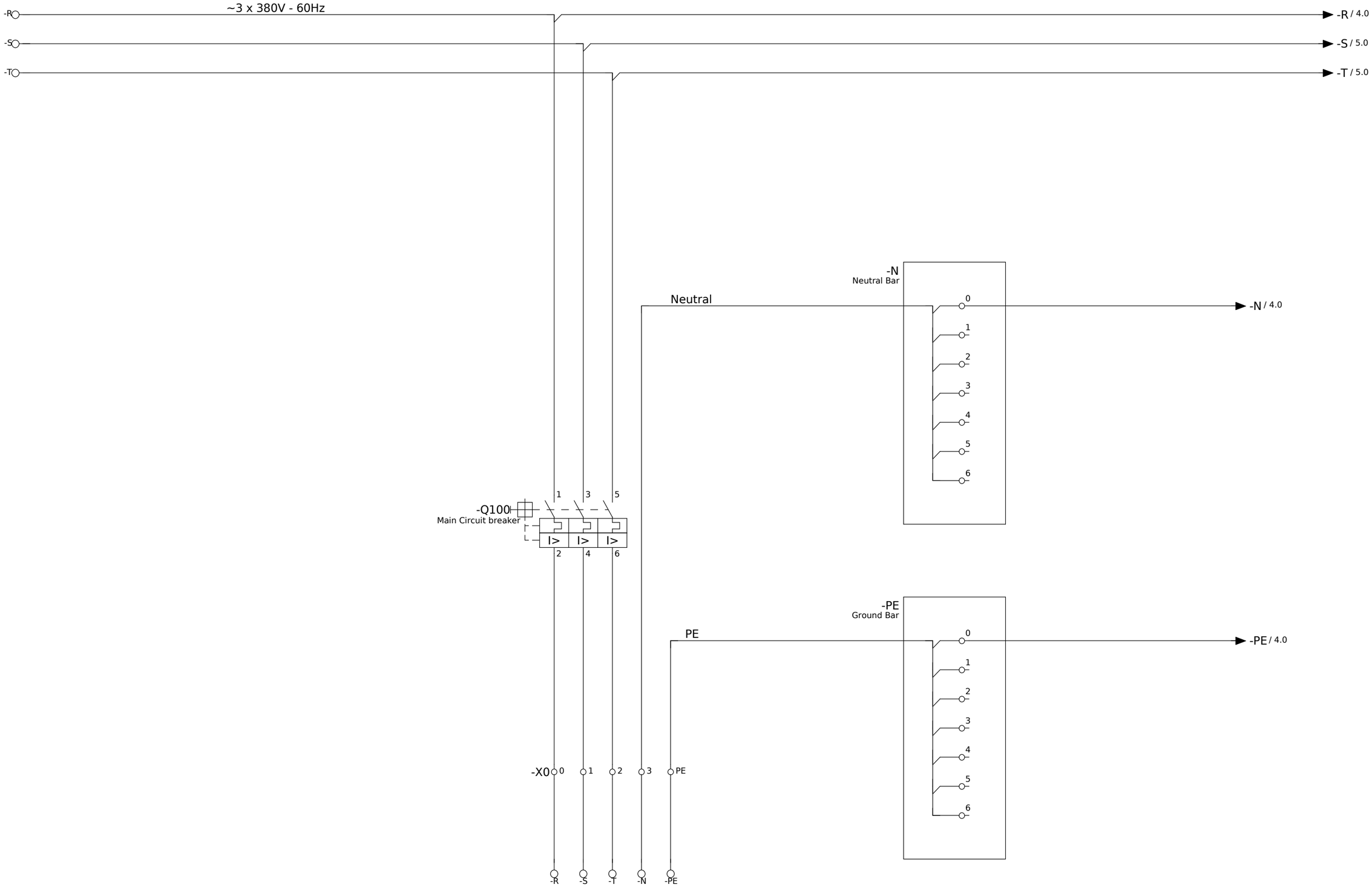

PANEL GENERAL
POWER-SUPPLY INPUT
380V / 60Hz

3 3

			Date	20/5/2015				= PN1
			Editor.	USER				+
			Verif		ELECTRICAL PROJECT SIMULATOR			Page 3
Change	Date	Name	Orig		In place of	Replaced by		Pages 40

DE LORENZO
Engineering Training Solutions

POWER-SUPPLY INPUT

De Lorenzo - Engineering Training Solutions

www.delorenzoglobal.com

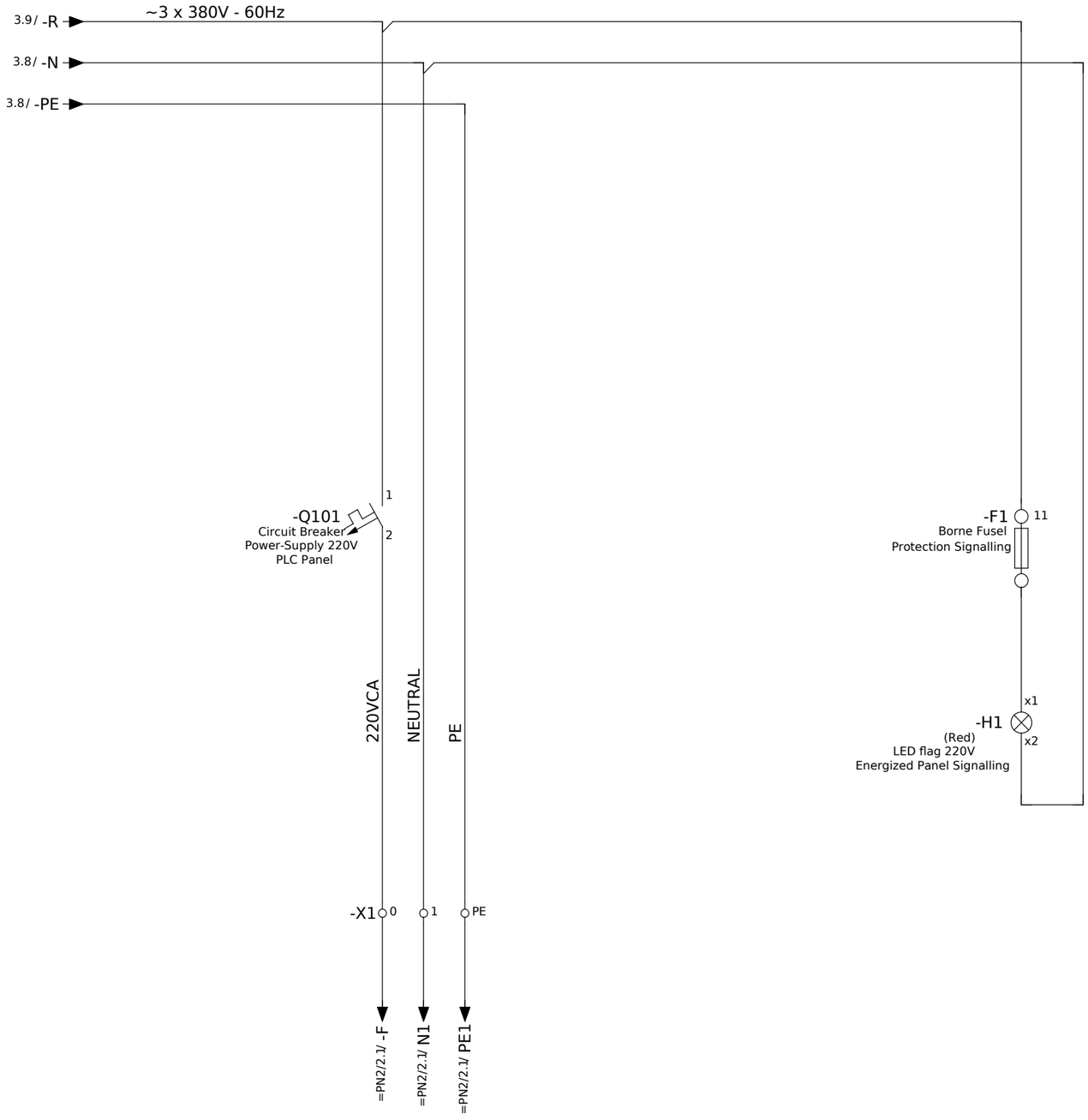

POWER-SUPPLY 220V

GOES TO PN2

CONTROL PANEL (PLC)

PANEL SIGNALLING

ENERGIZED

			Date	20/5/2015	ELECTRICAL PROJECT SIMULATOR		AUXILIARIES	De Lorenzo - Engineering Training Solutions	= PN1
			Editor.	USER					+
			Verif					www.delorenzoglobal.com	Page 4
Change	Date	Name	Orig		In place of	Replaced by			Pages 40

5.9/ -R
3.9/ -S
3.9/ -T
~3 x 380V - 60Hz

-R / 5.0
-S / 6.0
-T / 6.0

=PN2
Control Panel (PLC)
Module A2.1

-QM1
=PN2/8.1
Circuit Breaker
Motor 1 Protection
I> I> I>
1 3 5
2 4 6

-KM1
=PN2/5.1
Contactor
(Security Aux. Motor 1)
1 3 5
2 4 6

-PE
/3.6
2

-XR2.1_0
=PN2/19.2
11
14

-XR2.1_1
=PN2/19.2
11
14

-XA2.1 0 1 2
-XCM1 0 1 2

-U1
=PN2/8.3
Frequency Inverter
(Motor 1 Command)

U1 V1 W1 PE
9 12 13 AI0- AI0+
+24VCC
ON
OFF
DIRECT
INVERSE

FREQUENCY INVERTER
ACS355 - ABB

U2 V2 W2 PE
R0COM 17
R0NC 18
R0NO 19
D0SRC 20
D0OUT 21
D0GND 22
0V 10
DCOM 11

-XM1 1 2 3 PE
-XCM1 4 5 6

=PN2/3.1/ =PN2-0V
-0V/ 6.4

=FIELD
U1 V1 W1
-M1
V=380V
P=1,5 kW
I=3,58 A
M
3~
PE
Motor outside of the electrical panel

=PN2
-XA1.1 2 3
I0.2
SCREW CONVEYOR
ON
I0.3
SCREW CONVEYOR
FAILURE
Control Panel(PLC)
Module A1.1

5 5

			Date	17/6/2015	ELECTRICAL PROJECT SIMULATOR	
			Editor.	USER		
			Verif			
Change	Date	Name	Orig		In place of	Replaced by

DE LORENZO
Engineering Training Solutions

SCREW CONVEYOR

De Lorenzo - Engineering Training Solutions
www.delorenzoglobal.com

= PN1
+
Page 5
Pages 40

6.9/ -R
5.9/ -S
5.9/ -T
~3 x 380V - 60Hz

-R / 6.0
-S / 7.0
-T / 7.0

-QM2
=PN2/8.5
Circuit Breaker
Motor 2 Protection
I> I> I>
1 3 5
2 4 6

-KM2
=PN2/5.2
Contactor
(Security Aux. Motor 2)
1 3 5
2 4 6

-PE
/3.6
3

=PN2
Control Panel (PLC)
Module A2.1

-XR2.1_2
=PN2/19.3
11
14

-XR2.1_3
=PN2/19.4
11
14

-XA2.1
3 4 5

-XCM2
0 1 2

-U2
=PN2/8.7
Frequency Inverter
(Motor 2 Command)

U1 V1 W1 PE

9 12 13 AI0- AI0+

+24VCC
ON
OFF
SPEED
HIGH/LOW

FREQUENCY INVERTER
ACS355 - ABB

U2 V2 W2 PE

R0COM 17
R0NC 18
R0NO 19
D0SRC 20
D0OUT 21
D0GND 22
0V 10
DCOM 11

-XM2
1 2 3 PE

-XCM2
4 5 6

5.8/ 0V
-0V / =PN2/5.8

=FIELD

U1 V1 W1
M
3~
PE

-M2
V=380V
P=1,5 kW
I=3,58 A

Motor outside of the electrical panel

=PN2
-XA1.1
6 7

I0.6
MIXER ON

I0.7
FAILED MIXER

Control Panel(PLC)
Module A1.1

			Date	20/5/2015			MIXER	De Lorenzo - Engineering Training Solutions	= PN1
			Editor.	USER					+
			Verif		ELECTRICAL PROJECT SIMULATOR			www.delorenzoglobal.com	Page 6
Change	Date	Name	Orig		In place of	Replaced by			Pages 40

DE LORENZO
Engineering Training Solutions

7.9/ -R
6.9/ -S
6.9/ -T
~3 x 380V - 60Hz

-R / 7.0
-S / 8.0
-T / 8.0

-QM3
=PN2/9.1
Circuit Breaker
Motor 3 Protection
I> I> I>
1 3 5
2 4 6

-KM3
=PN2/5.3
Contactor
(Security Aux. Motor 3)
1 3 5
2 4 6

-PE
/3.6
4

=PN2
Control Panel (PLC)
Module A2.1

-XR2.1_4
=PN2/19.5
11
14

-XR2.1_5
=PN2/19.6
11
14

-XA2.1
6 7 8

-XCM3
0 1 2

-U3
=PN2/9.3
Frequency Inverter
(Motor 3 Command)

U1 V1 W1 PE
9 12 13 AI0- AI0+
+24VCC
ON
OFF
SPEED
HIGH/LOW

FREQUENCY INVERTER
ACS355 - ABB

U2 V2 W2 PE
R0COM R0NC R0NO D0SRC D0OUT D0GND 0V DCOM
17 18 19 20 21 22 10 11

-XM3
1 2 3 PE

= FIELD

Motor outside of the electrical panel

			Date	20/5/2015		RESERVE	De Lorenzo - Engineering Training Solutions	= PN1
			Editor.	USER				+
			Verif		ELECTRICAL PROJECT SIMULATOR		www.delorenzoglobal.com	Page 7
Change	Date	Name	Orig		In place of / Replaced by			Pages 40

DE LORENZO
Engineering Training Solutions

8.9/ -R
7.9/ -S
7.9/ -T
~3 x 380V - 60Hz

-R / 8.0
-S / 9.0
-T / 9.0

-QM4
=PN2/9.5
Circuit Breaker
Motor 4 Protection
I> I> I>
1 3 5
2 4 6

-KM4
=PN2/5.4
Contactor
(Security Aux. Motor 4)
1 3 5
2 4 6

-PE
/3.6
4

=PN2
Control Panel (PLC)
Module A2.1

-XR2.1_6
=PN2/19.7
-XR2.1_7
=PN2/19.8
11 14 11 14

-XA2.1
9 10 11

-XCM4
0 1 2

-U4
=PN2/9.7
Frequency Inverter
(Motor 4 Command)

U1 V1 W1 PE
9 12 13 AI0- AI0+
+24VCC
ON
OFF
SPEED
HIGH/LOW

FREQUENCY INVERTER
ACS355 - ABB

U2 V2 W2 PE
R0COM R0NC R0NO D0SRC D0OUT D0GND 0V DCOM
17 18 19 20 21 22 10 11

-XM4 1 2 3 PE

=FIELD
Motor outside of the electrical panel

			Date	20/5/2015	ELECTRICAL PROJECT SIMULATOR	RESERVE	De Lorenzo - Engineering Training Solutions
			Editor.	USER			= PN1
			Verif				+
Change	Date	Name	Orig		In place of / Replaced by		www.delorenzoglobal.com / Page 8 / Pages 40

DE LORENZO
Engineering Training Solutions

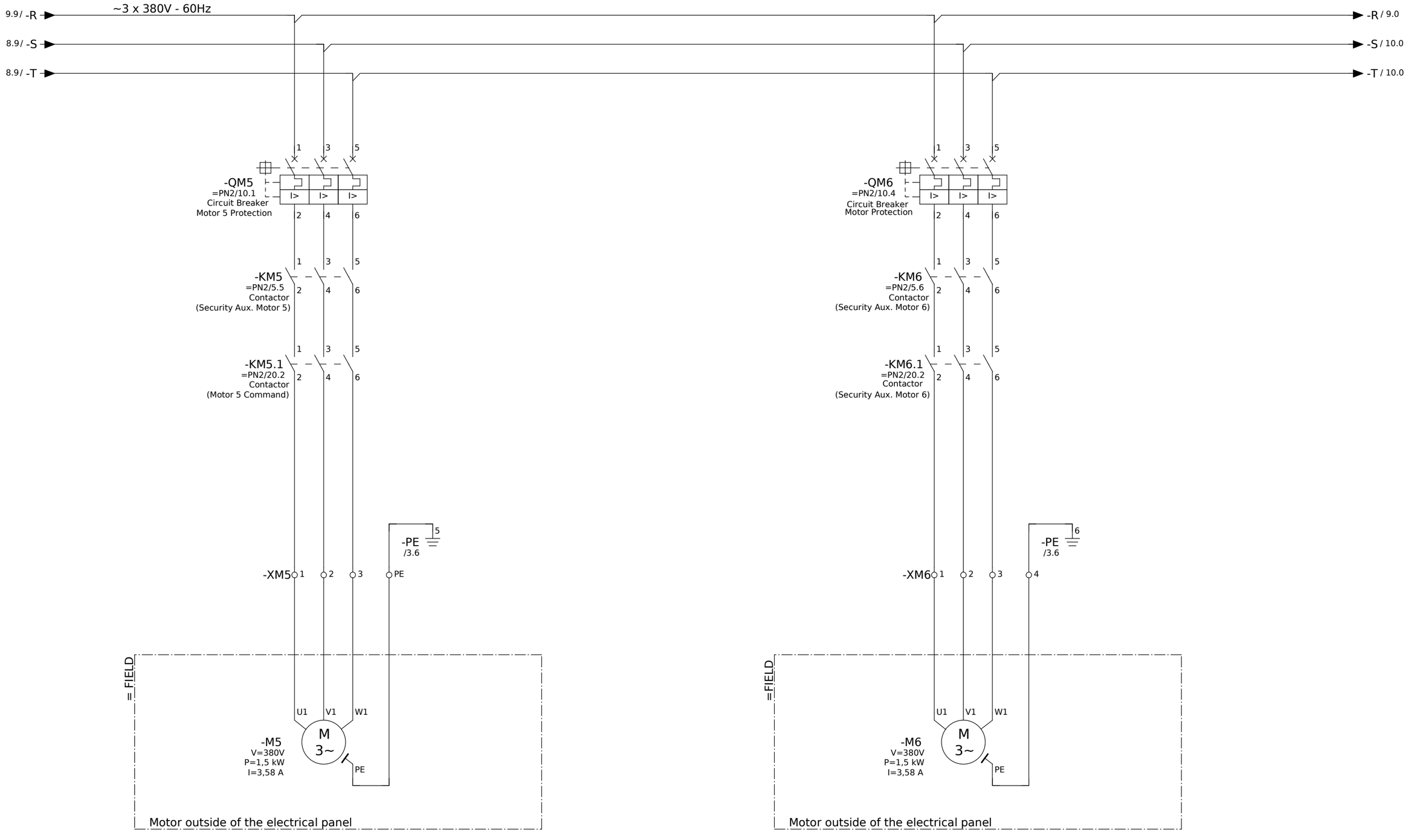

			Date	20/5/2015	ELECTRICAL PROJECT SIMULATOR		INPUT CONVEYOR/SCALE CONVEYOR	De Lorenzo - Engineering Training Solutions
			Editor.	USER				= PN1
			Verif					+
Change	Date	Name	Orig		In place of	Replaced by		www.delorenzoglobal.com

DE LORENZO
Engineering Training Solutions

Page 9
Pages 40

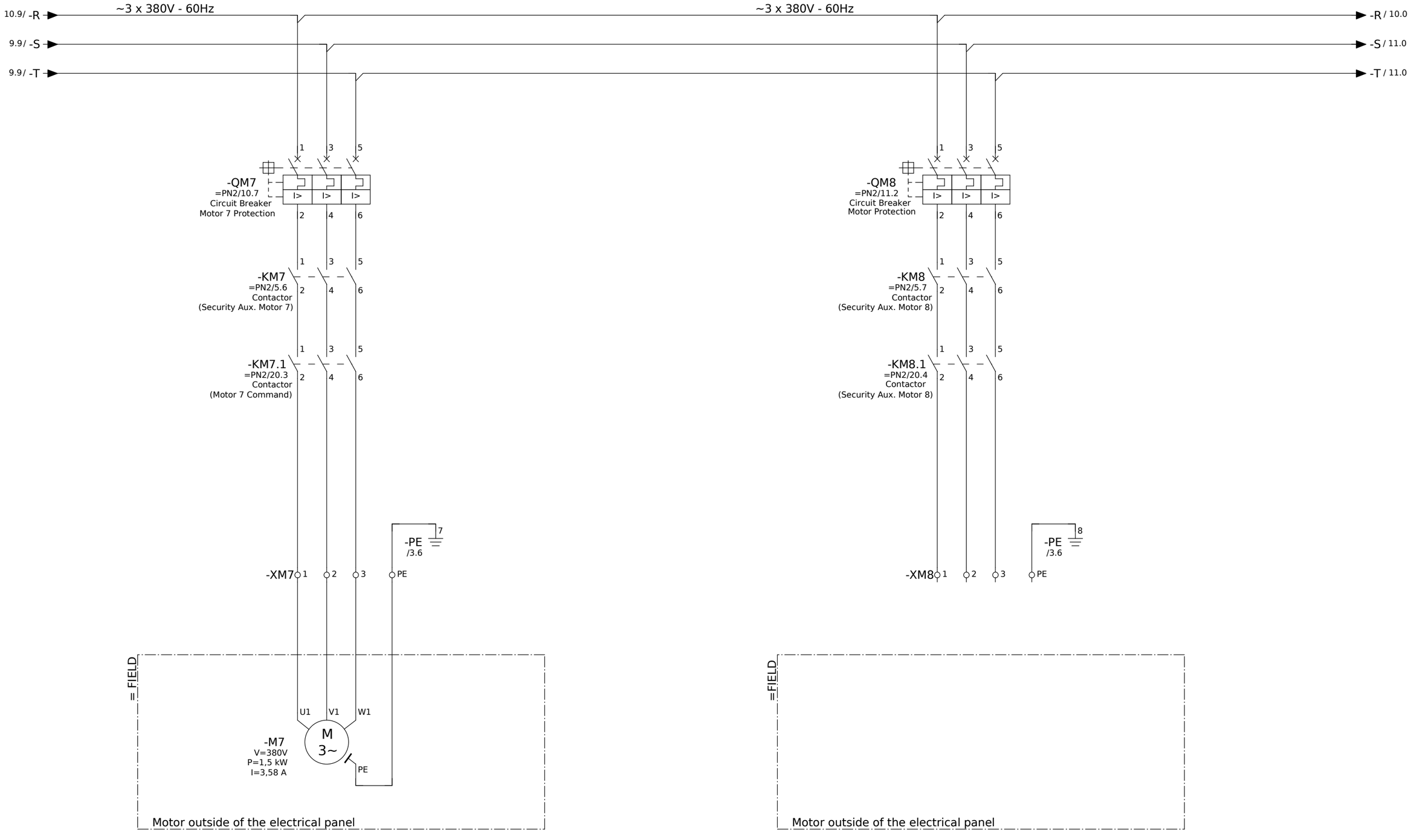

			Date	20/5/2015	ELECTRICAL PROJECT SIMULATOR		MIXER CONVEYOR/ RESERVE	De Lorenzo - Engineering Training Solutions	= PN1
			Editor.	USER					+
			Verif					www.delorenzoglobal.com	Page 10
Change	Date	Name	Orig		In place of	Replaced by			Pages 40

11.9/ -R

10.9/ -S

10.9/ -T

-R / 11.0

-S / 12.0

-T / 12.0

-QM9
=PN2/11.5
Circuit Breaker
Motor 9 Protection

-KM9
=PN2/5.8
Contactor
(Security Aux. Motor 9)

-KM9.1
Contactor
(Motor 9 Command)

-PE
/3.6

-XM9

-QM10
=PN2/11.8
Circuit Breaker
Motor Protection

-KM10
=PN2/6.2
Contactor
(Security Aux. Motor 8)

-KM10.1
Contactor
(Motor 10 command)

-XM10

= FIELD

Motor outside of the electrical panel

=FIELD

Motor outside of the electrical panel

			Date	20/5/2015	ELECTRICAL PROJECT SIMULATOR		RESERVE	De Lorenzo - Engineering Training Solutions	= PN1
			Editor.	USER					+
			Verif					www.delorenzoglobal.com	Page 11
Change	Date	Name	Orig		In place of	Replaced by			Pages 40

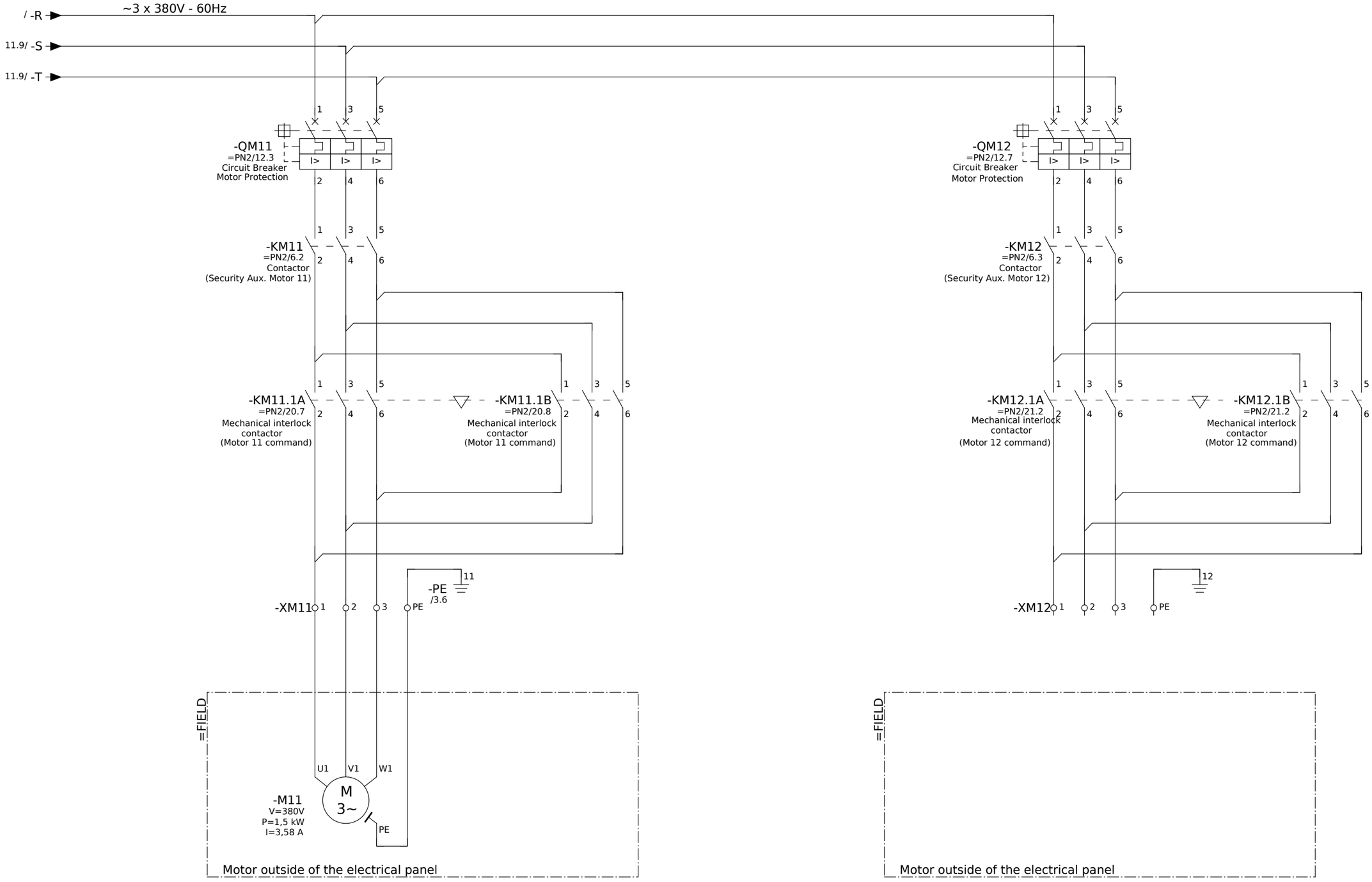

			Date	20/5/2015	ELECTRICAL PROJECT SIMULATOR		MIXER UP DOWN/RESERVE	De Lorenzo - Engineering Training Solutions
			Editor.	USER				= PN1
			Verif					+
Change	Date	Name	Orig		In place of	Replaced by		www.delorenzoglobal.com

DE LORENZO
Engineering Training Solutions

Page 12
Pages 40

0	1	2	3	4	5	6	7	8	9

POWER PANEL

DE LORENZO

50X80

Q100

Q101

50X80

QM1 QM2 QM3 QM4 QM5 QM6 QM7 QM8 QM9 QM10 QM11 QM12

50X80

KM1 KM2 KM3 KM4 KM5 KM5.1 KM6 KM6.1 KM7 KM7.1 KM8 KM8.1

50X80

50X80

KM9 KM9.1 KM10 KM10.1 KM11 KM11.1A KM11.1B KM12 KM11.1A KM11.1B

50X80

50X80

U1 U2 U3 U4

50X80

X0
X1
X2
XM1
XM2
XM3
XM4
XM5
XM6
XM7
XM8
XM9
XM10
XM11
XM12

XCM1
XCM2
XCM3
XCM4
XCM5
XCM6
XCM7
XCM8
XCM9
XCM10
XCM11
XCM12

XK1
XK2
F1

80X80

=PN2/1

=PN2/1

			Date	29/6/2015	ELECTRICAL PROJECT SIMULATOR		POWER PANEL LAYOUT	De Lorenzo - Engineering Training Solutions	= PN1
			Editor.	USER					+
			Verif					www.delorenzoglobal.com	Page 13
Change	Date	Name	Orig		In place of	Replaced by			Pages 40

DE LORENZO
Engineering Training Solutions

0

0	1	2	3	4	5	6	7	8	9

CONTROL PANEL
(P L C)

1 1

			Date	20/5/2015		DE LORENZO Engineering Training Solutions	CONTROL PANEL (PLC)	De Lorenzo - Engineering Training Solutions	= PN2
			Editor.	USER					+
			Verif		ELECTRICAL PROJECT SIMULATOR			www.delorenzoglobal.com	Page 14
Change	Date	Name	Orig		In place of / Replaced by				Pages 40

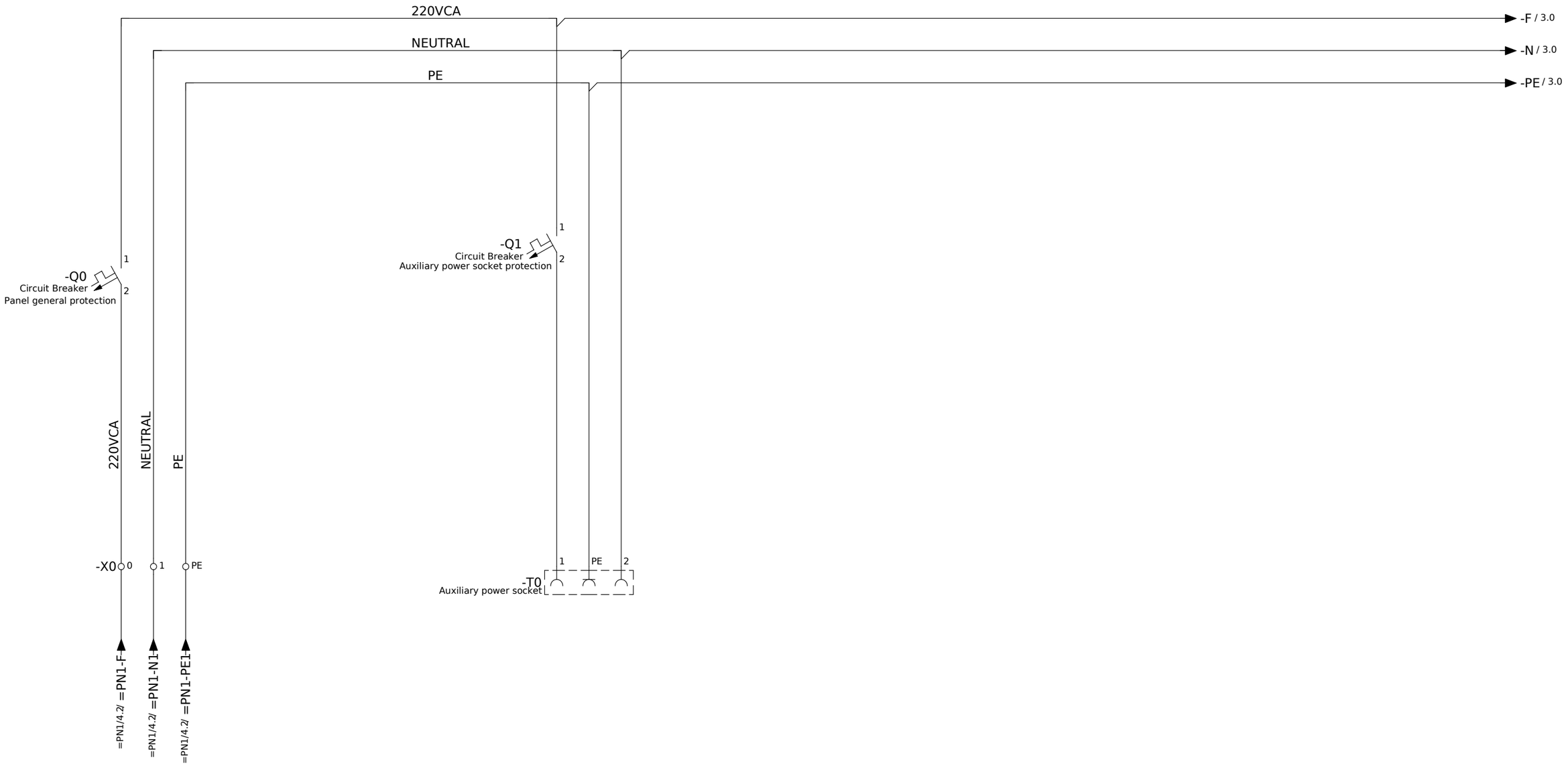

POWER-SUPPLY 220V

COMES FROM PN1

POWER PANEL

2

			Date	20/5/2015	ELECTRICAL PROJECT SIMULATOR	DE LORENZO Engineering Training Solutions	GENERAL POWER-SUPPLY 220V	De Lorenzo - Engineering Training Solutions	= PN2 +
			Editor.	USER					
			Verif					www.delorenzoglobal.com	Page 15
Change	Date	Name	Orig		In place of / Replaced by				Pages 40

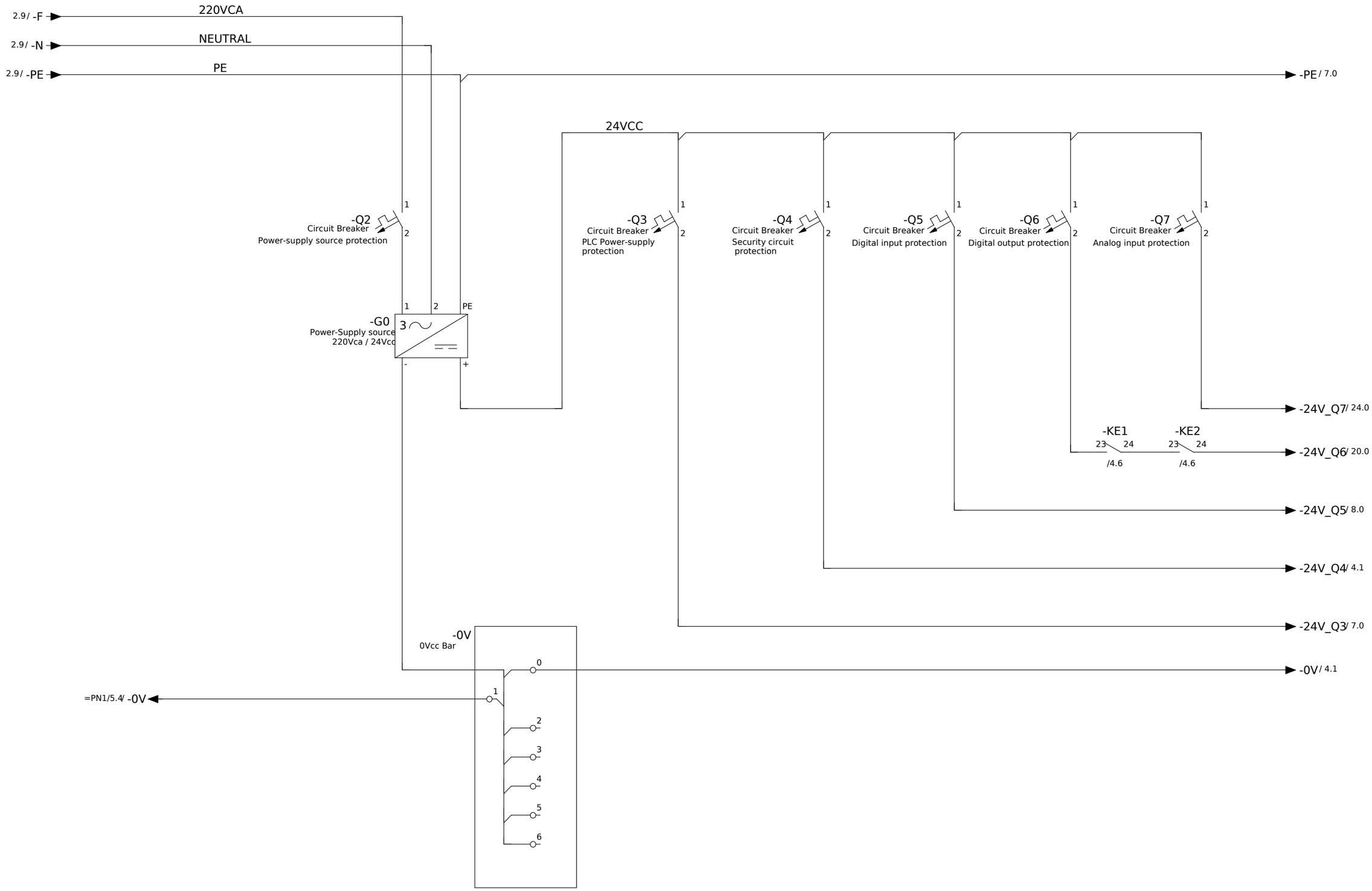

			Date	8/6/2015		POWER-SUPPLY 24VCC COMMAND	De Lorenzo - Engineering Training Solutions	= PN2	
			Editor.	USER				+	
			Verif		ELECTRICAL PROJECT SIMULATOR		www.delorenzoglobal.com	Page	16
Change	Date	Name	Orig		In place of / Replaced by			Pages	40

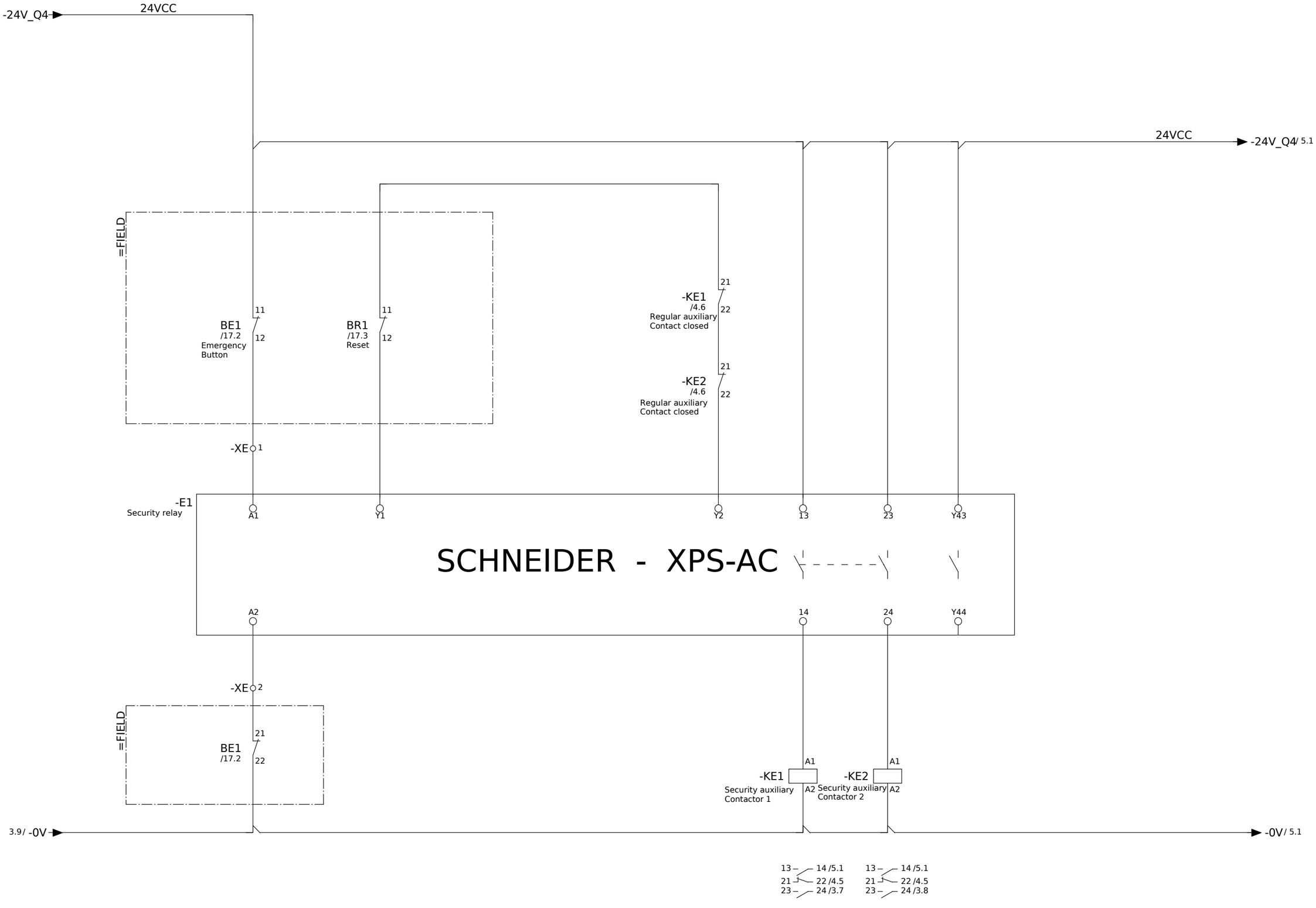

			Date	17/6/2015	ELECTRICAL PROJECT SIMULATOR		SECURITY RELAY 1	De Lorenzo - Engineering Training Solutions	= PN2
			Editor.	USER					+
			Verif					www.delorenzoglobal.com	Page 17
Change	Date	Name	Orig		In place of	Replaced by			Pages 40

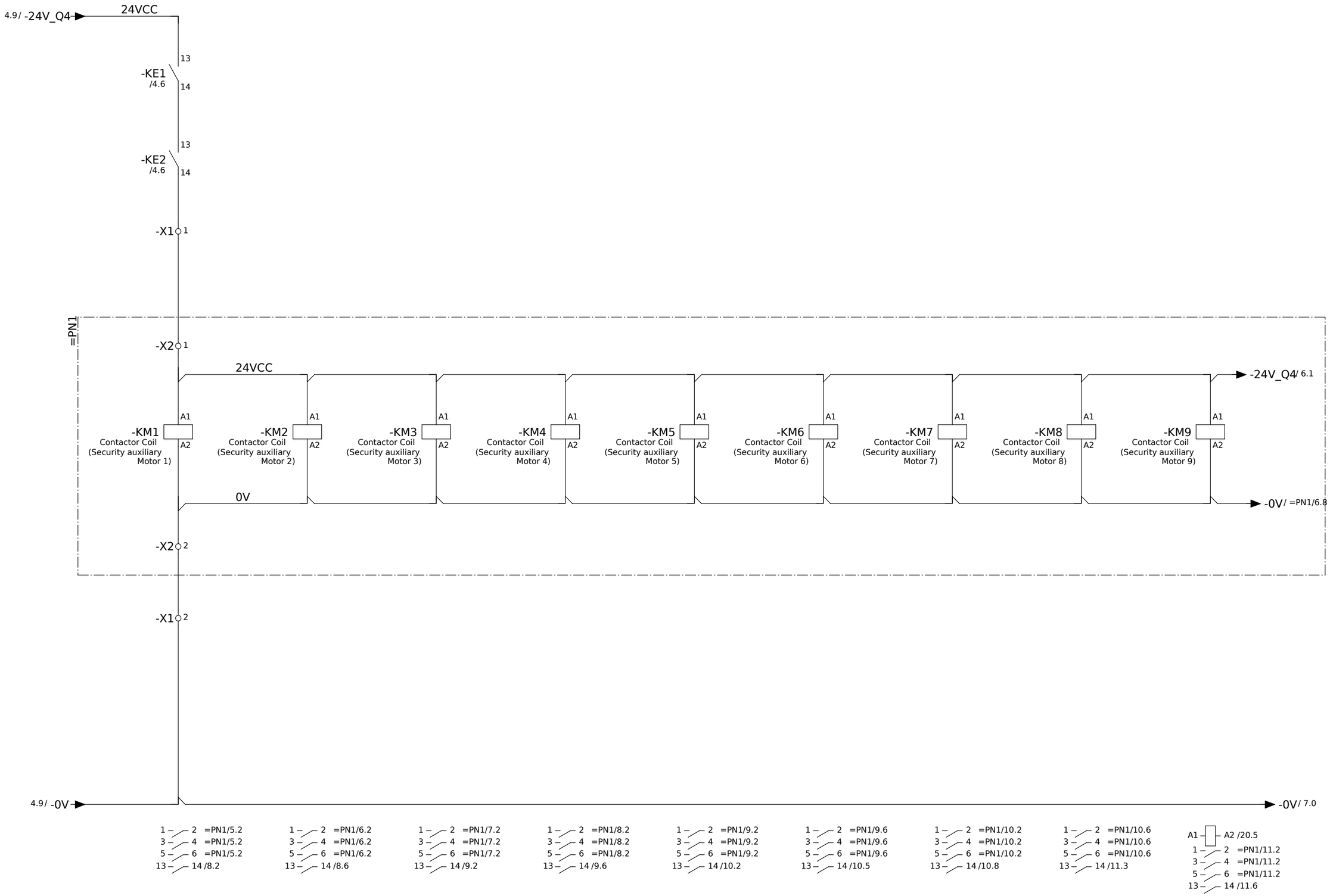

5 5

			Date	8/6/2015				= PN2
			Editor.	USER				+
			Verif		ELECTRICAL PROJECT SIMULATOR			Page 18
Change	Date	Name	Orig		In place of	Replaced by	www.delorenzoglobal.com	Pages 40

DE LORENZO
Engineering Training Solutions

SECURITY AUXILIARIES 1

De Lorenzo - Engineering Training Solutions

=PN1

5.8/ -24V_Q4

-KM10 Contactor Coil (Security auxiliary Motor 10)
A1
A2

-KM11 Contactor Coil (Security auxiliary Motor 11)
A1
A2

-KM12 Contactor Coil (Security auxiliary Motor 12)
A1
A2

/ -0V

A1 — A2 /20.6
1 — 2 =PN1/11.6
3 — 4 =PN1/11.6
5 — 6 =PN1/11.6
13 — 14 /12.1

1 — 2 =PN1/12.2
3 — 4 =PN1/12.2
5 — 6 =PN1/12.2
13 — 14 /12.4

1 — 2 =PN1/12.6
3 — 4 =PN1/12.7
5 — 6 =PN1/12.7
13 — 14 /12.8

6

6

			Date	20/5/2015		SECURITY AUXILIARIES 2	De Lorenzo - Engineering Training Solutions	= PN2
			Editor.	USER				+
			Verif		ELECTRICAL PROJECT SIMULATOR		www.delorenzoglobal.com	Page 19
Change	Date	Name	Orig		In place of / Replaced by			Pages 40

DE LORENZO Engineering Training Solutions

3.9/ -24V_Q3 → 24VCC

5.8/ -0V → 0VCC → -0V/ 8.0

3.9/ -PE → PE

I/OS INTEGRATED TO THE CPU

-A0 1769L18ERBB1B COMPACTLOGIX L18ER	-A1.1 1734-IB8 8 POINTS DIGITAL INPUT 24VCC	-A1.2 1734-IB8 8 POINTS DIGITAL INPUT 24VCC	-A1.3 1734-IB8 8 POINTS DIGITAL INPUT 24VCC	-A1.4 1734-IB8 8 POINTS DIGITAL INPUT 24VCC	-A1.5 1734-IB8 8 POINTS DIGITAL INPUT 24VCC	-A1.6 1734-IB8 8 POINTS DIGITAL INPUT 24VCC	-A1.7 1734-IB8 8 POINTS DIGITAL INPUT 24VCC	-A1.8 1734-IB8 8 POINTS DIGITAL INPUT 24VCC	-A1.9 1734-IB8 8 POINTS DIGITAL INPUT 24VCC	-A1.10 1734-IB8 8 POINTS DIGITAL INPUT 24VCC	-A1.11 1734-IB8 8 POINTS DIGITAL INPUT 24VCC	-A2.1 1734-IE4C 8 POINTS DIGITAL OUTPUT 24VCC	-A2.2 1734-OB8 8 POINTS TRANSISTOR DIGITAL OUTPUT	-A2.3 1734-OB8 8 POINTS TRANSISTOR DIGITAL OUTPUT	-A2.4 1734-OB8 8 POINTS TRANSISTOR DIGITAL OUTPUT	-A2.5 1734-OB8 8 POINTS TRANSISTOR DIGITAL OUTPUT	-A3.1 1734-IE4C 4 POINTS ANALOG INPUT (4-20mA)	-A3.2 1734-IE4C 4 POINTS ANALOG INPUT (4-20mA)	-A4.1 1734-IE4C 4 POINTS ANALOG INPUT (4-20mA)
24V(+) 0V(-) PE	1	1	2	2	3	3	4	4	5	5	6	7	7	8	8	9	10	11	12
ETHERNET ETHERNET	/8.1	/9.1	/10.1	/11.1	/12.1	/13.1	/14.1	/15.1	/16.1	/17.1	/18.1	/19.1	/20.1	/21.1	/22.1	/23.1	/24.1	/25.1	/26.1

			Date	26/6/2015	ELECTRICAL PROJECT SIMULATOR		PLC POWER-SUPPLY	De Lorenzo - Engineering Training Solutions
			Editor.	USER				= PN2
			Verif					+
Change	Date	Name	Orig		In place of	Replaced by		www.delorenzoglobal.com

DE LORENZO Engineering Training Solutions

7.9/ -0V → 0VCC

3.9/ -24V_Q5 → 24VCC

-0V / 9.0

-24V_Q5 / 9.0

-XA1.1_24V 0 — 1A

-XA1.1_M 0

1A 1 — 1

1A 2 — 2

1A 3 — 3

1A 4 — 4

1A 5 — 5

1A 6 — 6

1A 7 — 7

=PN1

-XCM1 3

-QM1
=PN1/5.2
Circuit Breaker
Motor 1 Protection
13 / 14

-KM1
/5.1
Contactor Warning
(Security Aux. Motor 1)
13 / 14

-U1
=PN1/5.1
FREQUENCY INVERTER
ACS355 - ABB
19 – Inverter ON Warning
21 – Inverter failure warning
R0NO 19
D0OUT 21

-XCM2 3

-QM2
=PN1/6.2
Circuit Breaker
Motor 2 Protection
13 / 14

-KM2
/5.2
Contactor Warning
(Security Aux. Motor 2)
13 / 14

-U2
=PN1/6.1
FREQUENCY INVERTER
ACS355 - ABB
19 – Inverter ON Warning
21 – Inverter failure warning
R0NO 19
D0OUT 21

-XCM1 4 | 5 | 5 | 7

-XCM2 4 | 5 | 6 | 7

-XA1.1 0 | 1 | 2 | 3 | 4 | 5 | 6 | 7

-A1.1
/7.2

0	I0.0	SCREW CONVEYOR POWER-SUPPLY
1	I0.1	SCREW CONVEYOR SECURITY
2	I0.2	SCREW CONVEYOR ON
3	I0.3	SCREW CONVEYOR FAILURE
4	I0.4	MIXER POWER-SUPPLY
5	I0.5	MIXER SECURITY
6	I0.6	MIXER ON
7	I0.7	MIXER FAILURE

			Date	20/5/2015	ELECTRICAL PROJECT SIMULATOR		DIGITAL INPUTS	De Lorenzo - Engineering Training Solutions
			Editor.	USER				= PN2
			Verif					+
Change	Date	Name	Orig		In place of	Replaced by		www.delorenzoglobal.com

DE LORENZO — Engineering Training Solutions

Page 21 / Pages 40

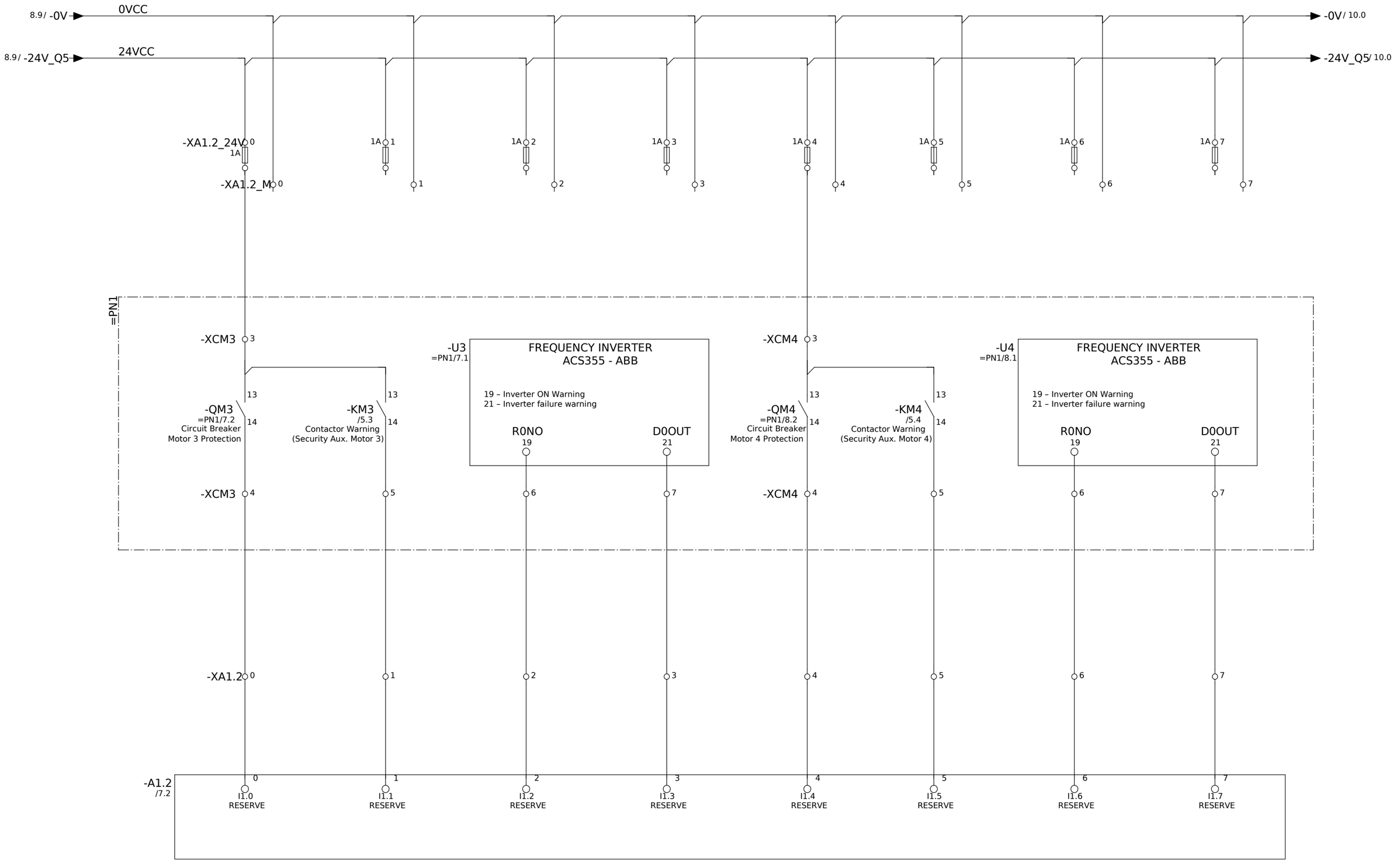

			Date	20/5/2015	ELECTRICAL PROJECT SIMULATOR		DIGITAL INPUTS	De Lorenzo - Engineering Training Solutions
			Editor.	USER				= PN2
			Verif					+
Change	Date	Name	Orig		In place of	Replaced by		www.delorenzoglobal.com

DE LORENZO
Engineering Training Solutions

Page 22
Pages 40

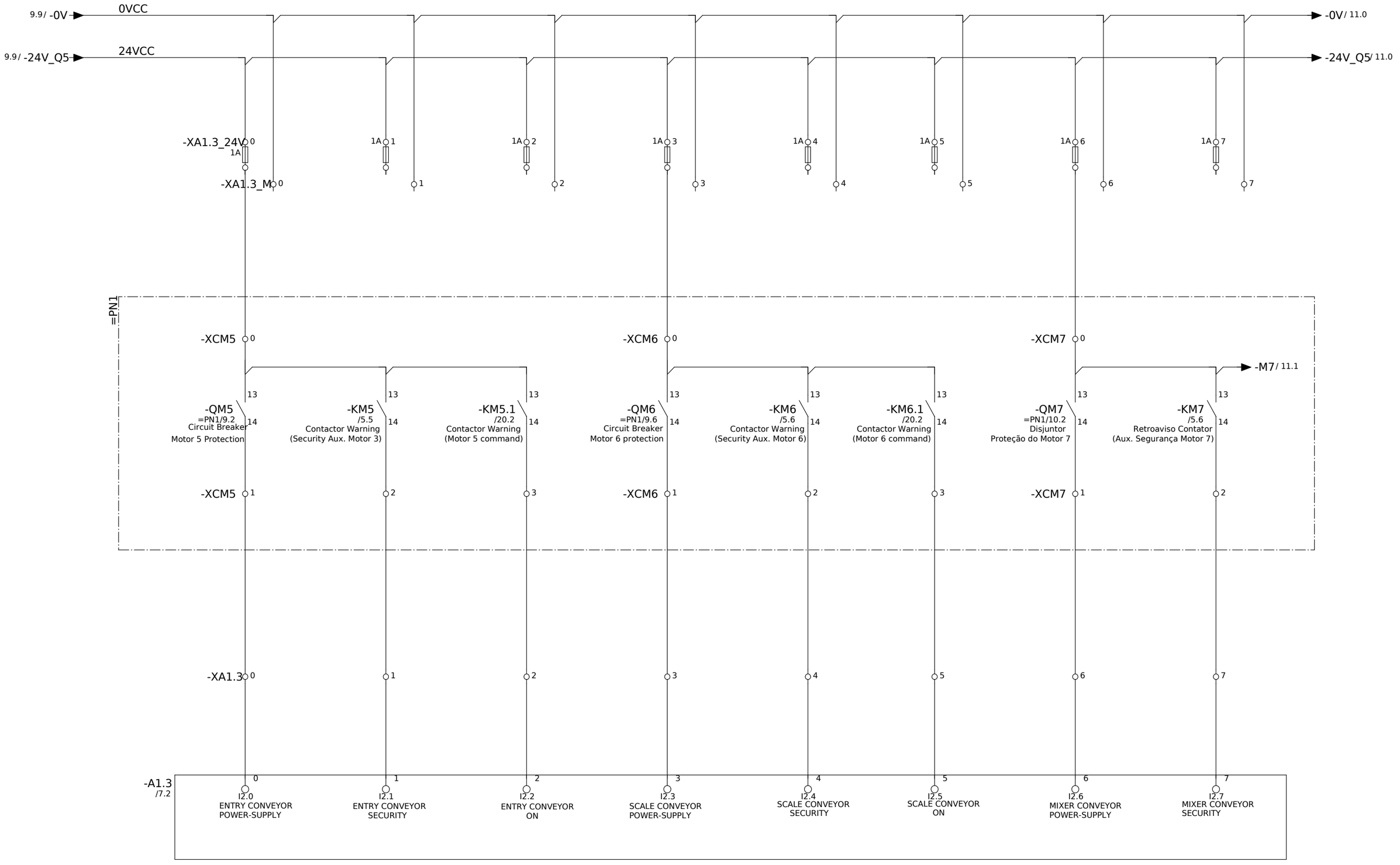

			Date	17/6/2015	ELECTRICAL PROJECT SIMULATOR		DIGITAL INPUTS	De Lorenzo - Engineering Training Solutions
			Editor.	USER				= PN2
			Verif					+
Change	Date	Name	Orig		In place of	Replaced by		www.delorenzoglobal.com

DE LORENZO
Engineering Training Solutions

Page 23
Pages 40

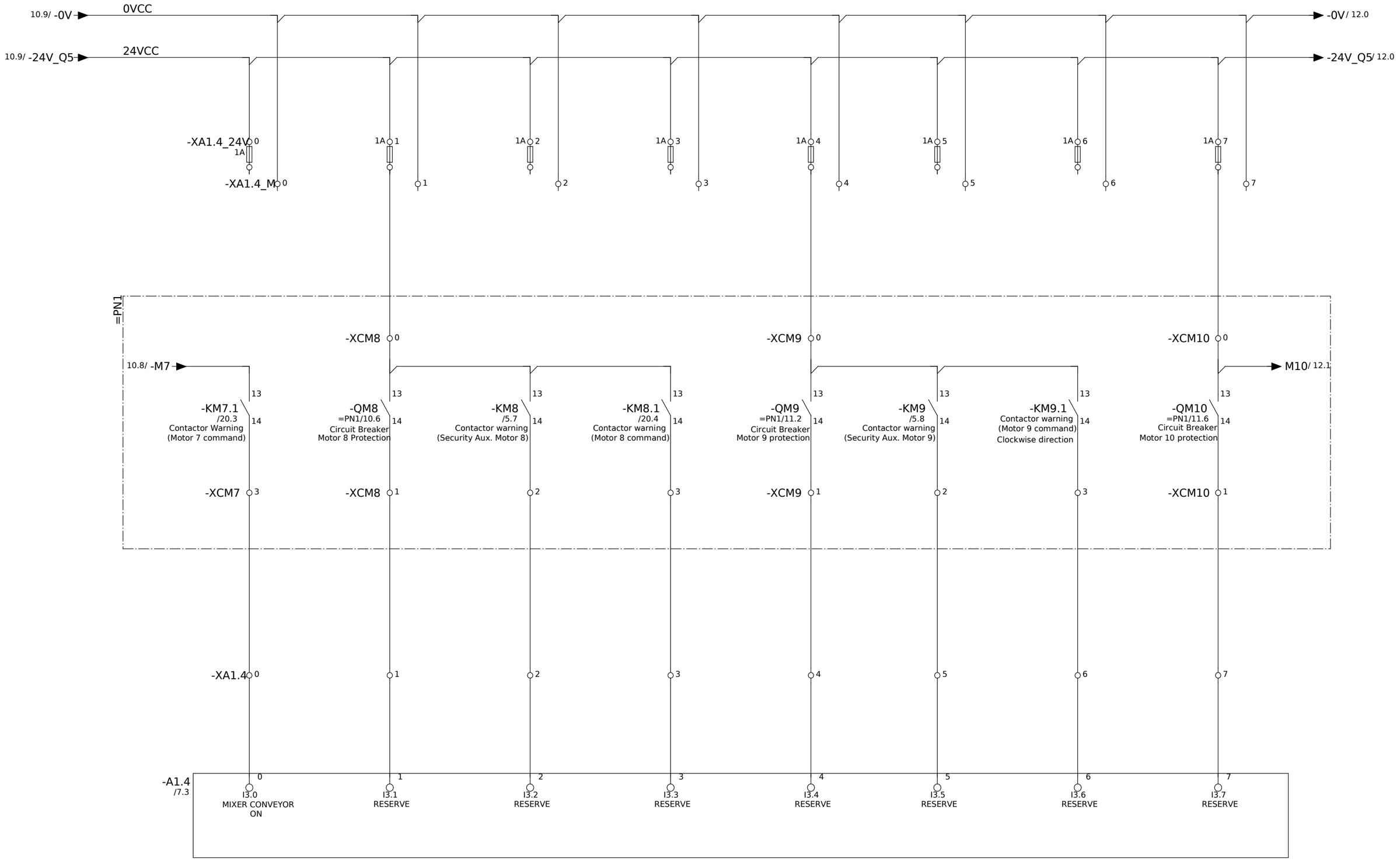

			Date	20/5/2015	ELECTRICAL PROJECT SIMULATOR		DIGITAL INPUTS	De Lorenzo - Engineering Training Solutions
			Editor.	USER				= PN2
			Verif					+
Change	Date	Name	Orig		In place of	Reaplced by		www.delorenzoglobal.com

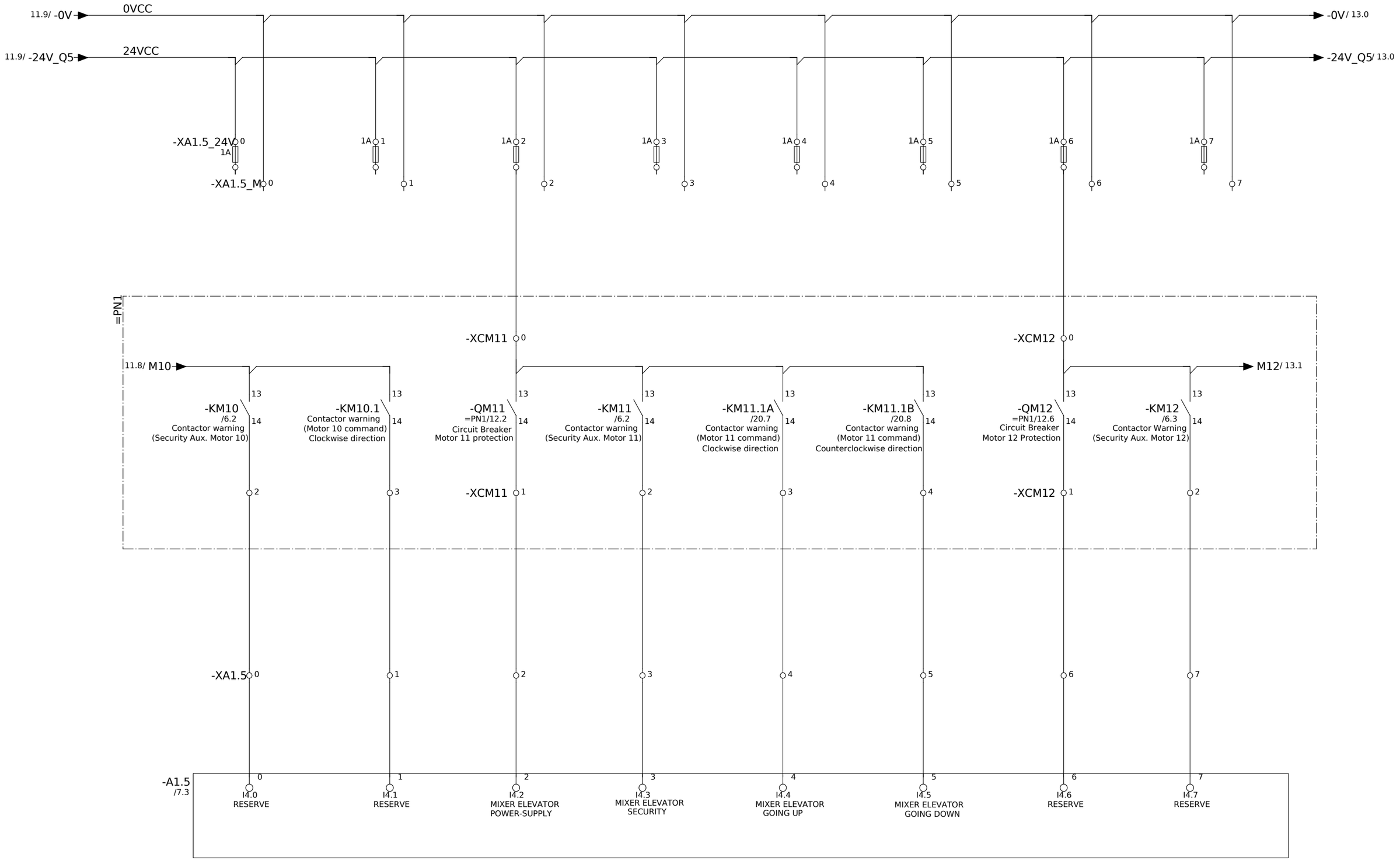

			Date	20/5/2015	ELECTRICAL PROJECT SIMULATOR	DE LORENZO Engineering Training Solutions	DIGITAL INPUTS	De Lorenzo - Engineering Training Solutions / www.delorenzoglobal.com
			Editor.	USER				= PN2 / +
			Verif					Page 25 / Pages 40
Change	Date	Name	Orig		In place of	Replaced by		

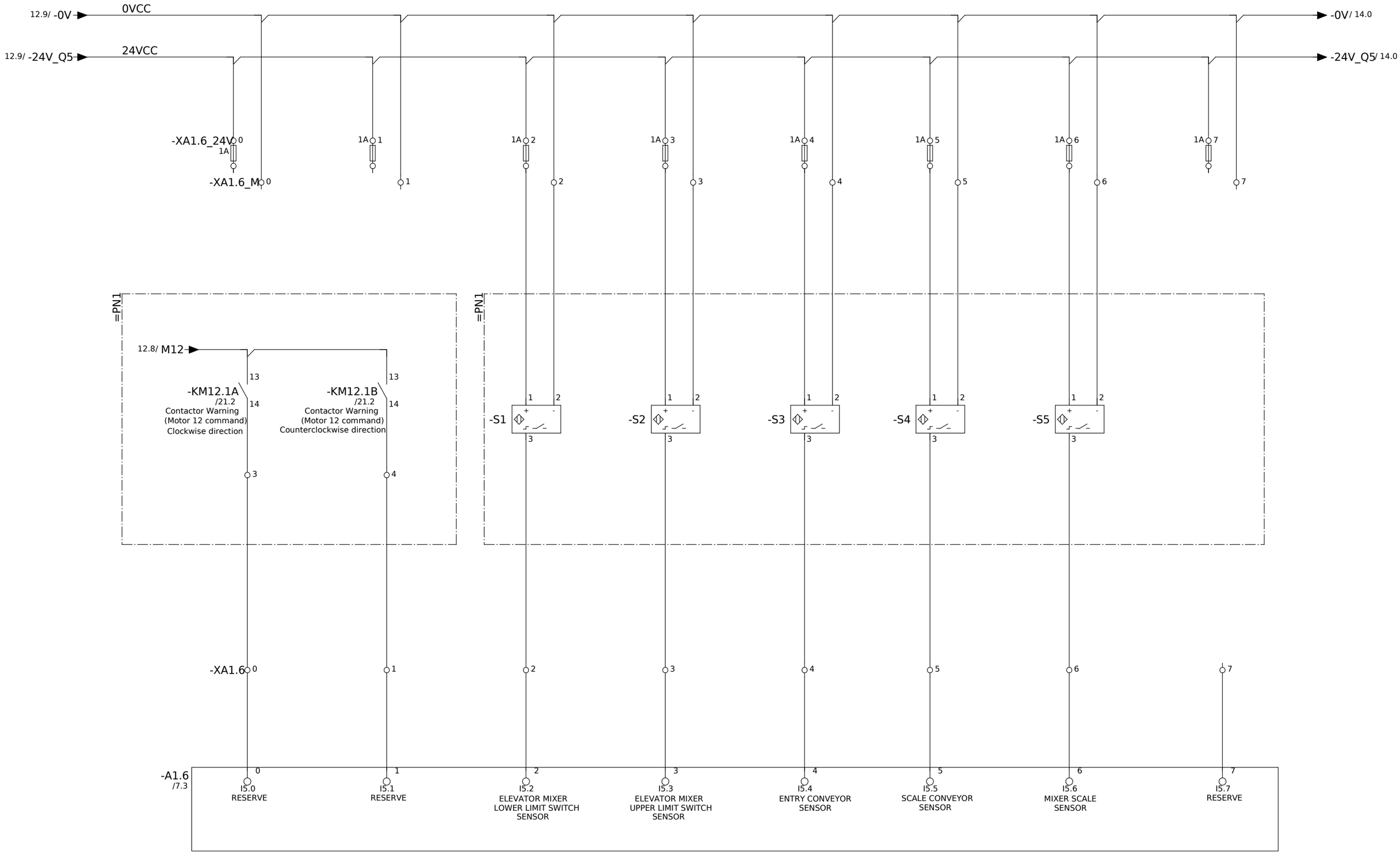

			Date	20/5/2015	ELECTRICAL PROJECT SIMULATOR		DIGITAL INPUT	De Lorenzo - Engineering Training Solutions	= PN2
			Editor.	USER					+
			Verif					www.delorenzoglobal.com	Page 26
Change	Date	Name	Orig		In place of	Replaced by			Pages 40

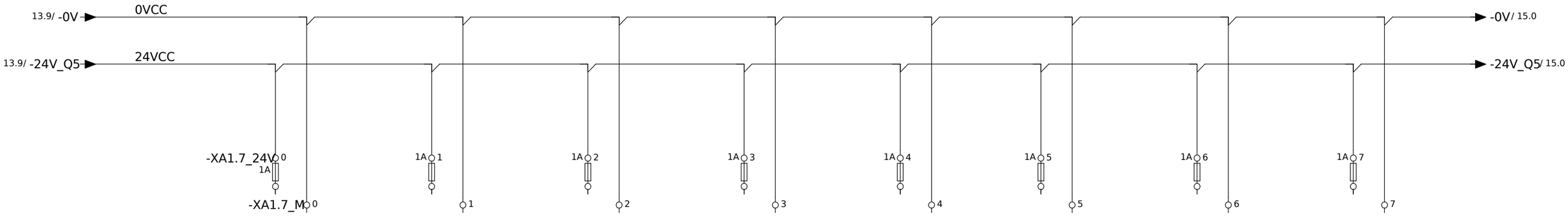

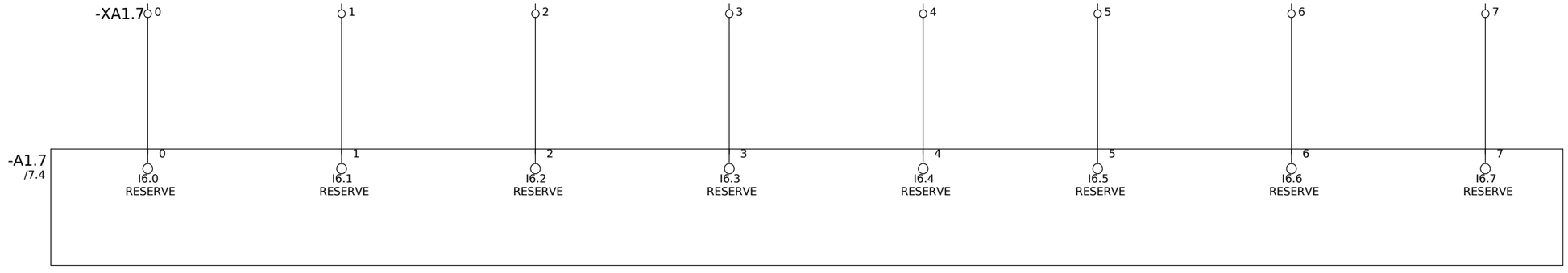

			Date	20/5/2015	ELECTRICAL PROJECT SIMULATOR	DE LORENZO Engineering Training Solutions	DIGITAL INPUTS	De Lorenzo - Engineering Training Solutions
			Editor.	USER				= PN2
			Verif					+
Change	Date	Name	Orig		In place of	Replaced by		www.delorenzoglobal.com

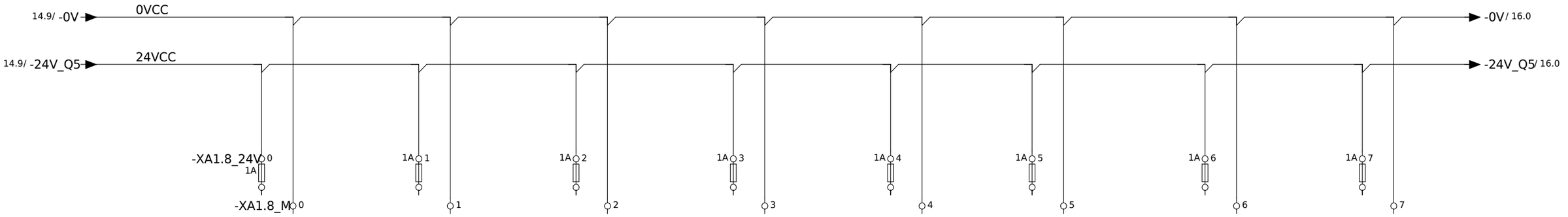

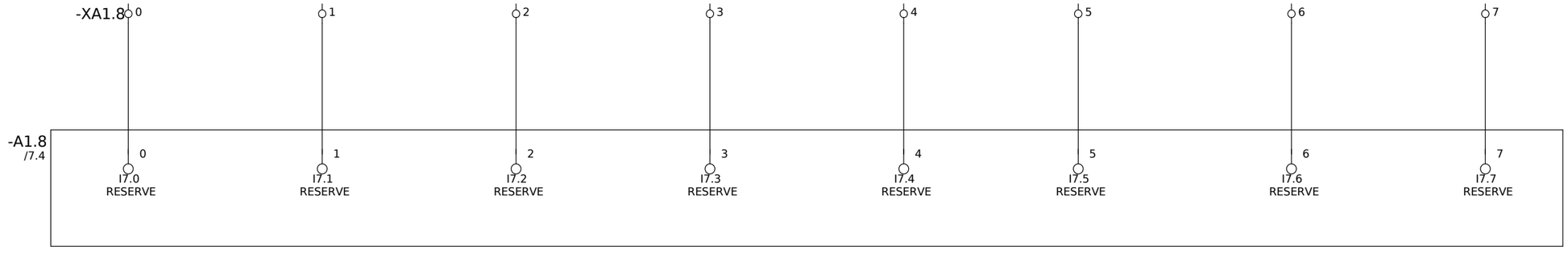

			Date	26/6/2015	ELECTRICAL PROJECT SIMULATOR	DE LORENZO Engineering Training Solutions	DIGITAL INPUTS	De Lorenzo - Engineering Training Solutions
			Editor.	USER				= PN2
			Verif					+
Change	Date	Name	Orig		In place of	Replaced by		www.delorenzoglobal.com

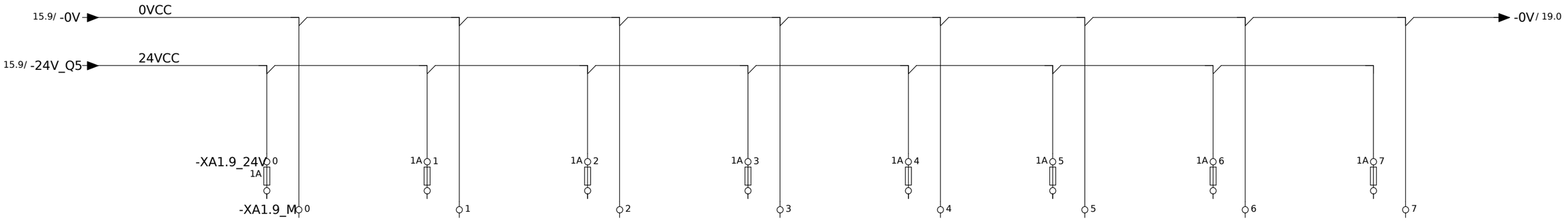

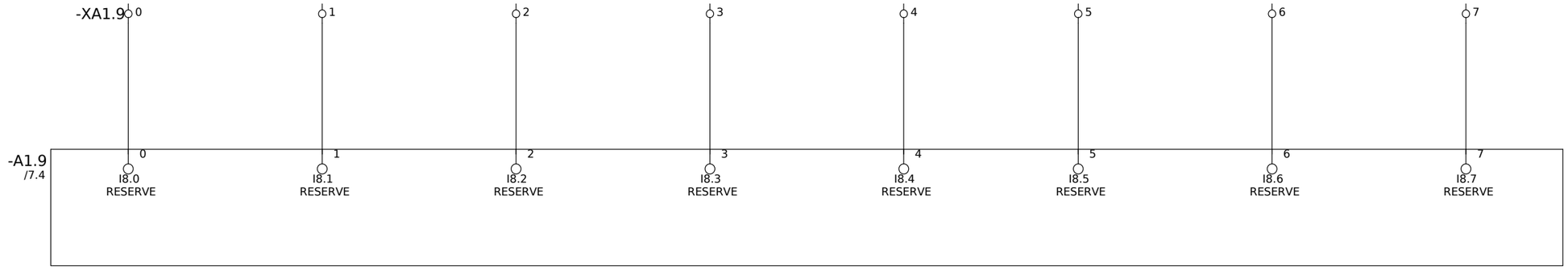

			Date	26/6/2015	ELECTRICAL PROJECT SIMULATOR	DE LORENZO Engineering Training Solutions	DIGITAL INPUTS	De Lorenzo - Engineering Training Solutions
			Editor.	USER				= PN2
			Verif					+
Change	Date	Name	Orig		In place of	Replaced by		www.delorenzoglobal.com

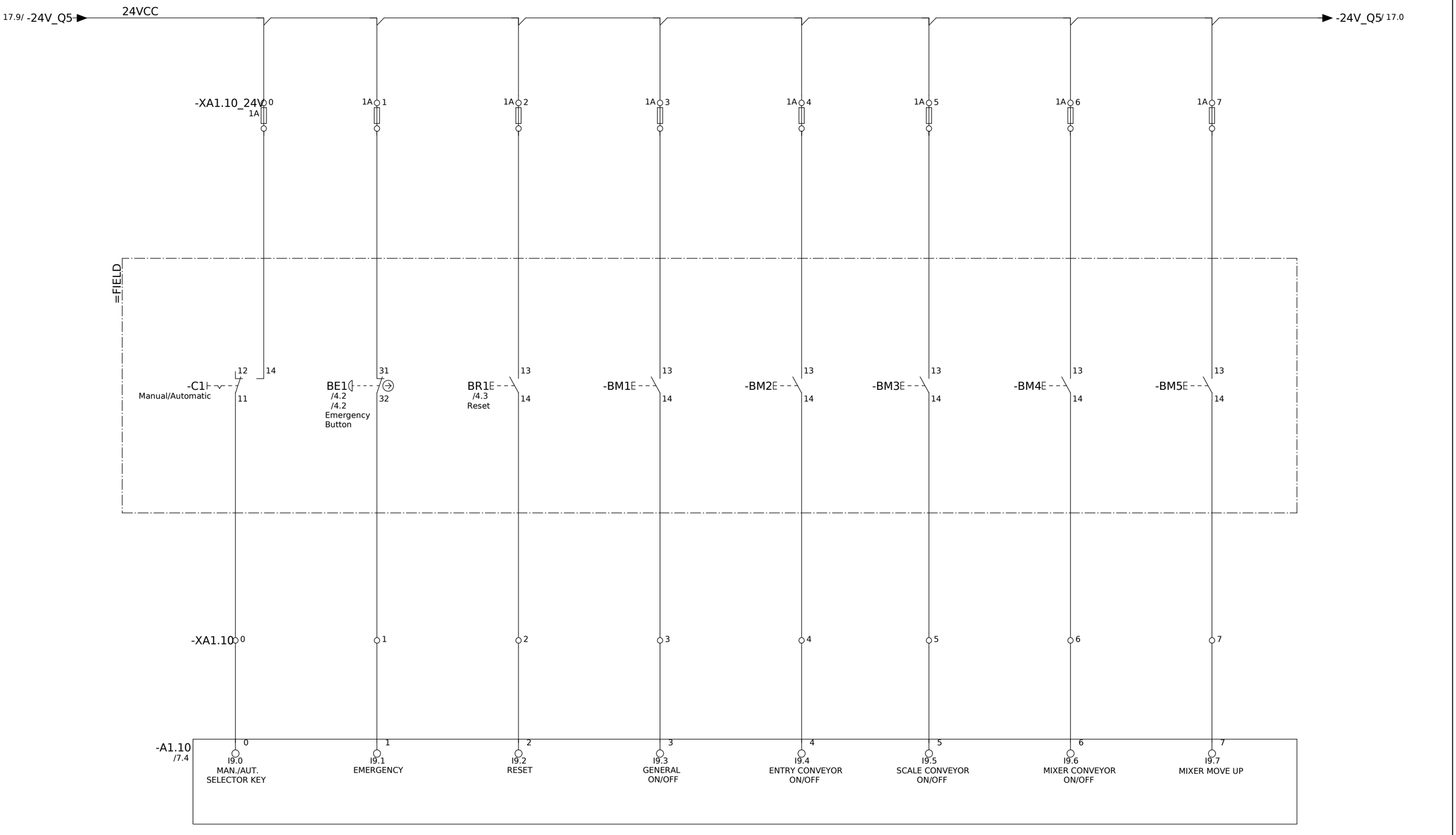

			Date	26/6/2015	ELECTRICAL PROJECT SIMULATOR		DIGITAL INPUTS	De Lorenzo - Engineering Training Solutions
			Editor.	USER				= PN2
			Verif					+
Change	Date	Name	Orig		In place of	Replaced by		www.delorenzoglobal.com

DE LORENZO
Engineering Training Solutions

Page 30
Pages 40

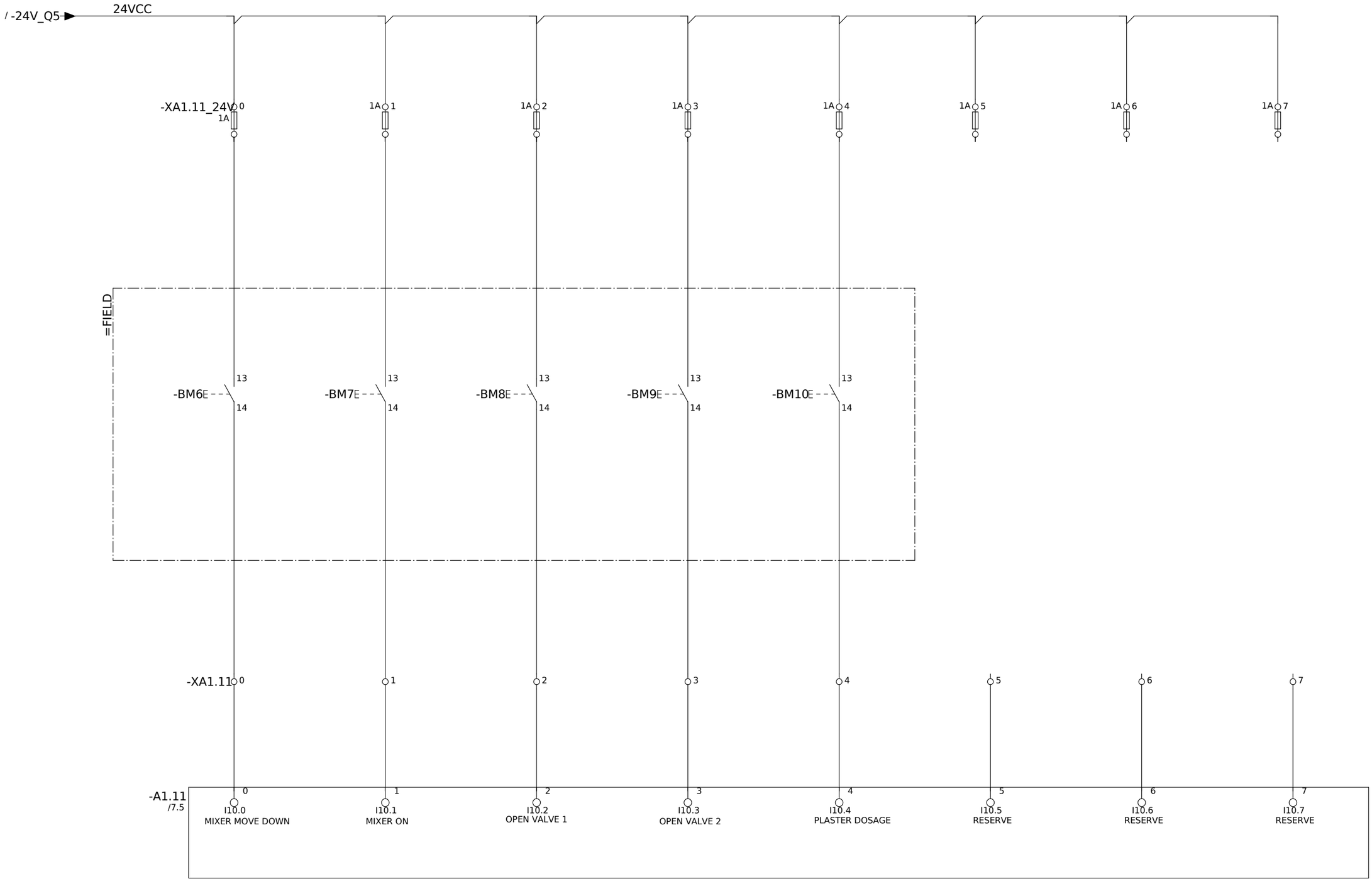

			Date	26/6/2015	ELECTRICAL PROJECT SIMULATOR		DIGITAL INPUTS	De Lorenzo - Engineering Training Solutions
			Editor.	USER				= PN2
			Verif					+
Change	Date	Name	Orig		In place of	Replaced by		www.delorenzoglobal.com

DE LORENZO
Engineering Training Solutions

Page 31
Pages 40

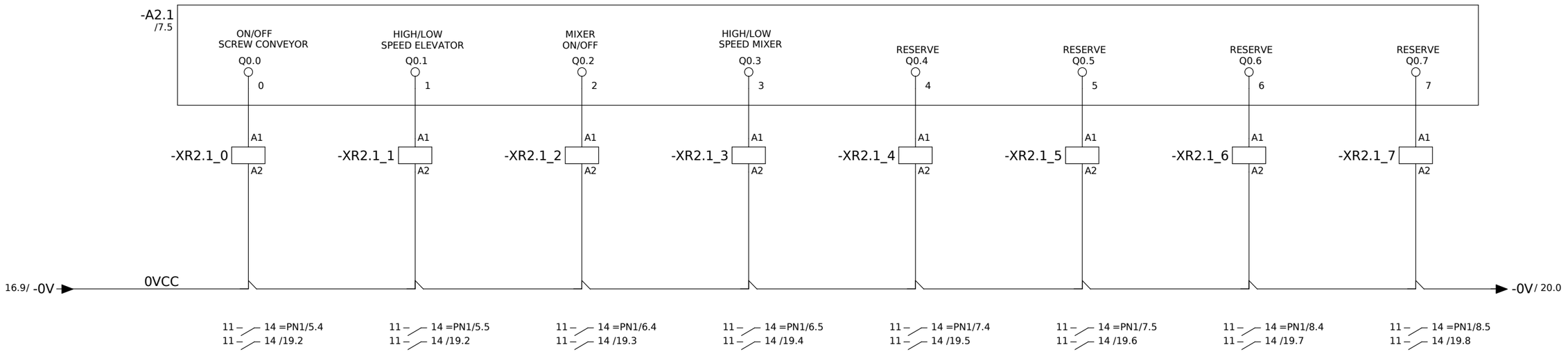

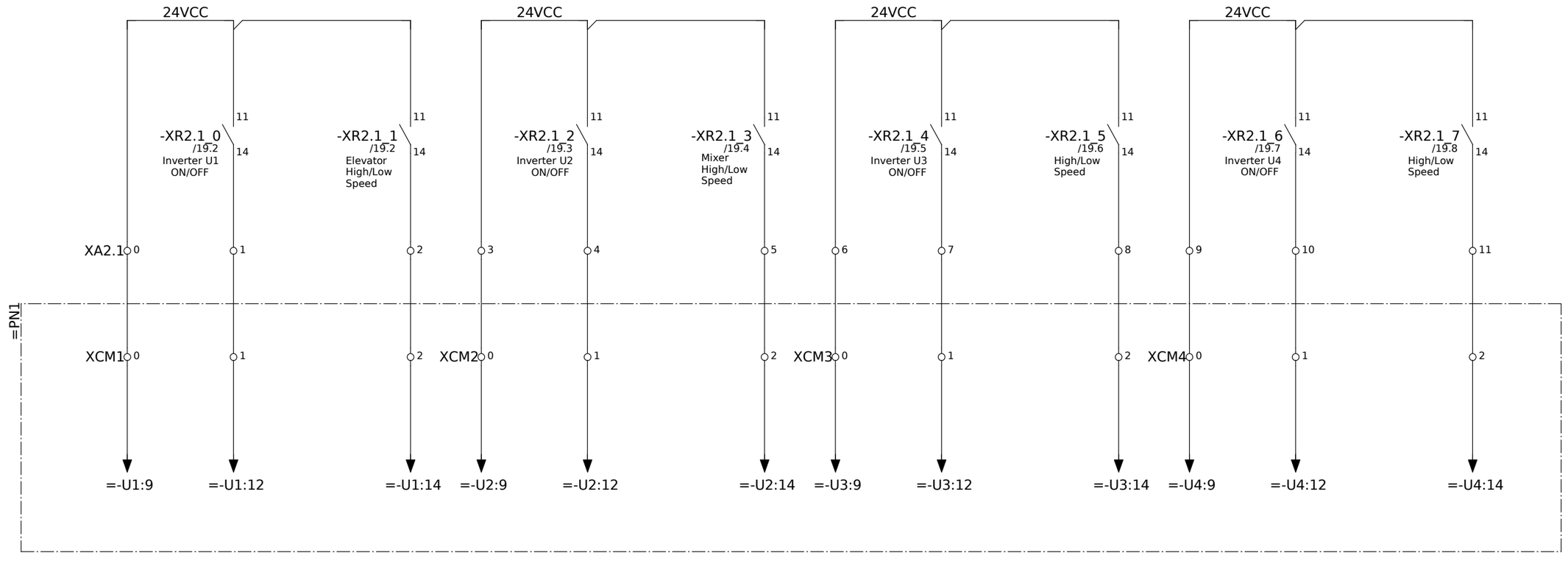

			Date	20/5/2015	ELECTRICAL PROJECT SIMULATOR		DIGITAL OUTPUTS	De Lorenzo - Engineering Training Solutions
			Editor.	USER				= PN2
			Verif					+
Change	Date	Name	Orig		In place of	Replaced by		www.delorenzoglobal.com

DE LORENZO
Engineering Training Solutions

Page 32
Pages 40

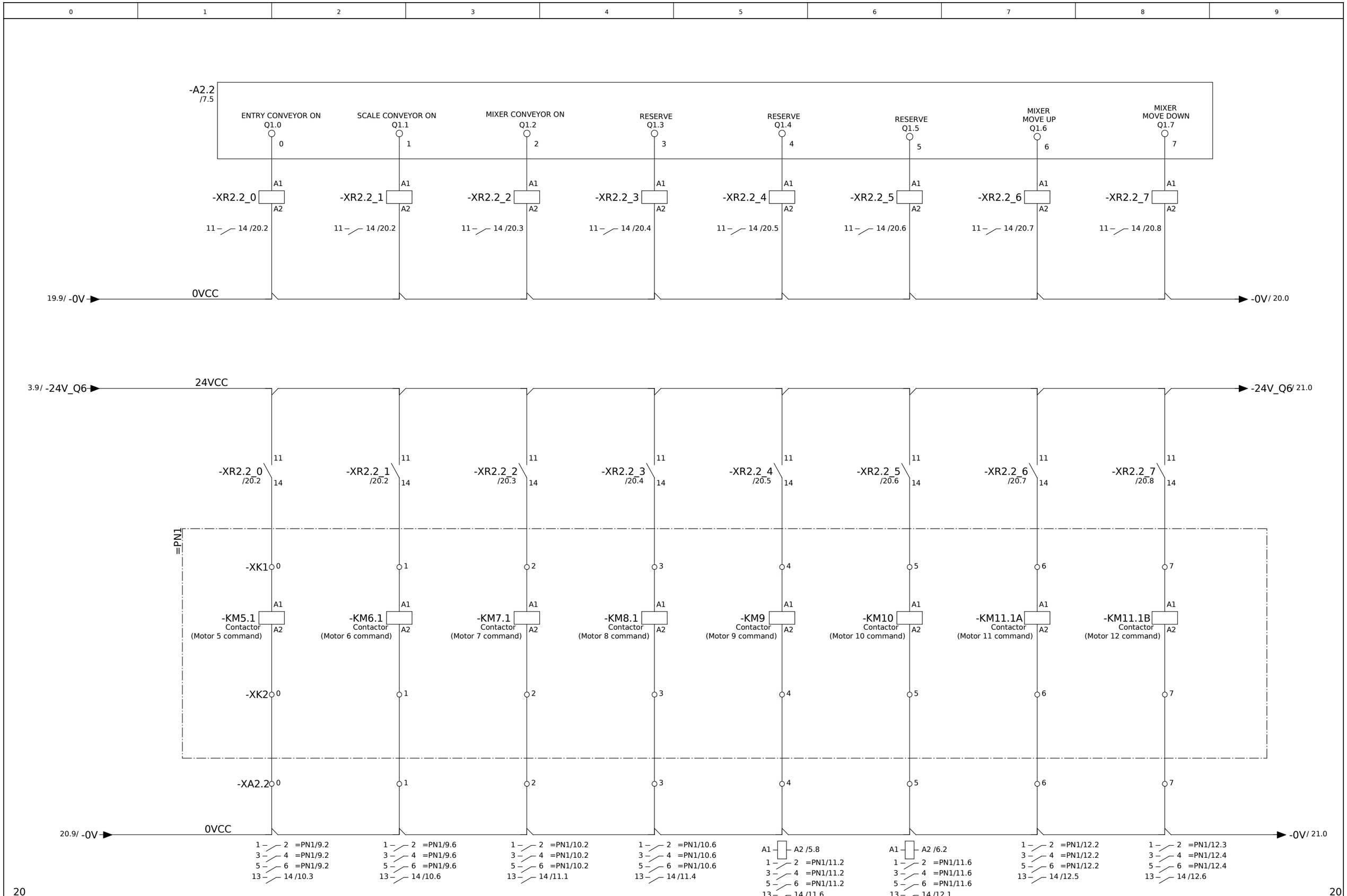

			Date	3/6/2015	ELECTRICAL PROJECT SIMULATOR	DE LORENZO Engineering Training Solutions	DIGITAL OUTPUTS	De Lorenzo - Engineering Training Solutions	= PN2
			Editor.	USER					+
			Verif					www.delorenzoglobal.com	Page 33
Change	Date	Name	Orig		In place of	Replaced by			Pages 40

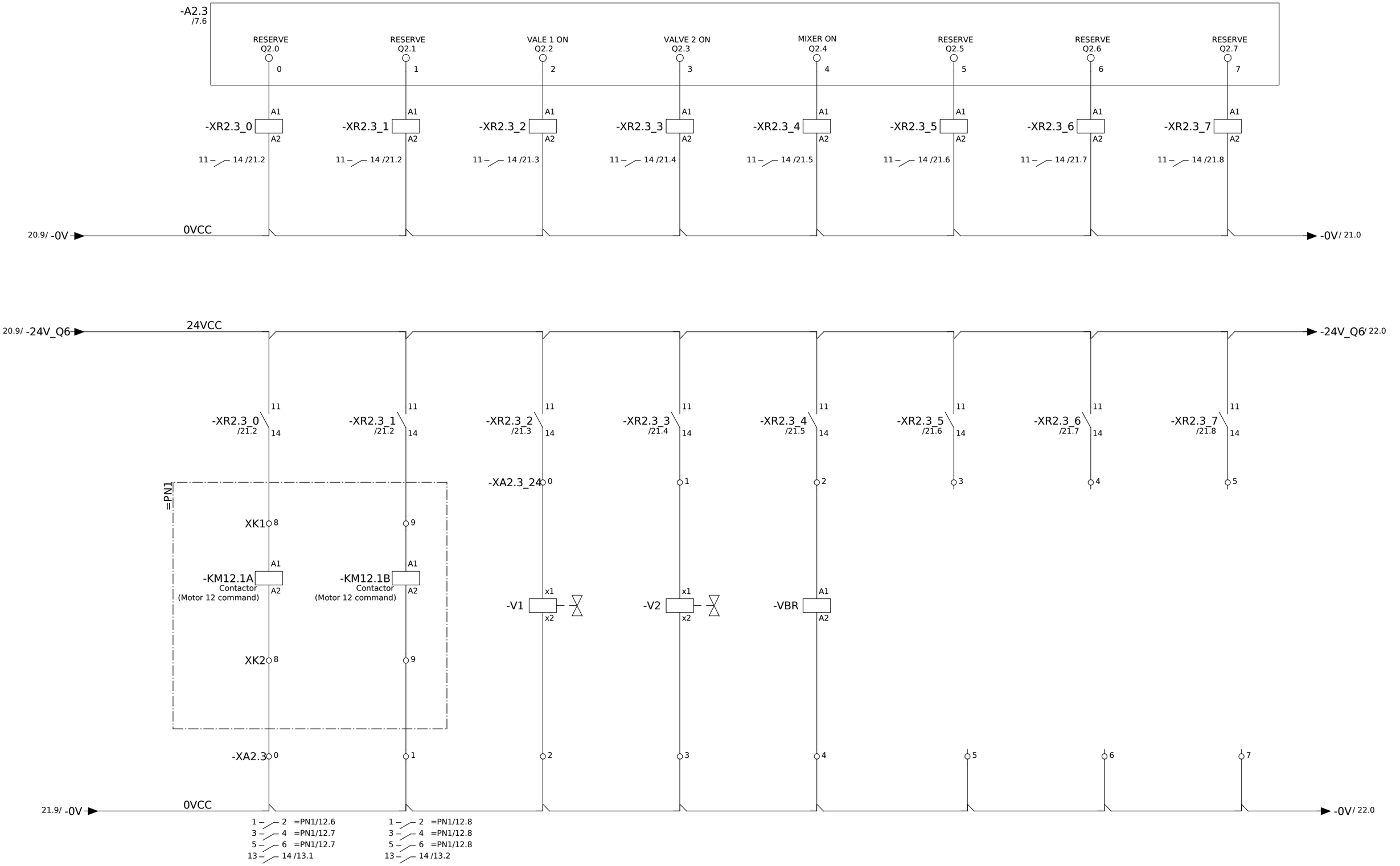

			Date	17/6/2015	ELECTRICAL PROJECT SIMULATOR	DE LORENZO Engineering Training Solutions	DIGITAL OUTPUTS	De Lorenzo - Engineering Training Solutions
			Editor.	USER				www.delorenzoglobal.com
			Verif					
Change	Date	Name	Orig		In place of / Replaced by			

= PN2
+
Page 34
Pages 40

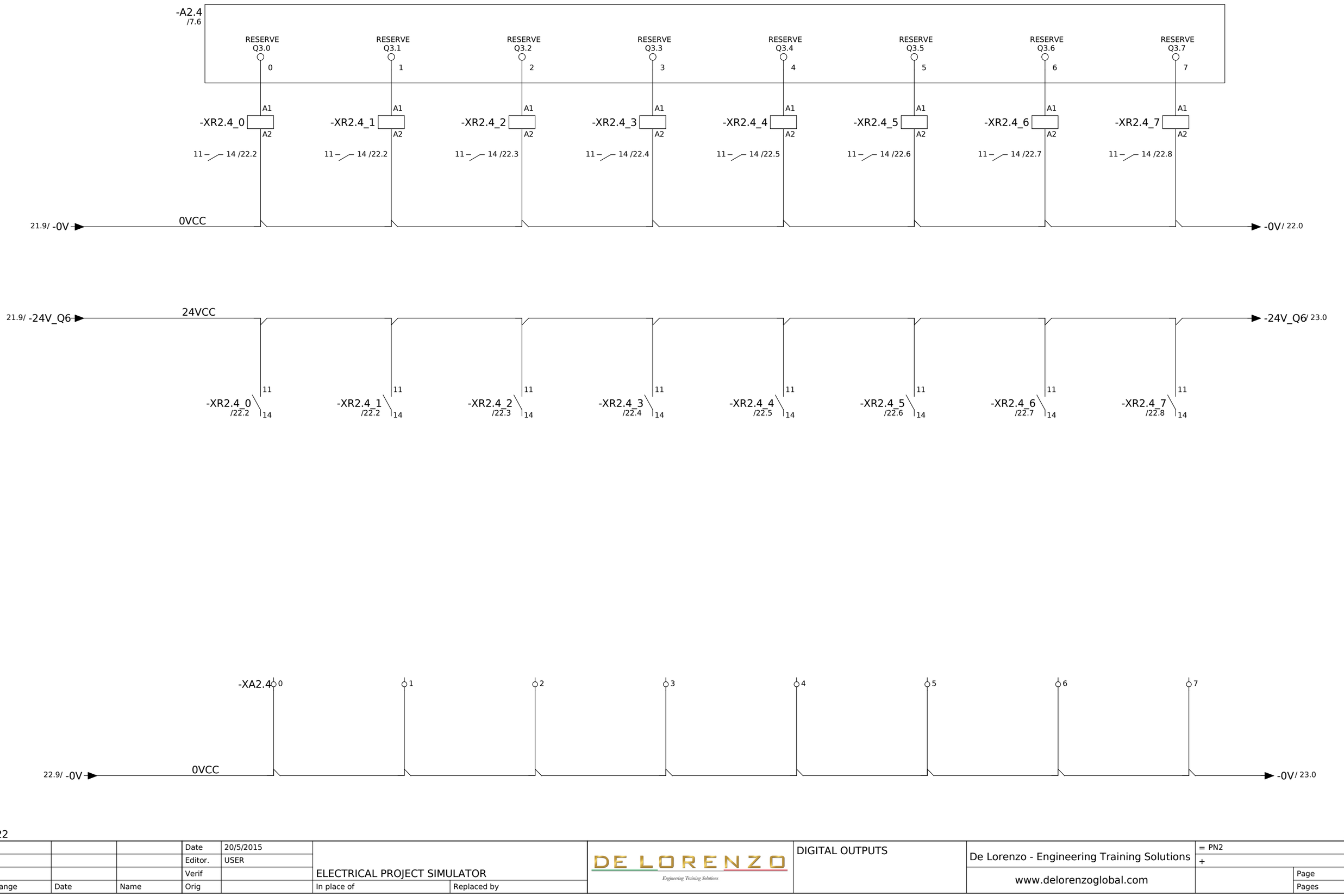

			Date	20/5/2015		DIGITAL OUTPUTS	De Lorenzo - Engineering Training Solutions	= PN2	
			Editor.	USER				+	
			Verif		ELECTRICAL PROJECT SIMULATOR		www.delorenzoglobal.com	Page	35
Change	Date	Name	Orig		In place of / Replaced by			Pages	40

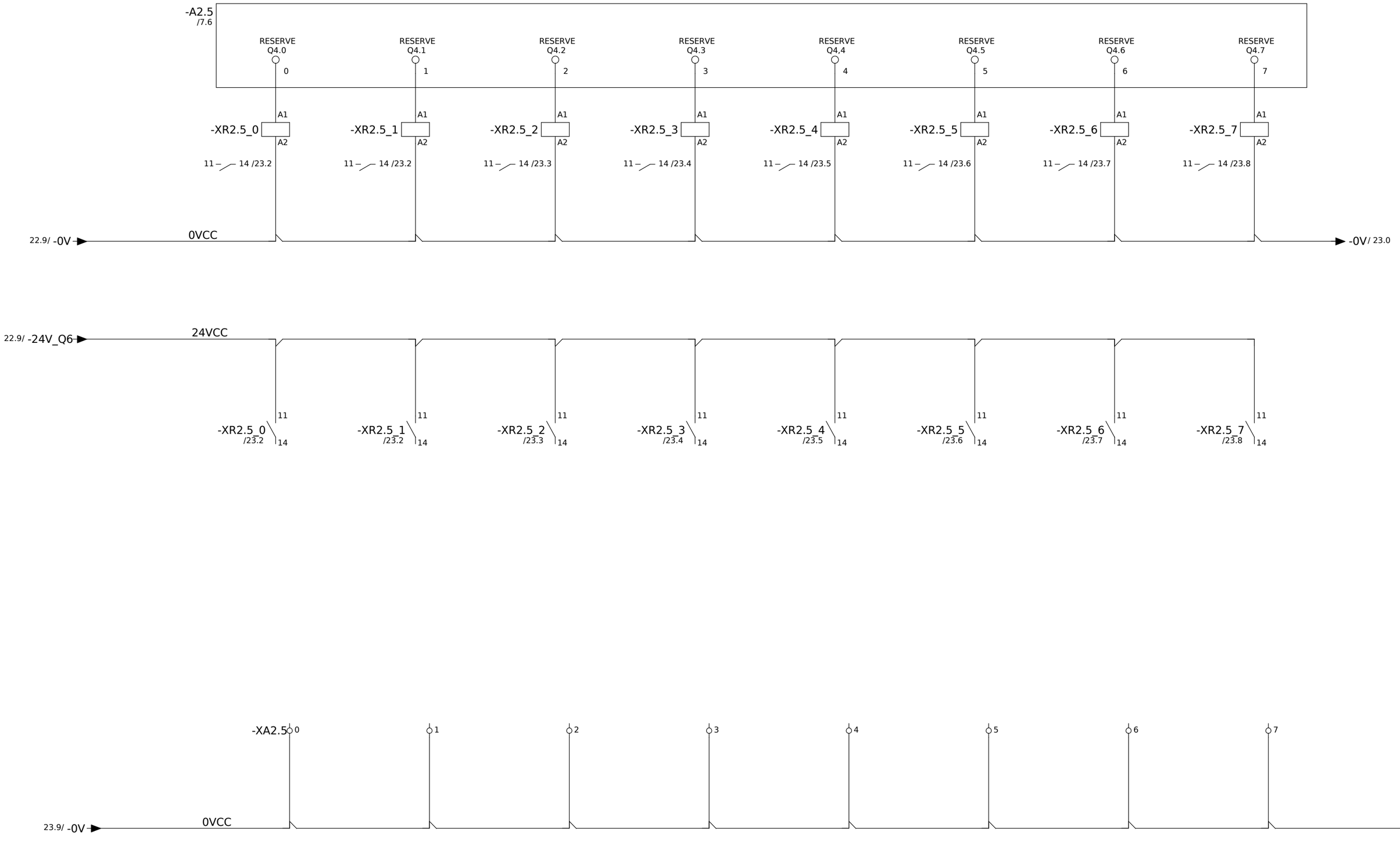

			Date	20/5/2015	ELECTRICAL PROJECT SIMULATOR		DIGITAL OUTPUTS	De Lorenzo - Engineering Training Solutions	= PN2
			Editor.	USER					+
			Verif					www.delorenzoglobal.com	Page 36
Change	Date	Name	Orig		In place of	Replaced by			Pages 40

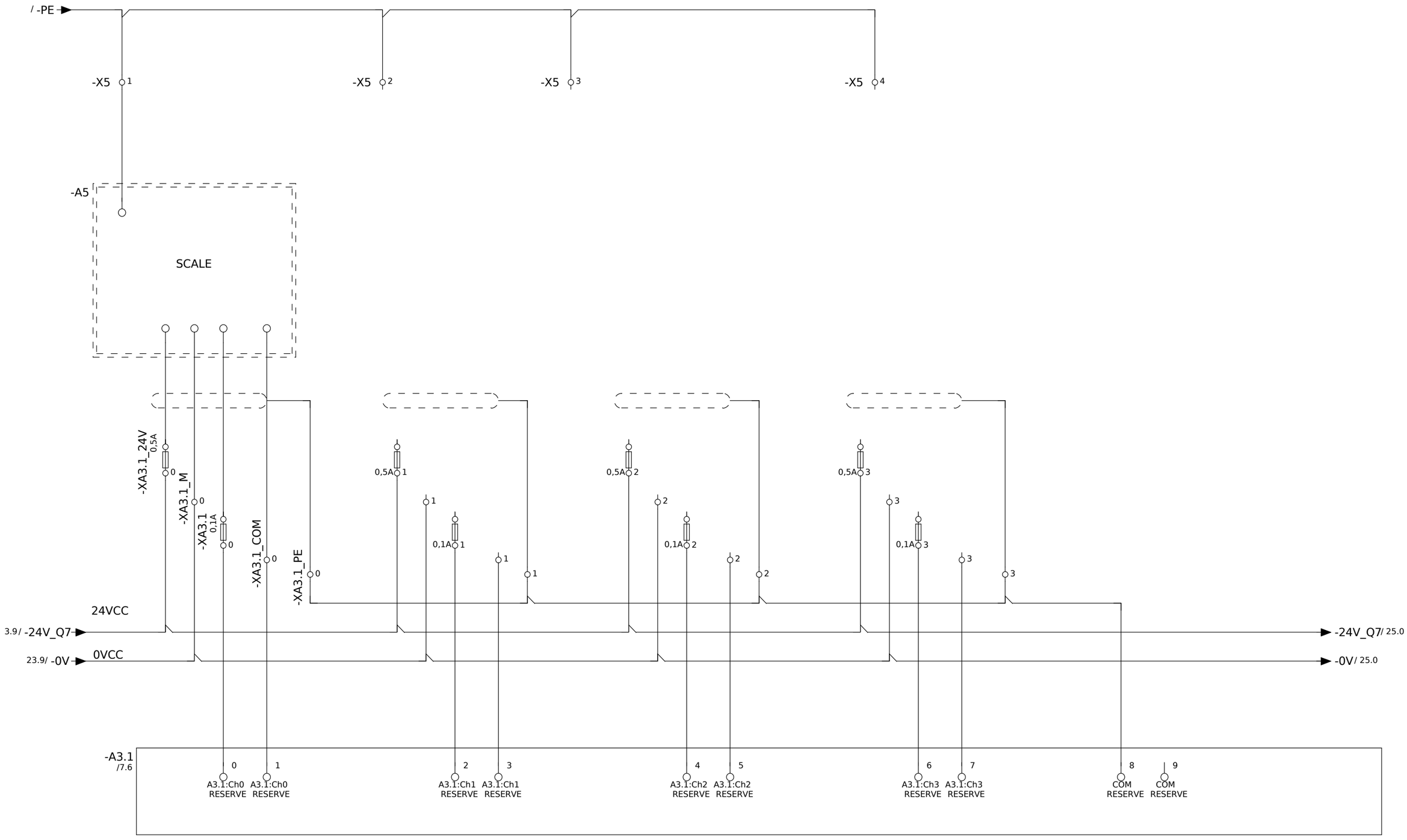

24

			Date	17/6/2015	ELECTRICAL PROJECT SIMULATOR	DE LORENZO Engineering Training Solutions	ANALOG INPUT CARD	De Lorenzo - Engineering Training Solutions
			Editor.	USER				= PN2
			Verif					+
Change	Date	Name	Orig		In place of / Replaced by			www.delorenzoglobal.com

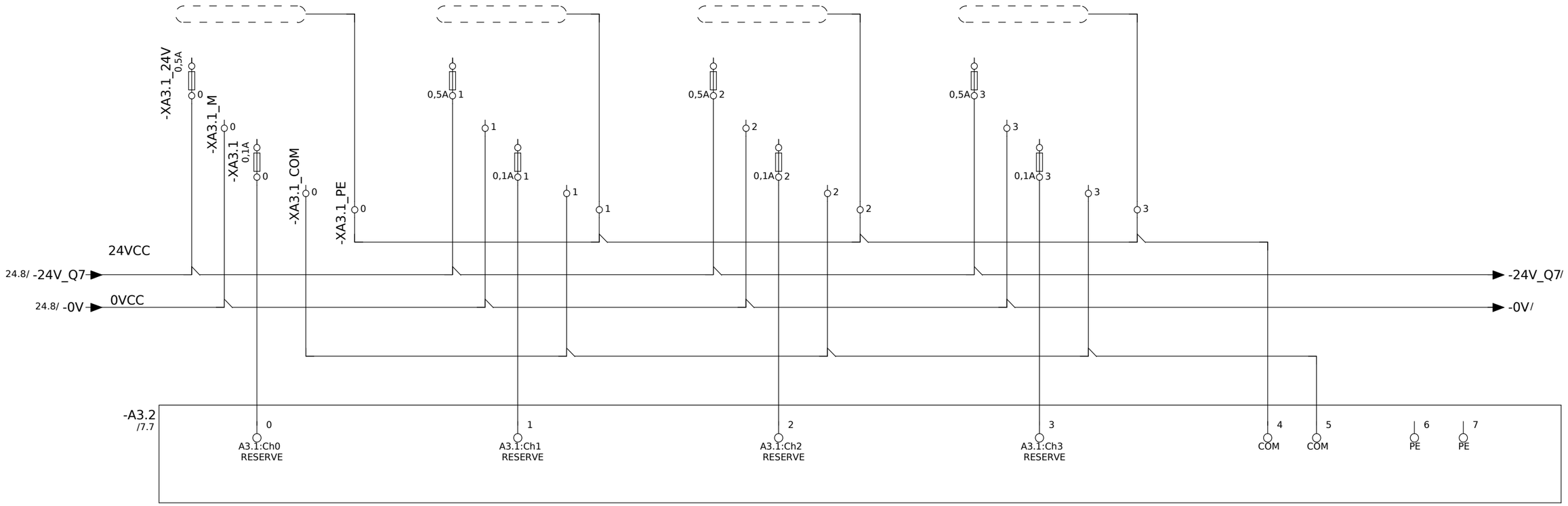

			Date	17/6/2015	ELECTRICAL PROJECT SIMULATOR	DE LORENZO Engineering Training Solutions	ANALOG INPUT CARD	De Lorenzo - Engineering Training Solutions / www.delorenzoglobal.com	= PN2 / + / Page 38 / Pages 40
			Editor.	USER					
			Verif						
Change	Date	Name	Orig		In place of	Replaced by			

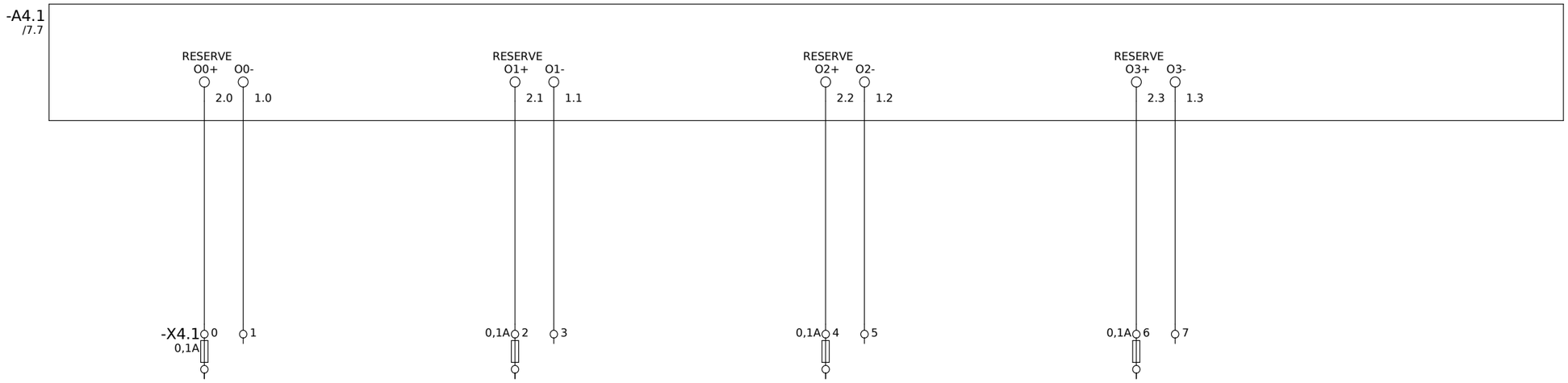

			Date	20/5/2015		ANALOG OUTPUT CARD	De Lorenzo - Engineering Training Solutions	= PN2	
			Editor.	USER				+	
			Verif		ELECTRICAL PROJECT SIMULATOR		www.delorenzoglobal.com	Page	39
Change	Date	Name	Orig		In place of / Replaced by			Pages	40

PLC UNIVERSAL PANEL

DE LORENZO

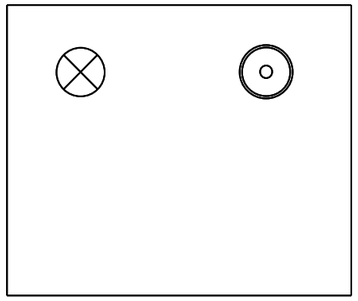

50X80

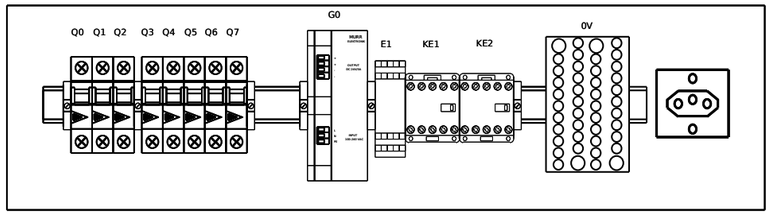

50X80

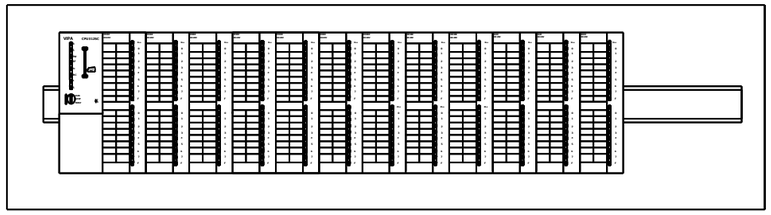

50X80

80X80

50X80

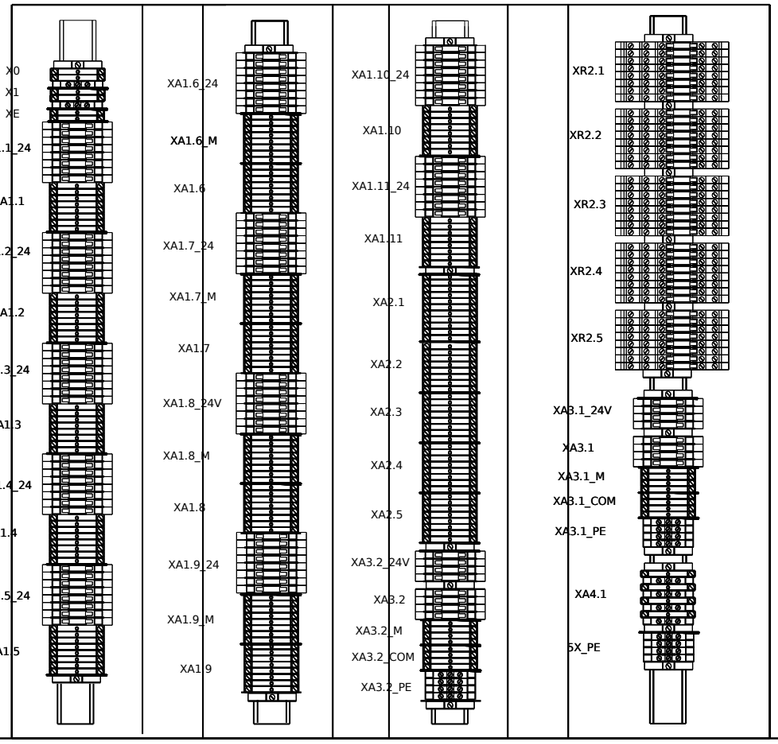

27

			Date	17/6/2015	ELECTRICAL PROJECT SIMULATOR		PLC PANEL LAYOUT	De Lorenzo - Engineering Training Solutions	= PN2
			Editor.	USER					+
			Verif					www.delorenzoglobal.com	Page 40
Change	Date	Name	Orig		In place of	Replaced by			Pages 40