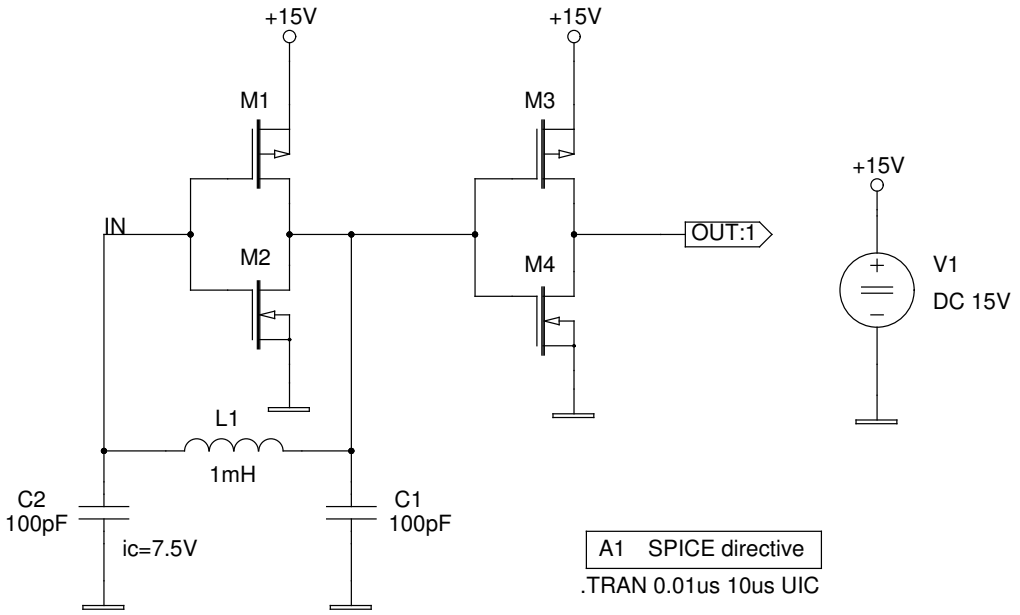

TITLE Example 1309 – Xyce
Oscillator with CMOS inverter

FILE:	REVISION: 1.00 / A
PAGE 1 OF 1	DRAWN BY: 100214 PF