MICE Target Simulation

Tom Lord, Paolo Franchini

May 11, 2018

Contents

1 Motivation **2**

2 The MICE target in the ISIS proton beam **2**

3 MARS simulation **2**

4 MAUS simulation **4**
4.1 Monte Carlo and data comparison 4

5 Luminosity monitor? **4**

6 Conclusions **5**

Abstract

Simulation of the pion production coming out from the MICE target using the MARS simulation software and implementation of this simulation into the MICE Monte Carlo software.

1 Motivation

Non trivial discrepancies in the data versus Monte Carlo comparison have justified the necessity to reconsider the pions momentum distribution used as primary input of the MICE Monte Carlo. The former model consisted in a fit done with three Gaussian of a pion distribution produced in 2008 with a earlier version of the MARS simulation software. Lack of documentation on this first study made hard to evaluate the goodness of the model that shows a peculiar hard cut in the distribution.

The MICE target has been described in its major components using the MARS simulation software.

2 The MICE target in the ISIS proton beam

The MICE target operates parasitically on protons undergoing acceleration within the ISIS synchrotron, dipping into the low-density halo of the beam on selected pulses just prior to their extraction, with an 1 Hz frequency. It is designed as a bored TiAl cylinder with inner radius 2.275 cm and outer radius 2.975 cm. The resulting thickness of material for proton collisions is significantly lower than one interaction length, giving an approximate interaction probability of x x. As a result of this,very large numbers of proton collisions are required for sufficient statistics.

The ISIS synchrotron circulates two beam bunches of approximately 1.4E13 protons each per cycle, with these undergoing close to 10,000 revolutions before extraction in a circulation time of 10ms. Proton beam-size shrinking between radii of 67mm and 48mm during it's acceleration through the synchrotron means proton collision energy and beamwidth will both vary in time with respect to the initial ISIS proton injection trigger, as well as due to small field fluctuations. Hence the target undergoes many proton collisions of between 650MeV and 800MeV collision energy during each dip. Furthermore due to the field changes in the synchrotron, the ISIS beam often drifts from the well-defined beam center, such that the beam centre displacement (BCD) figure recorded is only a nominal value.

As noted in [4] the target is operated through the RATS control software, allowing the user to alter both BCD and User Delay (defined from the machine start trigger + $(2^n \times 20ms) - 15ms$, with n some integer) s.t. dips travelling further to achieve lower BCD may operate with reduced User Delay to compensate.

3 MARS simulation

The design of the MICE target, in particular the surrounding structure, is defined as in Fig. 1. The presented design has been based on schematics (ref) and surveys (refs). The MICE beamline is orientated at 25 deg with respect to the ISIS beamline section where the target is located. Numerous features have been implemented

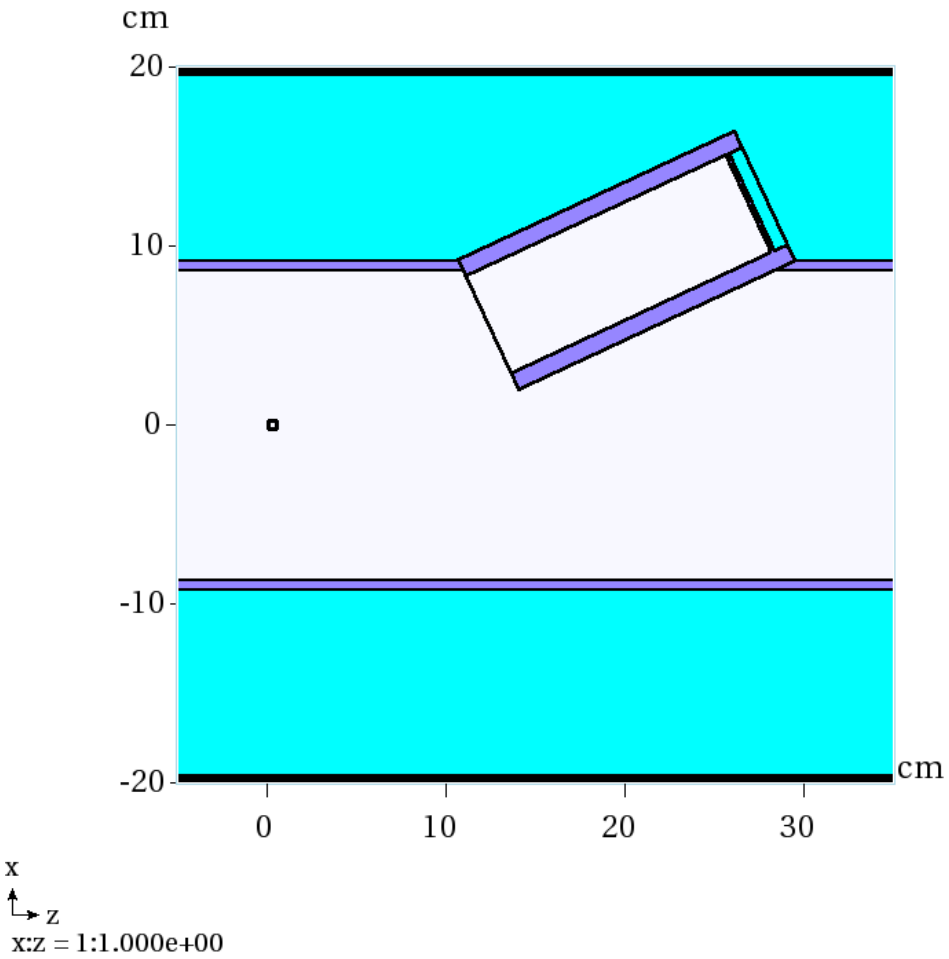

Figure 1: Design of the target in the MARS simulation. (require z=60cm?along the x-axis?)

in addition to the cylindrical bored-target structure from the previous model, including the rectangular beampipe shape and target window structure similarly oriented at 25 degrees toward the MICE beamline. The resulting pion distribution is collected as the particle flux through a surface downstream between the ISIS and MICE beamlines.

As both BCD and User Delay are altered live by the MICE operator to respond to ISIS beam drift & target deterioration in order to optimise statistics, modelling of an exact dip cycle to replicate that throughout the entire MICE data collection is difficult. Instead a number of model iterations with varying proton energy and beamwidth have been simulated to compare pion production, momentum distribution & results from downstream propagation.

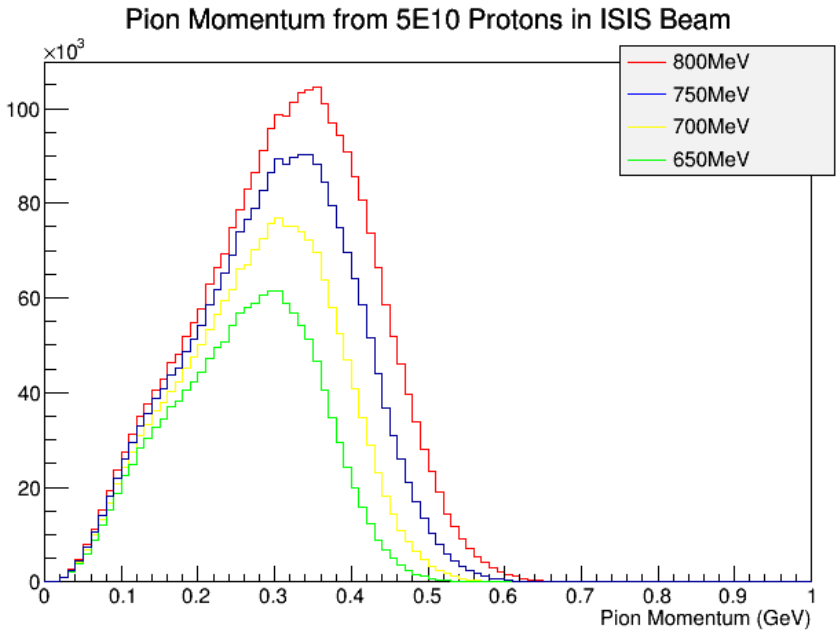

Figure 2:

4 MAUS simulation

The Monte Carlo in MICE is produced in a two-step process. In the first step a pion beam is produced according to an initial momentum distribution and is propagated using G4BL up to the bending dipole D2. After this point MAUS takes over propagating the particles (pions, muons and electrons coming from decays) through the remaining part of the beamline up to the EMR, passing through the cooling channel, according to the geometry and run selected to be simulated.

4.1 Monte Carlo and data comparison

A few figures of merit have been considered: time of flight of the particles between TOF0 and TOF1 and momentum distribution of pions and muons in the upstream tracker at station 5. Simulations have been produced for 140, 200 and 240 MeV/c nominal pionic beams, with further

5 Luminosity monitor?

Shall we produce with MARS scattered protons and compare the flux in the LM position (-25 deg, 10 meters away) with the measured one?

6 Conclusions

References

[1] https://mars.fnal.gov/

[2] MICE note #216, http://mice.iit.edu/micenotes/public/pdf/MICE0216/MICE0216.pdf

[3] MICE note #242, http://mice.iit.edu/micenotes/public/pdf/MICE0242/MICE0242.pdf

[4] MICE note #480, http://mice.iit.edu/micenotes/public/pdf/MICE0480/MICE0480.pdf

[5] ISIS Survey Drawing 1-SI-6305-031-01-D, M113 Vacuum Vessel

[6] ISIS Survey Drawing 1-SI-6305-031-02-C, M113 Vacuum Vessel

[7] ISIS Survey Drawing 1-SI-6305-031-03-C, M113 Vacuum Vessel

[8] ISIS Survey Drawing 0-SI-5100-105-04-I, Essential Geometry of ISIS

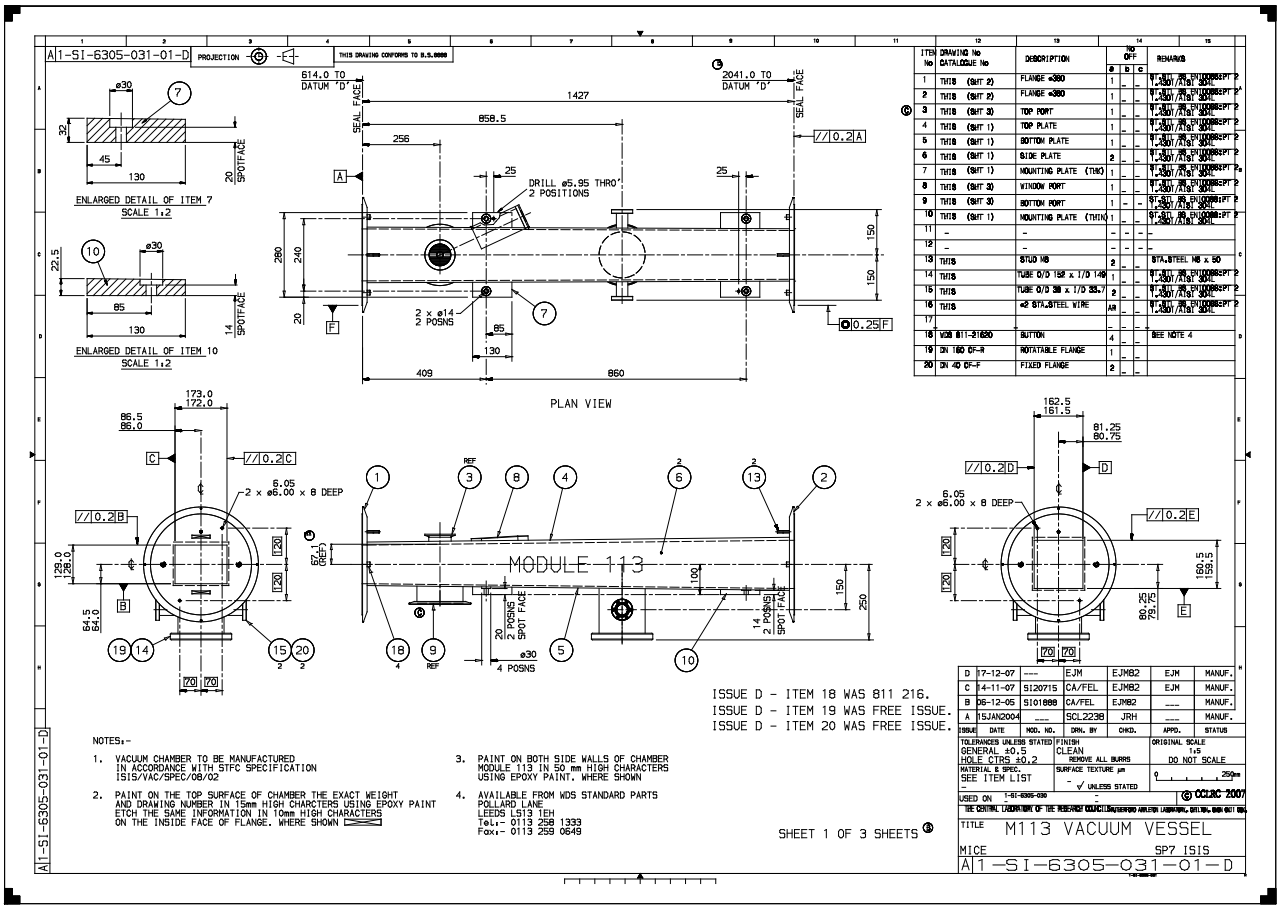

ITEM No	DRAWING No / CATALOGUE No	DESCRIPTION	No OFF	a	b	c	REMARKS
1	THIS (SHT 2)	FLANGE ø380	1	–	–		ST.STL PR EN10088PT 2 1.4301/AISI 304L
2	THIS (SHT 2)	FLANGE ø380	1	–	–		ST.STL PR EN10088PT 2 1.4301/AISI 304L
3	THIS (SHT 3)	TOP PORT	1	–	–		ST.STL PR EN10088PT 2 1.4301/AISI 304L
4	THIS (SHT 1)	TOP PLATE	1	–	–		ST.STL PR EN10088PT 2 1.4301/AISI 304L
5	THIS (SHT 1)	BOTTOM PLATE	1	–	–		ST.STL PR EN10088PT 2 1.4301/AISI 304L
6	THIS (SHT 1)	SIDE PLATE	2	–	–		ST.STL PR EN10088PT 2 1.4301/AISI 304L
7	THIS (SHT 1)	MOUNTING PLATE (THK)	1	–	–		ST.STL PR EN10088PT 2 1.4301/AISI 304L
8	THIS (SHT 3)	WINDOW PORT	1	–	–		ST.STL PR EN10088PT 2 1.4301/AISI 304L
9	THIS (SHT 3)	BOTTOM PORT	1	–	–		ST.STL PR EN10088PT 2 1.4301/AISI 304L
10	THIS (SHT 1)	MOUNTING PLATE (THIN)	1	–	–		ST.STL PR EN10088PT 2 1.4301/AISI 304L
11	–	–	–	–	–		–
12	–	–	–	–	–		–
13	THIS	STUD M8	2	–	–		STA.STEEL M8 x 60
14	THIS	TUBE O/D 152 x I/D 149	1	–	–		ST.STL PR EN10088PT 2 1.4301/AISI 304L
15	THIS	TUBE O/D 38 x I/D 33.7	2	–	–		ST.STL PR EN10088PT 2 1.4301/AISI 304L
16	THIS	ø2 STA.STEEL WIRE	AR	–	–		ST.STL PR EN10088PT 2 1.4301/AISI 304L
17	–	–	–	–	–		–
18	WDS 811-21630	BUTTON	4	–	–		SEE NOTE 4
19	DN 160 DF-R	ROTATABLE FLANGE	1	–	–		
20	DN 40 DF-F	FIXED FLANGE	2	–	–		

NOTES:-

1. VACUUM CHAMBER TO BE MANUFACTURED IN ACCORDANCE WITH STFC SPECIFICATION ISIS/VAC/SPEC/08/02
2. PAINT ON THE TOP SURFACE OF CHAMBER THE EXACT WEIGHT AND DRAWING NUMBER IN 15mm HIGH CHARCTERS USING EPOXY PAINT ETCH THE SAME INFORMATION IN 10mm HIGH CHARACTERS ON THE INSIDE FACE OF FLANGE. WHERE SHOWN
3. PAINT ON BOTH SIDE WALLS OF CHAMBER MODULE 113 IN 50 mm HIGH CHARACTERS USING EPOXY PAINT. WHERE SHOWN
4. AVAILABLE FROM WDS STANDARD PARTS POLLARD LANE LEEDS LS13 1EH Tel:- 0113 258 1333 Fax:- 0113 259 0649

ISSUE D - ITEM 18 WAS 811 216.
ISSUE D - ITEM 19 WAS FREE ISSUE.
ISSUE D - ITEM 20 WAS FREE ISSUE.

ISSUE	DATE	MOD. NO.	DRN. BY	CHKD.	APPD.	STATUS
D	17-12-07	----	EJM	EJM82	EJM	MANUF.
C	14-11-07	SI20715	CA/FEL	EJM82	EJM	MANUF.
B	06-12-05	SI01888	CA/FEL	EJM82	----	MANUF.
A	15JAN2004	----	SCL2238	JRH	----	MANUF.

TOLERANCES UNLESS STATED: GENERAL ±0.5, HOLE CTRS ±0.2
MATERIAL & SPEC.: SEE ITEM LIST
FINISH: CLEAN, REMOVE ALL BURRS
SURFACE TEXTURE µm: - √ UNLESS STATED
ORIGINAL SCALE: 1:5, DO NOT SCALE
USED ON: 1-SI-6305-030

© CCLRC 2007
THE CENTRAL LABORATORY OF THE RESEARCH COUNCILS

TITLE: M113 VACUUM VESSEL
MICE
SP7 ISIS
A1-SI-6305-031-01-D

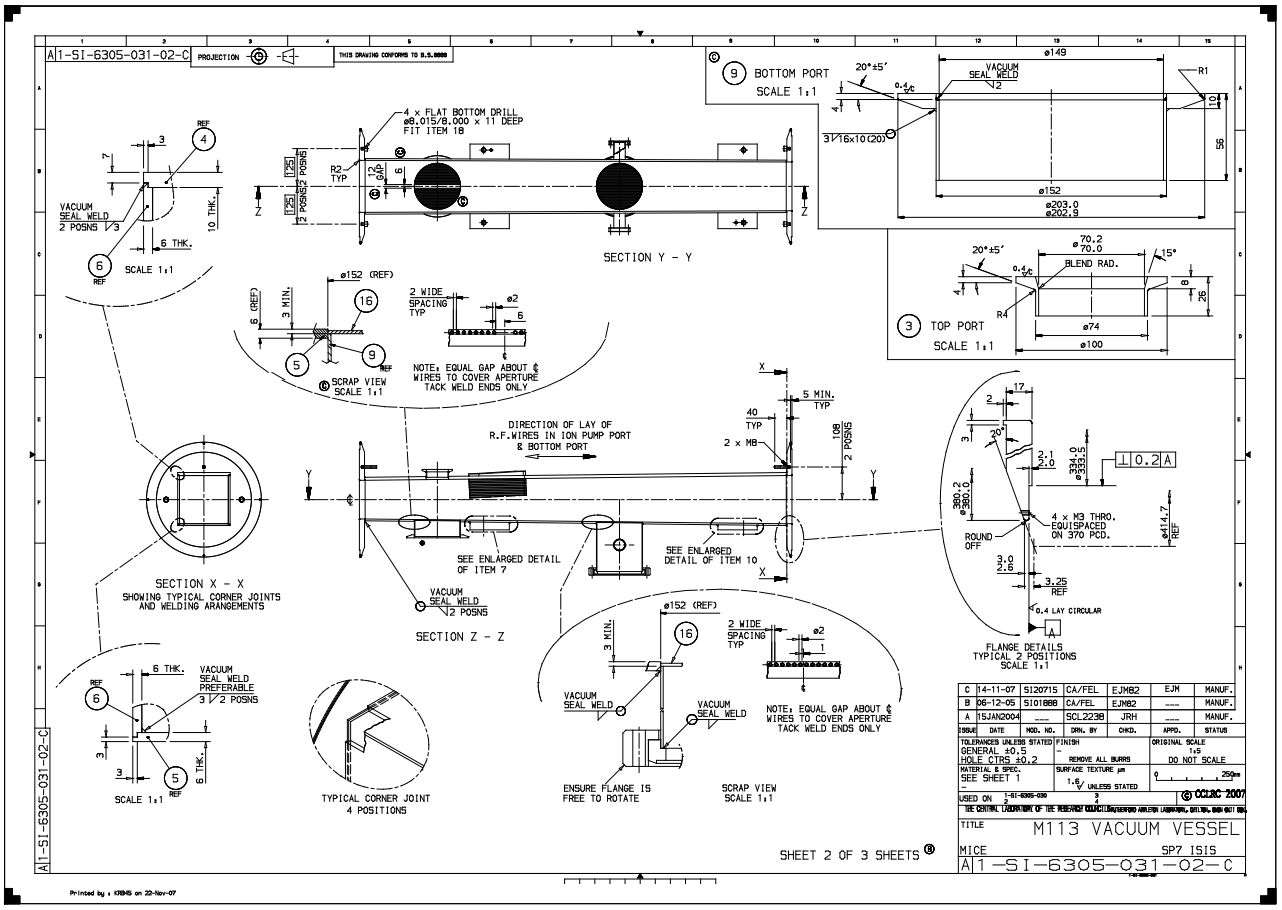
A1-SI-6305-031-02-C
PROJECTION
THIS DRAWING CONFORMS TO B.S.8888
4 x FLAT BOTTOM DRILL ø8.015/8.000 x 11 DEEP FIT ITEM 18
SECTION Y - Y
9 BOTTOM PORT SCALE 1:1
3 TOP PORT SCALE 1:1
VACUUM SEAL WELD 2 POSNS
6 THK.
SCALE 1:1
SCRAP VIEW SCALE 1:1
NOTE: EQUAL GAP ABOUT ℄ WIRES TO COVER APERTURE TACK WELD ENDS ONLY
DIRECTION OF LAY OF R.F.WIRES IN ION PUMP PORT & BOTTOM PORT
SEE ENLARGED DETAIL OF ITEM 7
SEE ENLARGED DETAIL OF ITEM 10
SECTION Z - Z
SECTION X - X
SHOWING TYPICAL CORNER JOINTS AND WELDING ARANGEMENTS
VACUUM SEAL WELD PREFERABLE 3 / 2 POSNS
TYPICAL CORNER JOINT 4 POSITIONS
ENSURE FLANGE IS FREE TO ROTATE
FLANGE DETAILS TYPICAL 2 POSITIONS
4 x M3 THRO. EQUISPACED ON 370 PCD.
ROUND OFF
0.4 LAY CIRCULAR
M113 VACUUM VESSEL
MICE
SP7 ISIS
A1-SI-6305-031-02-C
SHEET 2 OF 3 SHEETS
Printed by : KRMS on 22-Nov-07

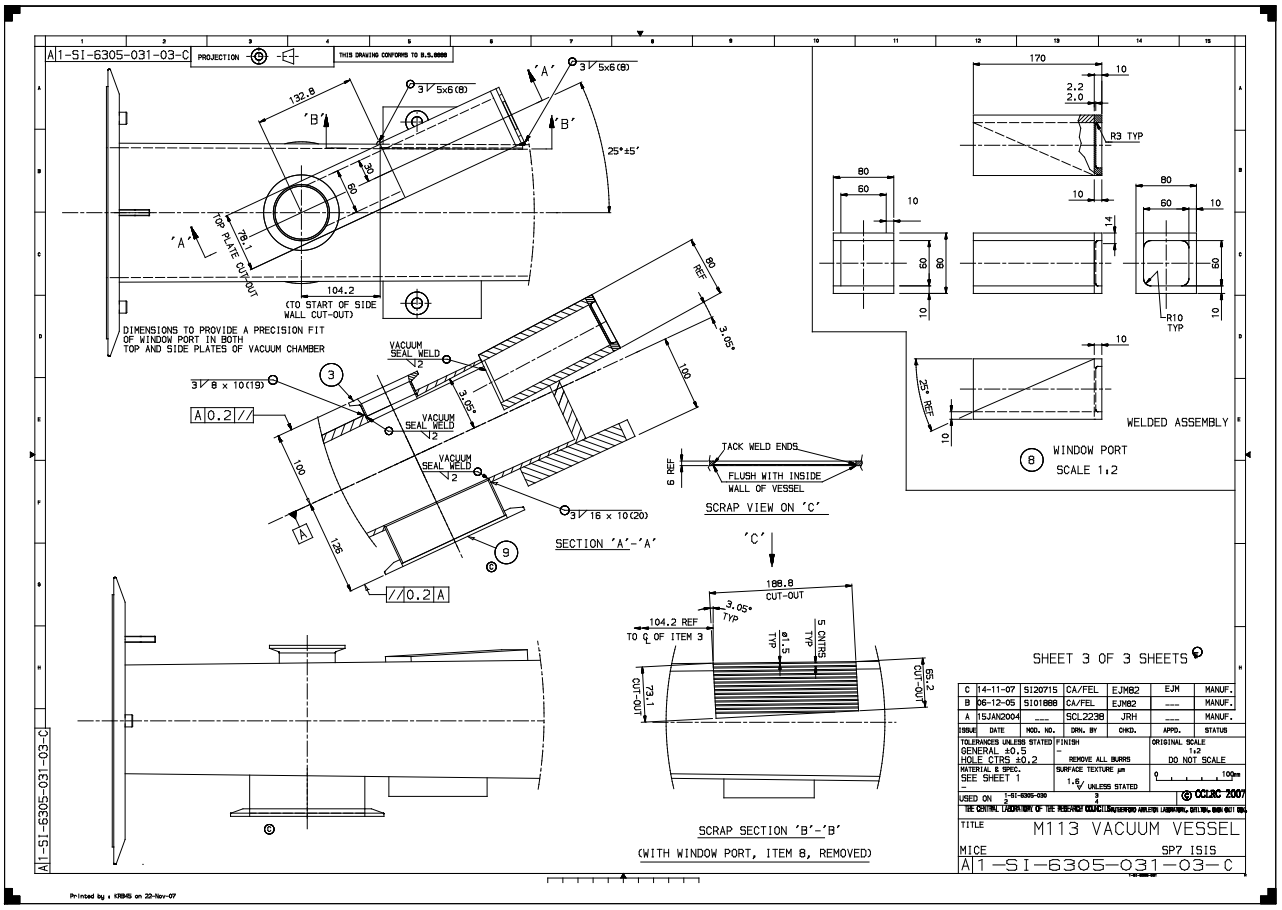
A1-SI-6305-031-03-C
PROJECTION
THIS DRAWING CONFORMS TO B.S.8888
DIMENSIONS TO PROVIDE A PRECISION FIT OF WINDOW PORT IN BOTH TOP AND SIDE PLATES OF VACUUM CHAMBER
TOP PLATE CUT-OUT
104.2
(TO START OF SIDE WALL CUT-OUT)
25°±5'
VACUUM SEAL WELD
SECTION 'A'-'A'
TACK WELD ENDS
FLUSH WITH INSIDE WALL OF VESSEL
SCRAP VIEW ON 'C'
WELDED ASSEMBLY
WINDOW PORT
SCALE 1:2
R3 TYP
R10 TYP
SCRAP SECTION 'B'-'B'
(WITH WINDOW PORT, ITEM 8, REMOVED)
SHEET 3 OF 3 SHEETS
C 14-11-07 SI20715 CA/FEL EJM82 EJM MANUF.
B 06-12-05 SI01888 CA/FEL EJM82 --- MANUF.
A 15JAN2004 --- SCL2238 JRH --- MANUF.
ISSUE DATE MOD. NO. DRN. BY CHKD. APPD. STATUS
TOLERANCES UNLESS STATED GENERAL ±0.5 HOLE CTRS ±0.2
FINISH REMOVE ALL BURRS
ORIGINAL SCALE 1:2 DO NOT SCALE
MATERIAL & SPEC. SEE SHEET 1
SURFACE TEXTURE µm 1.6 UNLESS STATED
USED ON 1-SI-6305-030
© CCLRC 2007
TITLE M113 VACUUM VESSEL
MICE SP7 ISIS
A1-SI-6305-031-03-C
Printed by : KRBMS on 22-Nov-07

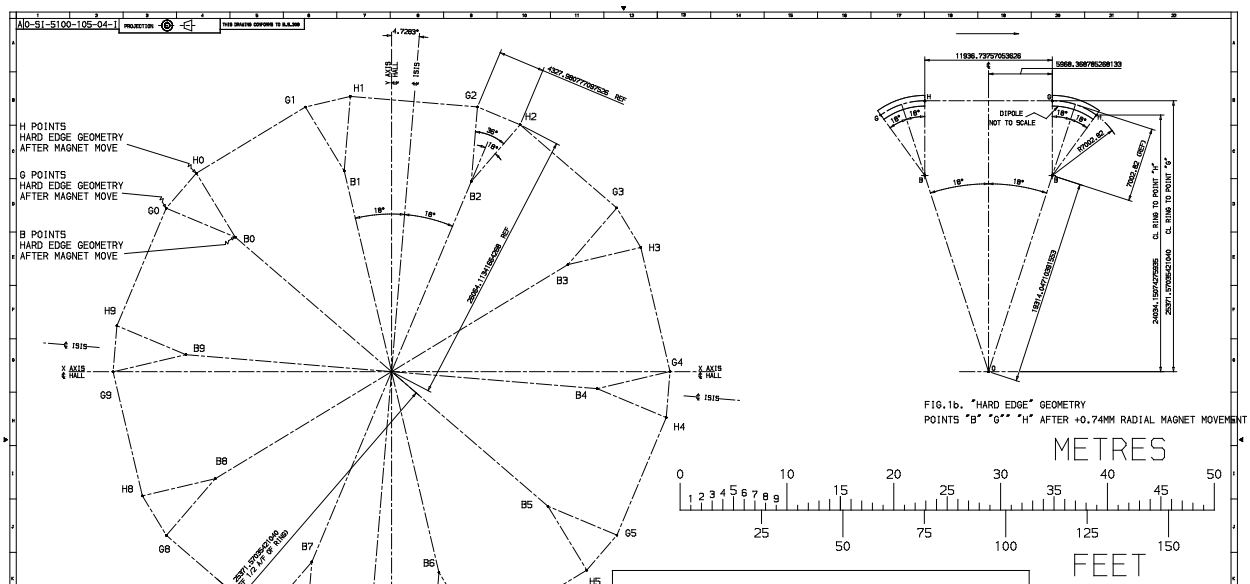

FIG.1b. "HARD EDGE" GEOMETRY
POINTS "B" "G"" "H" AFTER +0.74MM RADIAL MAGNET MOVEMENT

"B" AND "G" AND "H" POINTS
HARD EDGE GEOMETRY
AFTER RADIAL MAGNET MOVE 0.74MM
FOR X,Y,Z COORDINATES SEE RING GEOMETRY TABLE
SEE SHEET 1 FOR OVERALL VIEW OF ISIS

RING GEOMETRY

SUPER PERIOD	CO-ORDINATES IN METRES ALL WITH Z OF -0.603					
	B		G		H	
0	X	-14.6364196374051	X	-21.0954522264142	X	-18.2715625415826
0	Y	12.6018901649732	Y	15.307511344392	Y	18.5873077793597
1	X	-4.43390703348312	X	-8.06904993766055	X	-3.8566592173969
1	Y	18.7982149139405	Y	24.7836325283271	Y	25.7772028714615
2	X	7.46220735427222	X	8.03945517035917	X	12.03135684481
2	Y	17.8142604936077	Y	24.7932484511287	Y	23.1210826015664
3	X	16.508012163795	X	21.0771616543328	X	23.3238035230774
3	Y	10.0258640491613	Y	15.3326861571199	Y	11.6334946345667
4	X	19.2483174134448	X	26.0641087727272	X	25.7073500024538
4	Y	-1.59207169547918	Y	1.55588899262629E-02	Y	-4.29769287489788
5	X	14.6364196374051	X	21.0954522264142	X	18.2715625415826
5	Y	-12.6018901649732	Y	-15.307511344392	Y	-18.5873077793597
6	X	4.43390703348312	X	8.06904993766054	X	3.8566592173962
6	Y	-18.7982149139405	Y	-24.7836325283271	Y	-25.7772028714615
7	X	-7.46220735427223	X	-8.03945517035918	X	-12.03135684481
7	Y	-17.8142604936077	Y	-24.7932484511287	Y	-23.1210826015664
8	X	-16.508012163795	X	-21.0771616543328	X	-23.3238035230774
8	Y	-10.0258640491613	Y	-15.3326861571199	Y	-11.6334946345667
9	X	-19.2483174134448	X	-26.0641087727272	X	-25.7073500024538
9	Y	1.59207169547918	Y	-1.55588899262545E-02	Y	4.29769287489788

ISSUE	DATE	MOD. NO.	DRN. BY	CHKD.	APPD.	STATUS
1	19-OCT-98	S100805	JOLLIFFE	JAH	—	MANUF.

TOLERANCES UNLESS STATED
GENERAL ±0.5
HOLE CIRS ±0.2
MATERIAL & SPEC.
MAT'L
SPEC.
FINISH
CLEAN
REMOVE ALL BURRS
SURFACE TEXTURE µm
1.6 UNLESS STATED
ORIGINAL SCALE
1:100
DO NOT SCALE
MODULE 1998
TITLE ESSENTIAL GEOMETRY OF ISIS
ISIS
A0-SI-5100-105-04-1