Smart Air Quality Monitoring System Using IoT

Piyush Gaikwad
Electrical Engineering
Walchand College of Engineering, Sangli
Maharashtra, India

***Abstract*—Air pollution has become a major environmental concern affecting human health and quality of life. This paper presents a smart air quality monitoring and pollution detection system using Internet of Things (IoT) technology. The system utilizes multiple sensors to measure environmental parameters such as gas concentration, temperature, humidity, and particulate matter. The collected data is processed using a microcontroller and transmitted to an online platform for real-time monitoring and analysis. The Air Quality Index (AQI) is calculated based on sensor data to provide an understandable indication of pollution levels. The system also enables visualization of data trends and alerts when pollution exceeds safe limits. This solution is cost-effective, portable, and suitable for continuous environmental monitoring in urban and industrial areas.**

I. Introduction

Air pollution is one of the most critical environmental issues affecting human health, ecosystems, and climate worldwide. Rapid industrialization, urbanization, and increased vehicular emissions have significantly contributed to the deterioration of air quality, especially in developing countries like India. Poor air quality can lead to severe health problems such as respiratory diseases, cardiovascular disorders, and reduced life expectancy.

Traditional air quality monitoring systems are often expensive, bulky, and limited to specific locations, making them unsuitable for widespread deployment. These limitations create a need for a cost-effective, portable, and real-time monitoring solution that can be deployed in multiple locations.

In this project, a smart air quality monitoring and pollution detection system using Internet of Things (IoT) technology is proposed. The system integrates various sensors to measure environmental parameters such as gas concentration, temperature, humidity, and particulate matter. A microcontroller processes the sensor data and transmits it to an online platform for real-time visualization and analysis.

The system also calculates the Air Quality Index (AQI), which provides a simplified representation of air pollution levels. Additionally, it enables users to monitor trends over time and receive alerts when pollution levels exceed safe limits.

Furthermore, this work aligns with the United Nations Sustainable Development Goals (SDGs), particularly SDG 3 (Good Health and Well-being) by promoting awareness of air pollution and its health impacts, SDG 11 (Sustainable Cities and Communities) by enabling better urban air quality management, and SDG 13 (Climate Action) by supporting environmental monitoring and data-driven decision-making.

A. System Overview

The overall architecture of the proposed system is shown in Fig. 1. The system consists of multiple sensors for measuring air quality parameters, a microcontroller for data processing, and a communication module for transmitting data to an online platform.

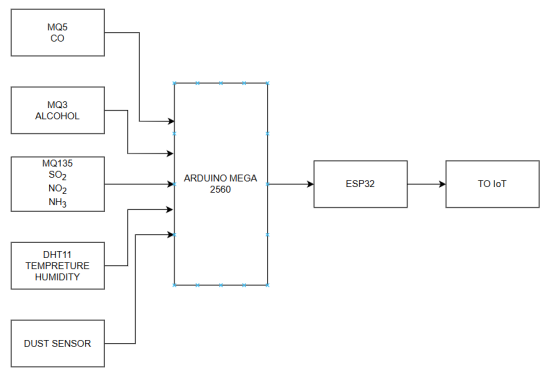

Fig. 1. Block diagram of the proposed air quality monitoring system

B. Sensors Used

The system uses multiple sensors to monitor environmental parameters:

- **MQ135**: Used for detecting air quality including gases such as CO_2, NH_3, and NO_x.
- **MQ5**: Used for detecting LPG, methane, and other combustible gases.
- **MQ3**: Used for detecting alcohol vapors.
- **Temperature and Humidity Sensor**: Used to measure ambient temperature and humidity, which affect air quality.
- **Dust Sensor (GP2Y1010AU0F)**: Used to measure particulate matter concentration in air.

C. Sensor Calibration

Sensor calibration is essential for obtaining accurate measurements. Each gas sensor was calibrated to determine its baseline resistance (R_0) in clean air conditions.

The calibration process involved recording sensor values in a controlled environment and calculating the R_0 values using standard formulas. These values were then used to compute gas concentrations during operation.

The dust sensor was calibrated using its datasheet relationship between output voltage and dust density. Offset voltage and scaling factors were applied to obtain accurate particulate matter measurements.

Proper calibration improves system accuracy and ensures reliable AQI calculation.

D. Circuit Diagram

The circuit diagram of the system is shown in Fig. 2. The sensors are connected to the analog input pins of the microcontroller. The ESP32 module is used for wireless communication.

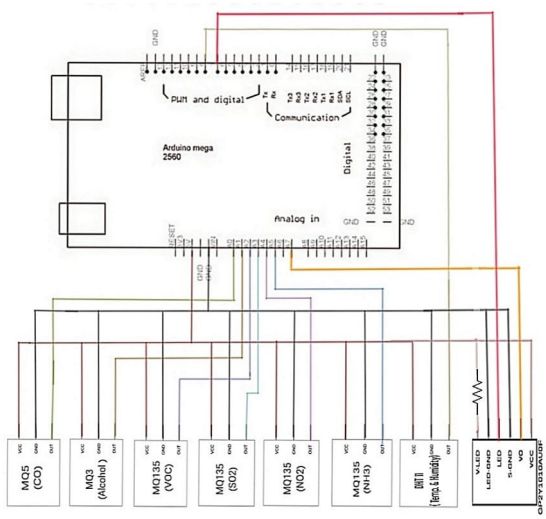

Fig. 2. Circuit diagram of the air quality monitoring system

E. Mathematical Modelling of AQI

The Air Quality Index (AQI) is calculated using the standard breakpoint formula:

$$AQI = \frac{I_H - I_L}{C_H - C_L}(C - C_L) + I_L \tag{1}$$

where:

- C = measured pollutant concentration
- C_L, C_H = concentration breakpoints
- I_L, I_H = AQI breakpoints

The AQI is classified into categories such as Good, Moderate, Poor, Very Poor, and Hazardous based on standard ranges defined by environmental agencies.

F. Data Transmission and IoT Integration

The collected sensor data is processed by the microcontroller and transmitted to an IoT platform using the ESP32 module. The communication is established using Wi-Fi and HTTP protocol.

The data is sent at regular intervals and includes parameters such as gas concentration, temperature, humidity, and AQI. The IoT platform stores the data and provides real-time visualization through graphs and dashboards.

Alerts are generated when AQI exceeds predefined thresholds, enabling timely action. This remote monitoring capability enhances usability and accessibility of the system.

G. Software Flow Diagrams

The software implementation of the system is divided into two parts: Arduino Mega for data acquisition and processing, and ESP32 for wireless communication and IoT data transmission.

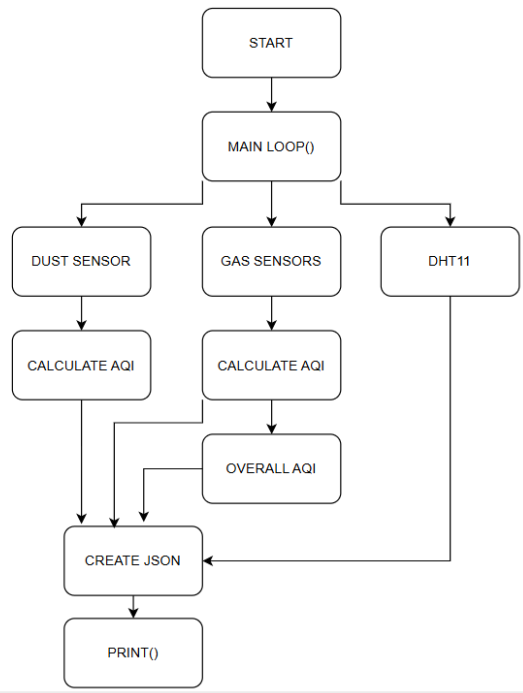

Fig. 3. Flowchart of Arduino Mega operation

1) Arduino Mega Flow:

2) ESP32 Flow: The Arduino Mega is responsible for sensor data acquisition, calibration, and AQI computation. The ESP32 handles wireless communication and transmits the processed data to the IoT platform. This separation of tasks improves system efficiency and reliability.

II. Results and Discussion

The system was tested under various environmental conditions, and real-time data was visualized using a cloud-based dashboard. The system provides real-time monitoring through a cloud dashboard. The data can be accessed remotely via the web interface at `https://aqmp.nonrender.com/`, enabling users to track AQI trends and receive alerts. The results indicate that the system successfully computes AQI values and tracks variations in pollutant levels. The dashboard displays real-time AQI along with individual pollutant contributions. Data filtering and averaging techniques improve measurement stability and reduce noise. The system demonstrates reliable performance for continuous environmental monitoring.

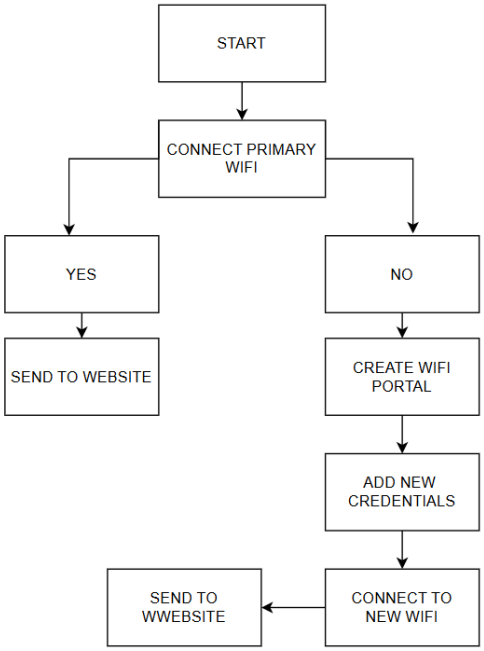

Fig. 4. Flowchart of ESP32 data transmission

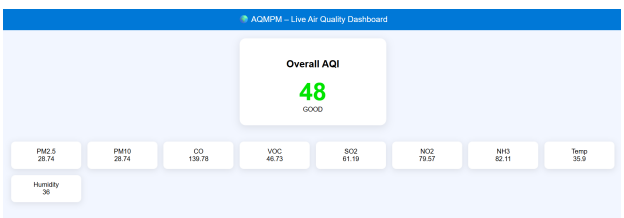

Fig. 5. AQI Dashboard

A. Data Processing and Analysis

The proposed system follows a structured approach for data acquisition, processing, transmission, and analysis:

1) **Data Collection:** Environmental data is collected using multiple sensors, including gas sensors (MQ series), a particulate matter sensor, and temperature and humidity sensors. The sensor data is acquired through the microcontroller (Arduino Mega 2560/ESP32).
2) **Data Processing:** The collected sensor data is processed to determine pollutant concentrations. The Air Quality Index (AQI) is computed using standard formulas based on pollutant levels. Temperature and humidity measurements are also considered to analyze environmental effects on air quality.
3) **Data Transmission:** The processed data is transmitted over the Internet using IoT platforms such as ThingSpeak or Adafruit IO. Data transmission occurs at regular intervals, typically every 20 seconds.
4) **Data Analysis:** The collected data is analyzed using graphical and statistical methods:
   - **Time vs AQI Analysis:** A time-series graph is used to observe AQI variations over time and identify peak pollution periods.
   - **Day vs AQI Analysis:** Daily average AQI values are computed and represented using bar graphs.
   - **AQI vs Temperature Analysis:** A correlation graph is used to study the impact of temperature on AQI.
   - **AQI vs Humidity Analysis:** The relationship between humidity and air quality is analyzed using graphical methods.
5) **Threshold-Based Event Detection:** A predefined AQI threshold (e.g., AQI ¿ 60) is used to detect moderate pollution levels. Alerts are generated with timestamps whenever the AQI exceeds this threshold.

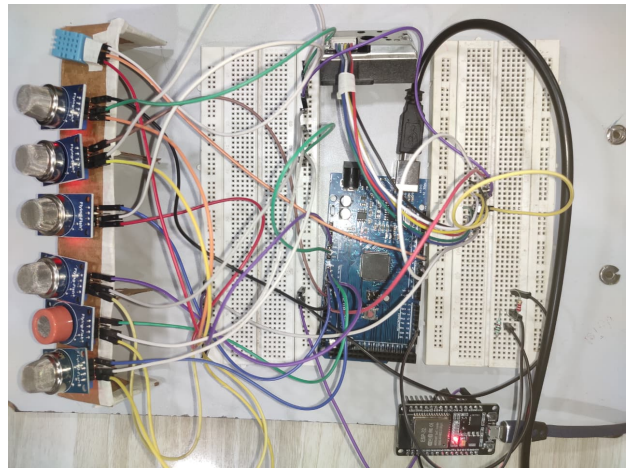

Fig. 6. Prototype Hardware Setup of the Air Quality Monitoring System

III. Conclusion

This paper presented a smart air quality monitoring and pollution detection system using IoT technology. The system successfully integrates multiple sensors to measure environmental parameters such as gas concentration, temperature, humidity, and particulate matter. The collected data is processed to compute the Air Quality Index (AQI), providing a simplified representation of air pollution levels.

The implementation of real-time data transmission through IoT platforms enables continuous monitoring and remote accessibility. The system also incorporates data analysis techniques and threshold-based alert mechanisms to identify critical pollution levels.

The proposed solution is cost-effective, portable, and suitable for deployment in urban and industrial environments. It contributes to improved environmental awareness and supports data-driven decision-making. Furthermore, the system aligns with Sustainable Development Goals (SDGs) related to health, sustainable cities, and climate action.

Future work can include integration of additional sensors, improved calibration techniques, machine learning-based prediction of air quality trends, and development of a mobile application for enhanced user interaction.